APPENDIX C

EXAMPLE PROBLEMS

Includes example problems dealing with the following:

1. Cellular Cofferdam on Rock
2. Cellular Retaining Wall on Sand
3. Cellular Retaining Wall on Clay

Cellular Cofferdam on Rock

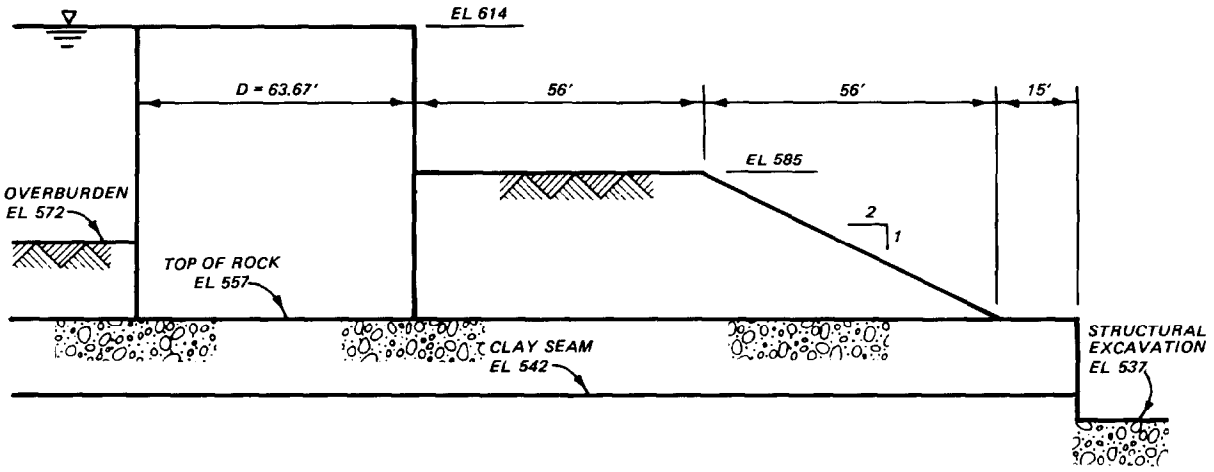

DESIGN DATA

Dia of cell, D = 63.67' ; effective width, B = 53.06'
Guaranteed piling interlock strength, tg = 16,000 PLI

Cell Fill, Overburden and Berm Properties:

$\phi = 30°$, $\tan \phi = 0.577$

$\gamma = 110$ pcf (moist)

$\gamma' = 72.5$ pcf (submerged)

$$K_a = \frac{1 - \sin \phi}{1 + \sin \phi} = \frac{1 - 0.50}{1 + 0.50} = 0.33; \quad K_p = \frac{1 + \sin \phi}{1 - \sin \phi} = \frac{1 + 0.50}{1 - 0.50} = 3.00$$

$$p_a = \gamma K_a = 110(0.33) = 36.7 \text{ psf/ft}$$

$$p'_a = \gamma' K_a = 72.5(0.33) = 24.2 \text{ psf/ft} \; ; \quad p'_p = \gamma' K_p = 72.5(3.00) = 217.5 \text{ psf/ft}$$

Rock and Clay Seam Properties:

γ = 155 pcf

ϕ^{rock} = 20° , tan ϕ = 0

c = 750 psf

Coefficient of Friction:

Soil on rock, tan ϕ = 0.50

Steel on steel at interlocks, f = 0.30

LOADING

Service Condition - Water to top of cell; cell fill saturated to top of berm; berm saturated

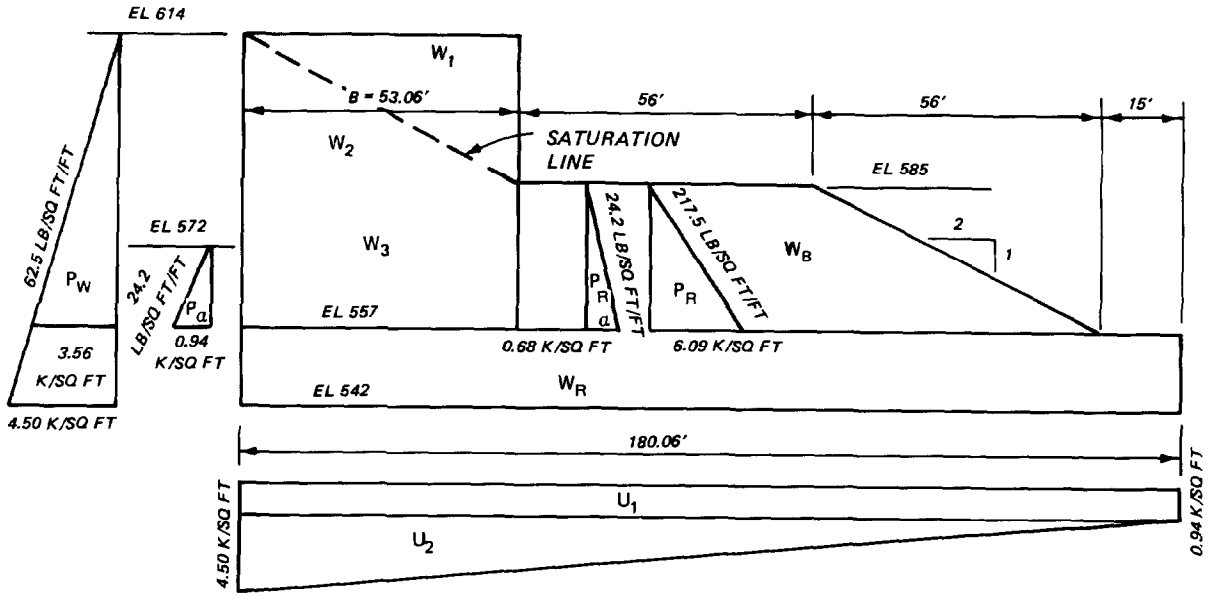

SLIDING STABILITY

El 557 w/o Berm

		W	H
W_1	[illegible]	[illegible]	
W_2	$1/2 \times 53.06 \times 28 \times 0.0725$	55.8	
W_3	$53.06 \times 28 \times 0.0725$	107.7	
P_a	$1/2 \times 0.36 \times 15$		$\rightarrow$ 2.7
P_w	$1/2 \times 3.56 \times 57$		$\rightarrow$ 101.5
		248.1^k	$\rightarrow$ 104.2^k

$$(P_{i-1} - P_i) = \frac{\left[(W_i + V_i)\cos\alpha_i - U_i + \left(H_{L_i} - H_{R_i}\right)\sin\alpha_1\right]\dfrac{\tan\phi_i}{FS_i}}{\cos\alpha_i - \sin\alpha_i\left(\dfrac{\tan\phi_i}{FS_i}\right)}$$

$$- \frac{\left(H_{L_i} - H_{R_i}\right)\cos\alpha_i + (W_i + V_i)\sin\alpha_i + \dfrac{C_i}{FS_i}(L_i)}{\cos\alpha_i - \sin\alpha_i\left(\dfrac{\tan\phi_i}{FS_i}\right)}$$

Solve for FS when $i = 1$, $H_{R_i} = 0$, $V_1 = 0$, $\alpha_1 = 0$ and $c = 0$

$$FS = \frac{W \tan\phi}{H_{L_i}} = \frac{248.1(0.50)}{104.2} = 1.19 < 1.50 \quad \text{berm required.}$$

El 557 w/Berm

$$W_B = \left(\frac{56 + 112}{2}\right)(28)(0.0725) = 170.5^k$$

Sliding resistance of berm on rock = 170.5(0.50) = 85.3^k

Passive resistance of berm, P_R = l/2(6.09)(28) = 85.3^k

Passive failure of berm will occur concurrent w/sliding of entire berm on rock.

$$FS = \frac{(W + W_B)\tan\phi}{H_{L_1}} = \frac{(248.1 + 170.5)(0.50)}{104.2} = 2.01 > 1.50 \quad \text{ok}$$

El 542

		W	H
w_1	See Page 2	84.6	
w_2	"	55.8	
w_3	"	107.7	
w_B	See above	170.5	
w_R	180.06 x 15 x 0.155	418.6	
v_1	0.94 x 180.06	-169.3	
v_2	1/2 x 3.56 x 180.06	-320.5	
P_a	See Page 2		→ 2.7
p_w	1/2 x 4.50 x 72		16l.0
		347.4^k	→ 164.7^k

$$FS = \frac{W\tan\phi + cL}{H_{L_1}} = \frac{347.4(0.364) + 0.75(180.06)}{164.7} = 1.59 > 1.50 \quad \text{ok}$$

OVERTURNING STABILITY

El 557

		W	H	Arm	+ M
W_1	See Page 2	84.6		17.69	1,497
W_2	"	55.8		35.37	1,974
W_3	"	107.7		26.53	2,857
P_a	"		→ 2.7	5.00	-14
P_w	"		→ 101.5	19.00	-1,929
P_{R_a}	1/2 × 0.68 × 28		← 9.5	9.33	89
		248.1^k	→ 94.7^k		$4,474^{ft-k}$

M/W = 18.03
B/3 = 17.69
0.34' inside kern ok

VERTICAL SHEAR RESISTANCE

$$K_{C_{cell}} = \frac{\cos^2 \phi}{2 - \cos^2 \phi} = \frac{0.75}{2 - 0.75} = 0.60$$

$\phi = 30°$

$p = \gamma K = 110(0.60) = 66.0$ psf/ft $\qquad p' = \gamma' K = 72.5(0.60) = 43.5$ psf/ft

$K_{\substack{\text{inboard}\\ \text{sheeting}}} = 1.6K_a = 1.6(0.33) = 0.53$

$p = \gamma K = 110(0.53) = 58.3$ psf/ft $\qquad p' = \gamma' K = 72.5(0.53) = 38.4$ psf/ft

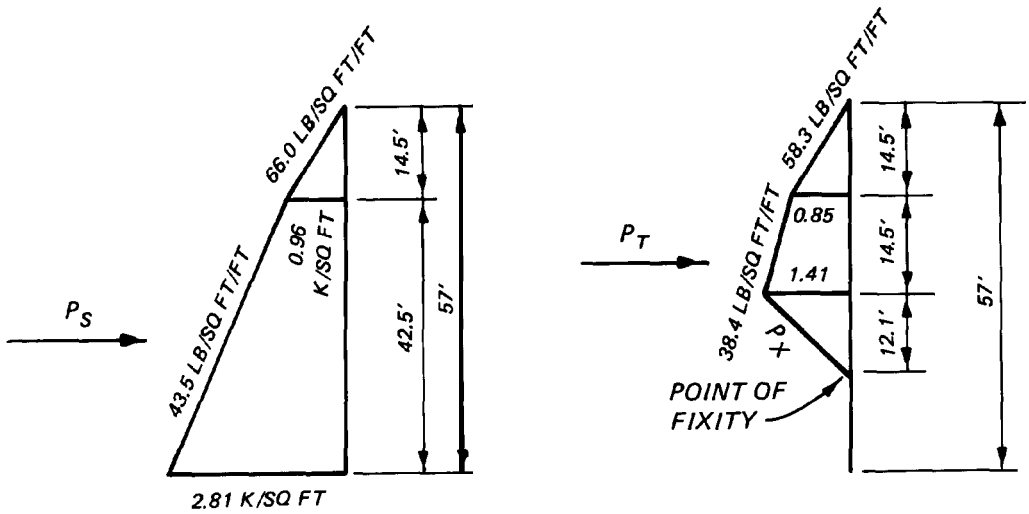

VERTICAL PLANE ON CENTER LINE OF CELL

INBOARD SHEETING

Point of Fixity:

$$p_x = p'_p - (p' + p_w) = 217.5 - (38.4 + 62.5) = 116.6 \text{ psf/ft}$$

$$h = \frac{1.41}{0.1166} = 12.1'$$

$$H' = 14.5 + 14.5 + 12.1 = 41.1' \;, \quad H'/4 = 10.3'$$

use 12.1'

$$P_s = 1/2(0.96)(14.5) + 1/2(0.96 + 2.81)(42.5) = 87.1^{k/ft}$$

$$P_T = 1/2(0.85)(14.5) + 1/2(0.85 + 1.41)(14.5) + 1/2(1.41)(12.1) = 31.1^{k/ft}$$

$$Q = \frac{3M}{2B} = \frac{3[P_w(H_w/3) + P_a(H_s/3) - P_R(H_B/3)]}{2B}$$

$$= \frac{3[101.5(19.00) + 2.7(5.00) - 85.3(9.33)]}{2(53.06)} = 32.4^{k/ft}$$

$$FS = \frac{P_s \tan\phi + fP_T}{Q} = \frac{87.1(0.577) + 0.3(31.1)}{32.4} = 1.84 > 1.50 \qquad \text{ok}$$

HORIZONTAL SHEAR RESISTANCE

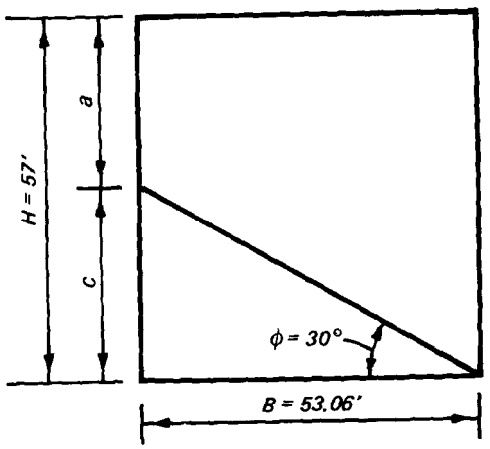

$C = B \tan \phi = 30.5'$

$a = H - c = 26.5'$

Assume entire cell saturated.

$$M_r = \frac{\gamma' a c^2}{2} + \frac{\gamma' c^3}{3} = \frac{0.0725(26.5)(30.5)^2}{2} + \frac{0.0725(30.5)^3}{3}$$

$$= 1{,}579^{ft-k}$$

$$M_f = P_T f B = 31.1(0.30)(53.06) = 495^{ft-k}$$

$$M_o = P_w(H_w/3) + P_a(H_s/3) = 101.5(19.00) + 2.7(5.00) = 1{,}943^{ft-k}$$

$$FS = \frac{M_r + M_f + P_R(H_B/3)}{M_o} = \frac{1{,}579 + 495 + 85.3(9.33)}{1{,}943} = 1.48 \cong 1.50 \qquad \text{ok}$$

INTERLOCK TENSION

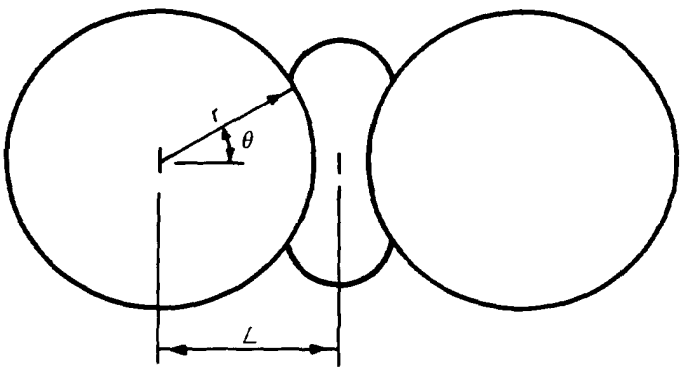

r = 31.83′
θ = 30°
L = 37.76′

$$t_{max} = pL$$

$$= \frac{1.41}{12}(37.76) = 4.44 \text{ k/Lin. in.}$$

$$FS = \frac{tg}{t_{max}} = \frac{16.0}{4.44} = 3.6 > 2.0 \quad \text{ok}$$

HANSEN'S METHOD

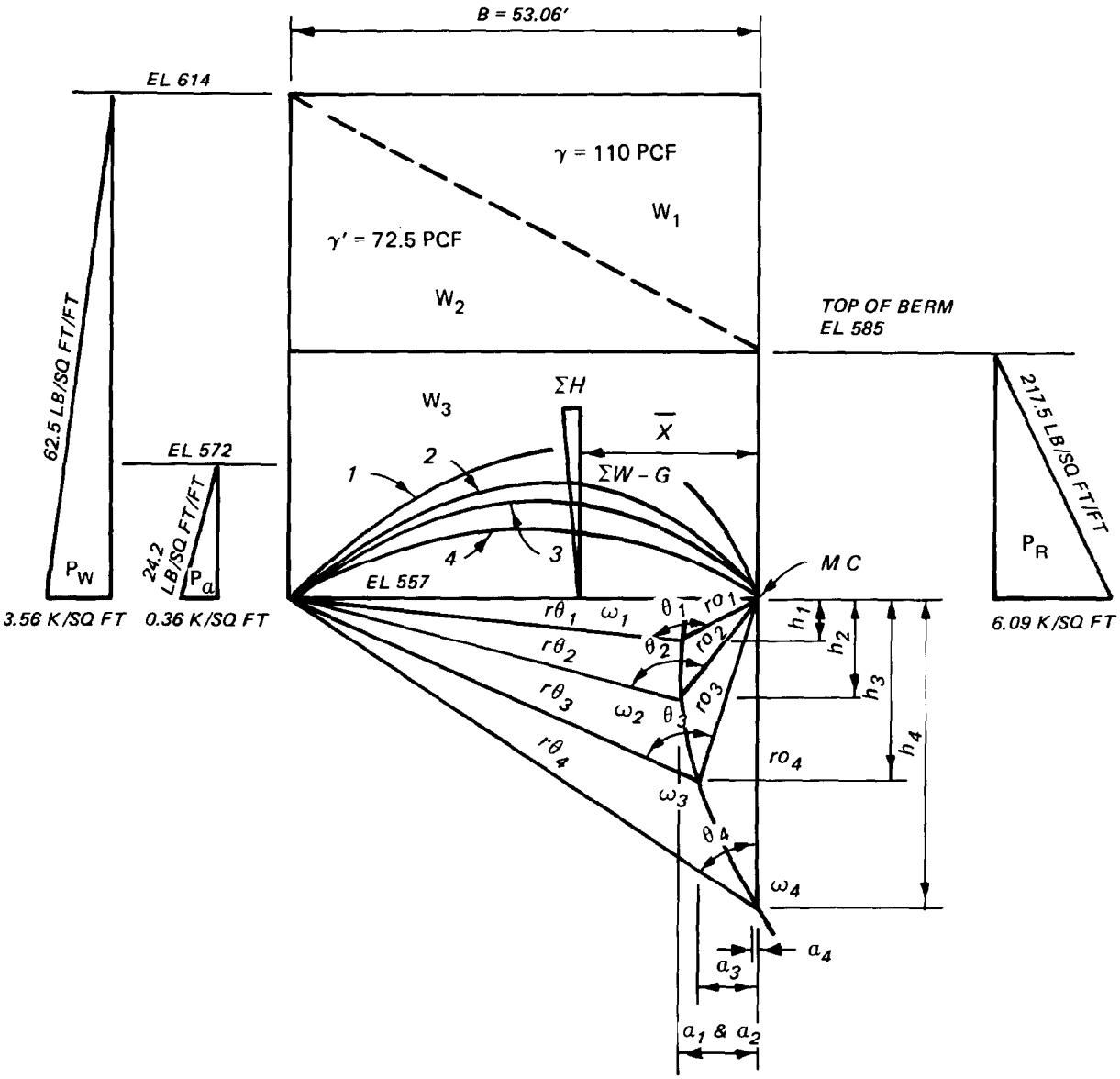

Try θ_3 = 1.5 rad. , ϕ = 30°

$$\frac{r_{\theta_3}}{r_{o_3}} = e^{\theta_3 \tan \phi} = 2.37$$

r_{θ_3} = 52' , r_{o_3} = 22' , h_3 = 20.5' , a_3 = 7.0'

$$G = \gamma A = \gamma' \left(\frac{r_{\theta_3}^2 - r_{o_3}^2}{4 \tan \phi} - \frac{Bh_3}{2} \right)$$

$$= 0.0725 \left[\frac{(52)^2 - (22)^2}{4(0.577)} - \frac{53.06(20.5)}{2} \right] = 30^k$$

		W	H	Arm	M (+)
W_1	See Page 3	84.9		17.69	1,497
W_2	"	55.8		35.37	1,974
W_3	"	107.7		26.53	2,857
G		-30.0		26.53 (1)	-786
P_a	See Page 3		→ 2.7	5.00	-14
P_w	"		→ 101.5	19.00	-1,929
P_R	1/2 × 6.09 × 28		← 85.3	9.33	796
		218.4^k	→ 18.9^k		$4,385^{ft-k}$

$\bar{x} = 20.0'$

(1) Approximate.

$$M_R = 84.9(17.69 - 7.0) + 55.8(35.37 - 7.0) + 107.7(26.53 - 7.0)$$

$$-30.0(26.53 - 7.0) + 85.3(9.33 + 20.5) = 6,553^{ft-k}$$

$$M_o = 2.7(5.00 + 20.5) + 101.5(19.00 + 20.5) = 4,078^{ft-k}$$

$$FS = \frac{M_R}{M_o} = \frac{6,553}{4,078} = 1.61 > 1.5 \quad \text{ok}$$

Summary

	θ	r_o *	r_θ *	h	a *	G	$\bar{x}$	M_R	M_o	FS
1	2.5	10	42	5.0	10.0	43	19.7	4,575	2,463	1.86
2	2.0	14	44	11.5	10.0	33	20.0	5,130	3,141	1.63
3	1.5	22	52	20.5	7.0	30	20.0	6,553	4,078	1.61
4	1.0	36	64	35.0	0.5	20	20.4	9,208	5,589	1.65

* Scaled value.

Cellular Retaining Wall on Sand

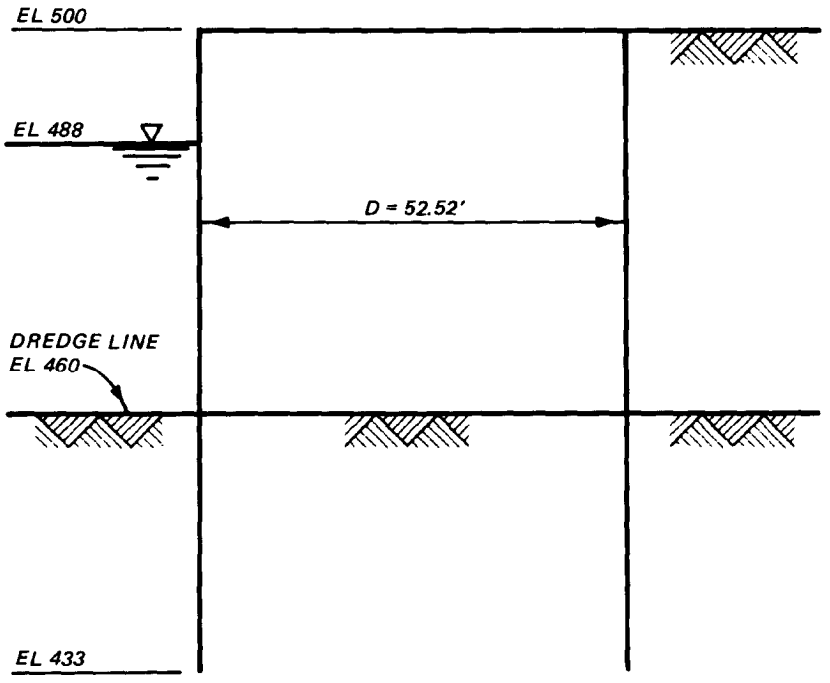

DESIGN DATA

Dia of cell, D = 52.52' ; effective width, B = 43.99'
Guaranteed piling interlock strength, tg = 16,000 PLI

Cell Fill, Backfill, and Overburden Properties:

$\phi = 30°$, $\tan \phi = 0.577$

$\gamma = 110$ pcf (moist)

$\gamma' = 70$ pcf (submerged)

$$K_a = \frac{1 - \sin \phi}{1 + \sin \phi} = \frac{1 - 0.50}{1 + 0.50} = 0.33 \; ; \quad K_p = \frac{1 + \sin \phi}{1 - \sin \phi} = \frac{1 + 0.50}{1 - 0.50} = 3.00$$

$$p_a = \gamma K_a = 110(0.33) = 36.7 \text{ psf/ft}$$

$$p'_a = \gamma' K_a = 70(0.33) = 23.3 \text{ psf/ft} \; ; \quad p'_p = \gamma' K_p = 70(3.00) = 210.0 \text{ psf/ft}$$

Coefficient of Friction:

Soil on steel, $\tan \phi = 0.40$

Steel on steel at interlocks, $f = 0.30$

LOADING

Service Condition - Cell fill and backfill both saturated to el 500. Pool at el 480.

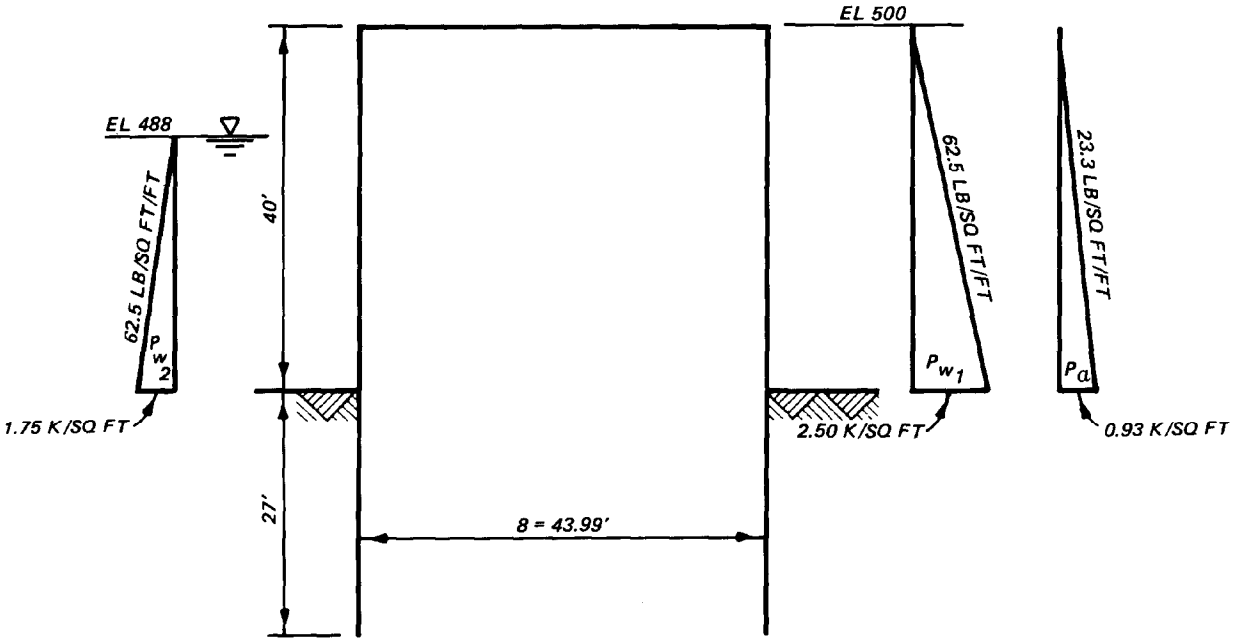

VERTICAL SHEAR RESISTANCE

$$K_{C_{cell}} = \frac{\cos^2 \phi}{2 - \cos^2 \phi} = \frac{0.75}{2 - 0.75} = 0.60$$

$\phi = 30°$

$p' = \gamma' K = 70(0.60) = 42.0$ psf/ft

$K_{\substack{outboard \\ sheeting}} = 1.4K_a = 1.4(0.33) = 0.46$

$p = \gamma' K + \gamma_w = 70(0.46) + 62.5 = 94.7$ psf/ft

$p' = \gamma' K = 70(0.46) = 32.2$ psf/ft

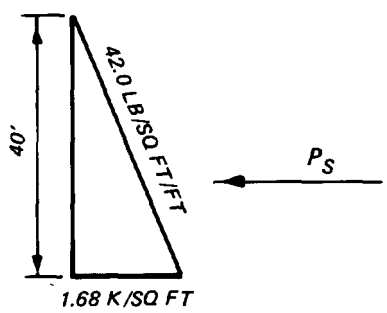

VERTICAL PLAN ON CENTER LINE OF CELL

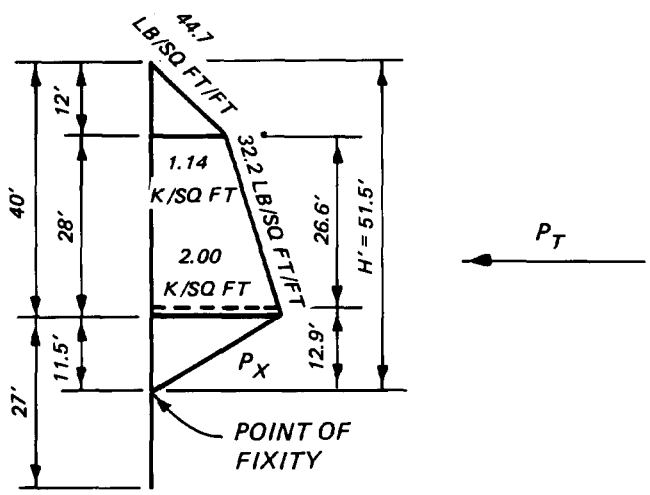

OUTBOARD SHEETING

Point of Fixity:

$p_x = p_p' - p' = 210.0 - 32.2 = 177.8$ psf/ft

$h = \frac{2.04}{0.1778} = 11.5'$

$H' = 11 + 28 + 11.5 = 51.5'$, $H'/4 = 12.9'$

$$P_s = 1/2(1.68)(40) = 33.6^{k/ft}$$

$$P_T = 1/2(1.14)(12) + 1/2(1.14 + 2.00)(26.6) + 1/2(2.00)(12.9) = 61.5^{k/ft}$$

$$Q = \frac{3M}{2B} = \frac{3\left[P_{w_1}\left(H_{w_1}/3\right) + P_a(H_s/3) - P_{w_2}\left(H_{w_2}/3\right)\right]}{2B}$$

$$= \frac{3[1/2(2.50)(40)(13.33) + 1/2(0.93)(40)(13.33) - 1/2(1.75)(28)(9.33)]}{2(43.99)}$$

$$= 23.4^{k/ft}$$

$$FS = \frac{P_s \tan\phi + fP_T}{Q} = \frac{33.6(0.577) + 0.30(61.5)}{32.4} = 1.62 > 1.50 \quad \text{ok}$$

HORIZONTAL SHEAR RESISTANCE

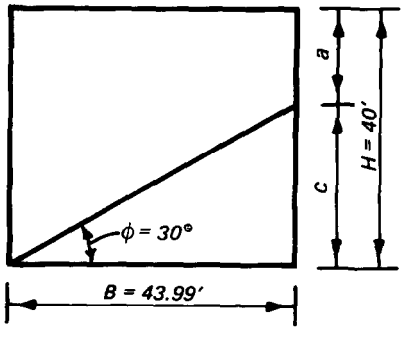

c = B TAN ϕ = 25.4'
a = H - c = 14.6'

$$M_r = \frac{\gamma' ac^2}{2} + \frac{\gamma' c^3}{3} = \frac{0.070(14.6)(25.4)^2}{2} + \frac{0.070(25.4)^3}{3} = 712^{ft-k}$$

$$M_f = P_T fB = 61.5(0.30)(43.99) = 812^{ft-k}$$

$$M_o = P_{w_1}\left(H_{w_1}/3\right) + P_a(H_s/3) = 50(13.33) + 18.6(13.33) = 914^{ft-k}$$

$$FS = \frac{M_r + M_f + P_{w_2}\left(H_{w_2}/3\right)}{M_o} = \frac{712 + 812 + 24.5(9.33)}{914} = 1.92 > 1.50 \quad \text{ok}$$

INTERLOCK TENSION

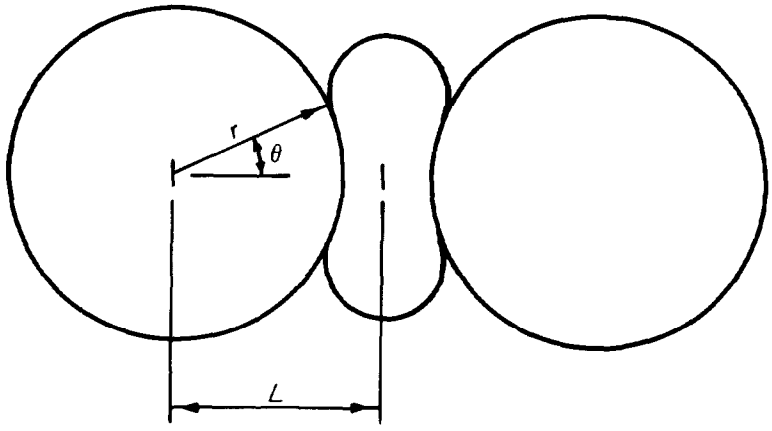

r = 26.26′
θ = 30°
L = 32.28′

$$t_{max} = pL$$

$$= \frac{2.00}{12}(32.28) = 5.38 \text{ k/Lin. in.}$$

$$FS = \frac{tg}{t_{max}} = \frac{16.0}{5.38} = 2.97 > 2.0 \qquad \text{ok}$$

PULLOUT RESISTANCE OF LAND FACE SHEETS

$$Q_u = 1/2\gamma KaD^2 \tan\delta(\text{perimeter})$$

$$= 1/2(0.070)(0.33)(27)^2(0.40)(2 \times 1) = 6.7^k$$

$$Q_p = \frac{P_{w_1}\left(H_{w_1}/3\right) + P_a(H_s/3) - P_{w_2}\left(H_{w_2}/3\right)}{3B(1 + B/4L)}$$

$$= \frac{50(13.33) + 18.6(13.33) - 24.5(9.33)}{3(43.99) \quad 1 + \frac{43.99}{4(32.28)}} = 3.9^k$$

$$FS = \frac{Q_u}{Q_p} = \frac{6.7}{3.9} = 1.72 > 1.50 \qquad \text{ok}$$

PENETRATION RESISTANCE OF OUTBOARD SHEETS

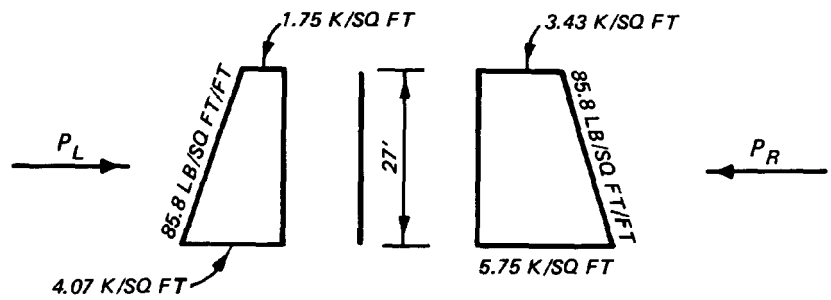

$$F_R = (P_L + P_R)\tan\delta = \left(\frac{1.75 + 4.07}{2} + \frac{3.43 + 5.75}{2}\right)(27)(0.40) = 81.0^{k/ft}$$

$$F_1 = P_T \tan\delta = 51.4(0.40) = 20.6^{k/ft}$$

$$FS = \frac{F_R}{F_1} = \frac{81.0}{20.6} = 3.93 > 1.50 \qquad \text{ok}$$

BEARING CAPACITY @ TOE

$$q_f = 1/2\gamma BN_\gamma + CN_c + \gamma D_f N_q = 1/2(0.070)(43.99)(20) + 0.070(27)(22)$$

$$= 72.4 \text{ ksf}$$

$$W = \gamma BH = 0.070(43.99)(40) = 123.2^k$$

$$M = P_{w_1}(H_1/3) + P_a(H_s/3) - P_{w_2}\left(H_{w_2}/3\right)$$

$$= 50(13.33) + 18.6(13.33) - 24.5(9.33) = 686^{ft-k}$$

$$FS = \frac{q_f}{\frac{W}{B} + \frac{6M}{B^2}} = \frac{72.4}{\frac{123.2}{43.99} + \frac{6(686)}{(43.99)^2}} = 24.6 > 2.0 \qquad \text{ok}$$

VERTICAL SHEAR RESISTANCE (Schroeder-Maitland)

PS28 sheet piling: $E = 29{,}000{,}000$ p/in.^{2} , $I = 2.8$ in.^{4}

$n_h = 160{,}000$ pcf (medium dense sand)

$\gamma' = 70$ pcf, $K = 10$

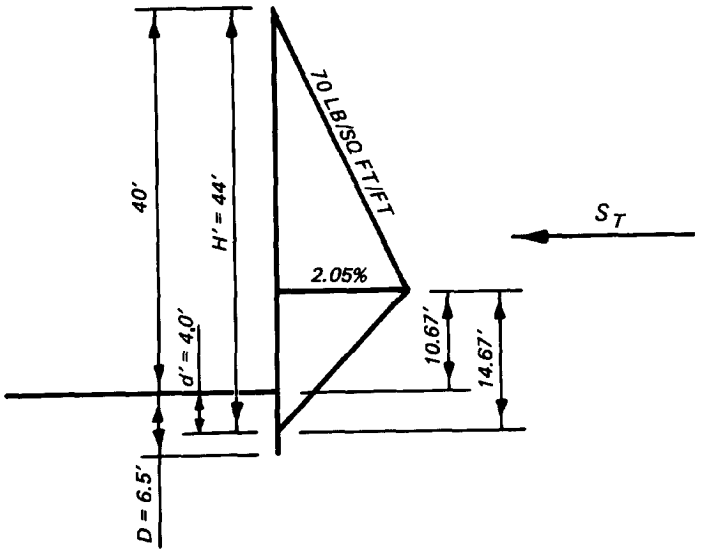

$$T = \sqrt[5]{\frac{EI}{n_h}} = \sqrt[5]{\frac{29{,}000{,}000(2.8)}{\frac{160{,}000}{1{,}728}}} = 15.44 \text{ in.} = 1.3 \text{ ft}$$

$d' = 3.1T = 3.1(1.3) = 4.0'$

$D = 5T = 5(1.3) = 6.5'$

$H' = 40 + 4.0 = 4.4'$

$S_T = 1/2\gamma' K(H')^2(\tan\phi + f) = 1/2(0.070)(1.0)(44)^2(0.577 + 0.30)$

$= 59.4^{k/l}$

$Q = 23.4^{k/l}$ - See Page 3

$$F.S. = \frac{S_T}{Q} = \frac{59.4}{23.4} = 2.54 > 1.5 \qquad \text{ok}$$

HANSEN'S METHOD

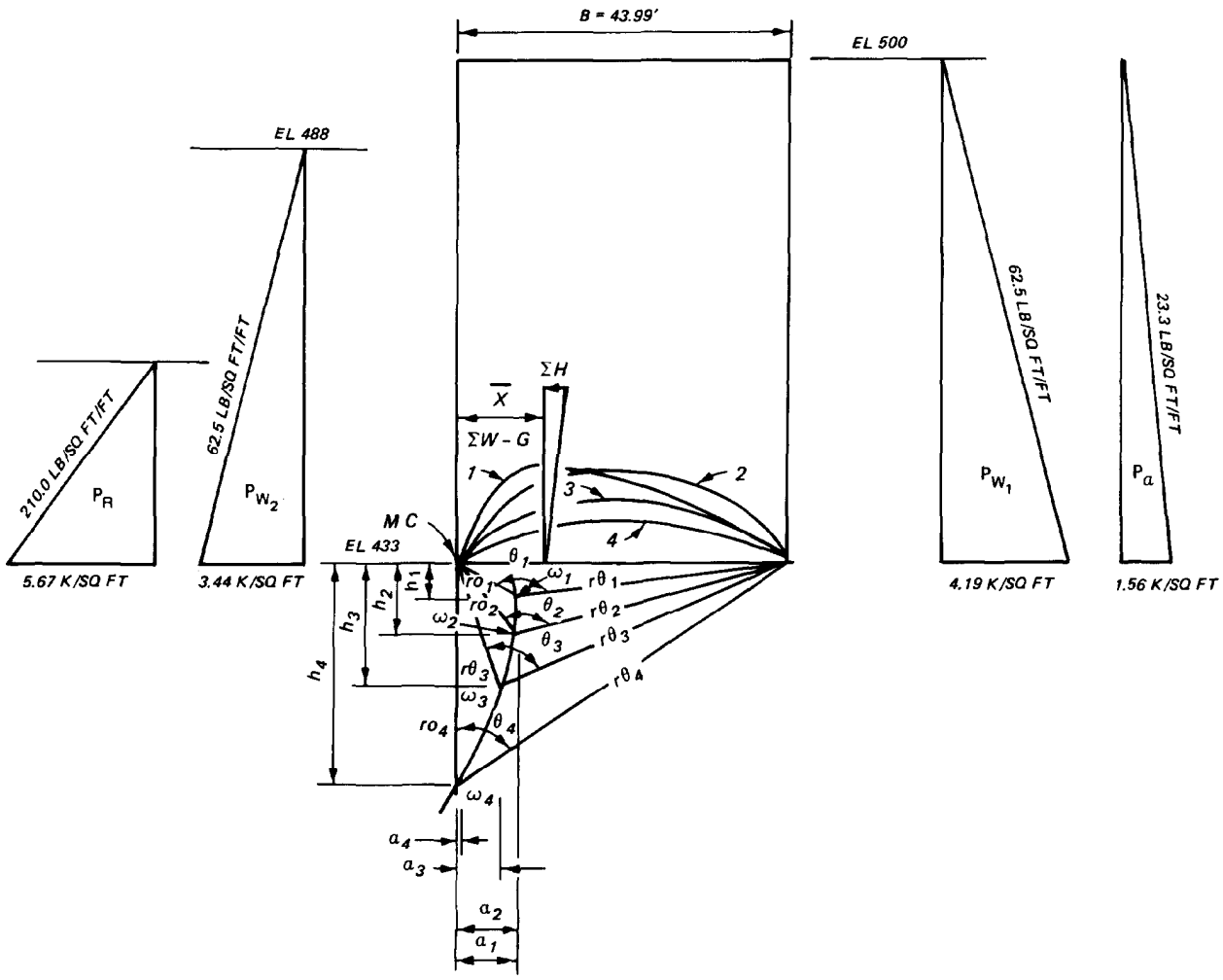

Try $\theta_2 = 2.0$ rad. , $\phi = 30°$ Neglect wall friction

$$\frac{r_{\theta_2}}{r_{o_2}} = e^{\theta_2 \tan \phi} = 3.15$$

$r_{\theta_2} = 39.5'$, $r_{o_2} = 12.5'$, $h_2 = 9.5'$, $a_2 = 8.0'$

$$G = \gamma A = \gamma' \left(\frac{r_\theta^2 - r_o^2}{4 \tan \phi} - \frac{Bh_2}{2} \right)$$

$$= 0.07 \left[\frac{(39.5)^2 - (12.5)^2}{4(0.577)} - \frac{43.99(9.5)}{2} \right] = 28^k$$

		W	H	Arm	+ M
W	43.99 × 67 × 0.070	206.3		22.00	4,539
G		-28.0		22.00 (1)	-616
P_{w_1}	1/2 × 4.19 × 67		← 138.7	22.67	-3,144
P_a	1/2 × 1.56 × 67		← 52.3	22.67	-1,186
P_{w_2}	1/2 × 3.44 × 55		→ 94.6	18.33	1,734
P_R	1/2 × 5.67 × 27		→ 76.5	9.00	689
		178.3	← 19.9^k		$2{,}016^{ft-k}$

$\bar{x} = 11.31'$

(1) Approximate.

$$M_R = 206.3(22 - 8.0) - 28(22 - 8.0) + 94.6(18.33 + 9.5)$$

$$+ 76.5(9.00 + 9.5) = 6{,}544^{ft-k}$$

$$M_o = 138.7(22.67 + 9.5) + 52.3(22.67 + 9.5) = 6{,}144^{ft-k}$$

$$FS = \frac{M_R}{M_o} = \frac{6{,}544}{6{,}144} = 1.07 < 1.5 \quad \text{cell diameter should be increased}$$

Summary

	θ	r_o *	r_θ *	h *	a *	G	$\bar{x}$	M_R	M_o	FS
1	2.5	9.0	35.5	4.5	8.0	29	11.12	5,675	5,194	1.09
2	2.0	12.5	39.5	9.5	8.0	28	11.31	6,544	6,144	1.06
3	1.5	18.0	42.5	16.0	6.0	20	11.71	8,141	7,386	1.10
4	1.0	29.5	52.5	29.5	1.0	12	12.19	11,550	9,964	1.16

* Scaled value.

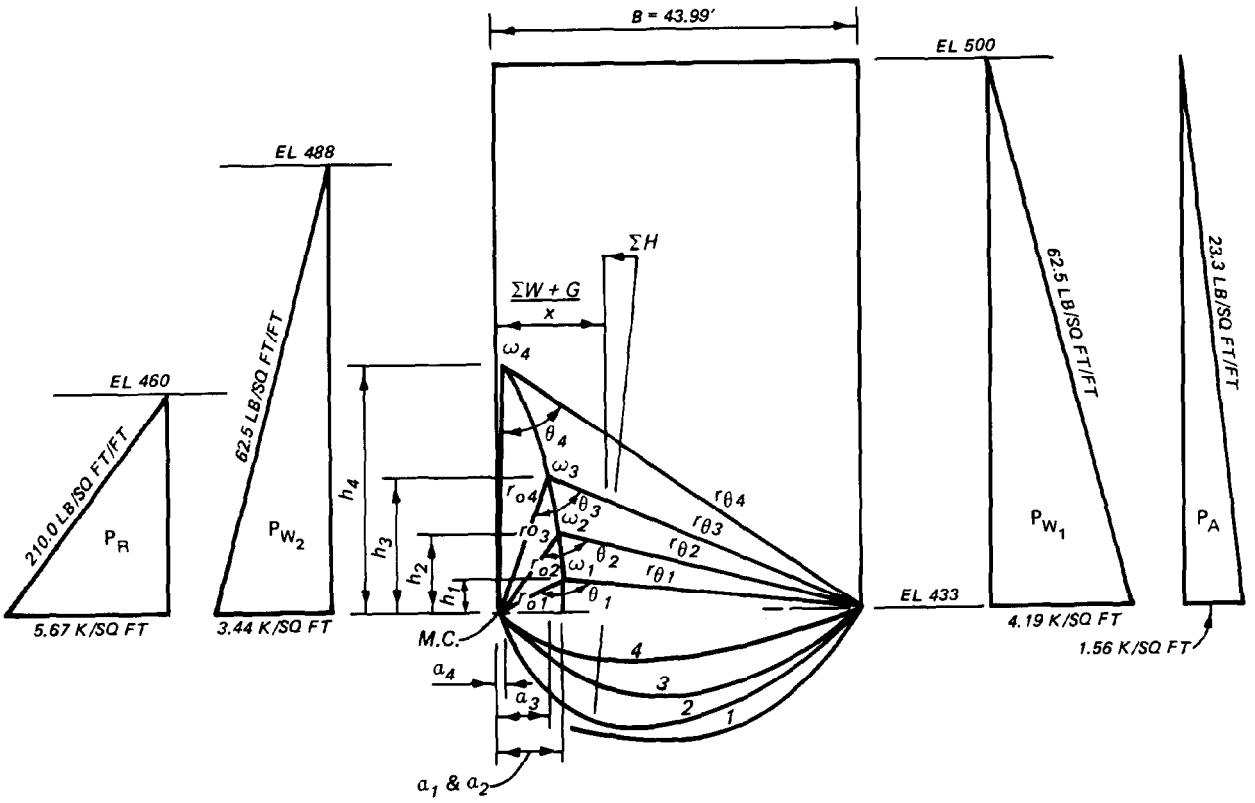

Try $\theta_3 = 1.5$ rad. , $\phi = 30°$ - neglect wall friction

$$\frac{r_{\theta_3}}{r_{o_3}} = e^{\theta_3 \tan \phi} = 2.36$$

$$r_{\theta_3} = 42.5' \ , \quad r_{o_3} = 18' \ , \quad h_3 = 16' \ , \quad a_3 = 6.0'$$

$$G = \gamma A = \gamma' \left(\frac{r_\theta^2 - r_o^2}{4 \tan \phi} - \frac{Bh_3}{2} \right)$$

$$= 0.07 \left[\frac{(42.5)^2 - (18)^2}{4(0.577)} - \frac{43.99(16)}{2} \right] = 20^k$$

		W	H	Arm	+ M
W	See Page 9	206.3			4,539
G		20.0		22.00(1)	440
P_{w_1}	See Page 9		← 138.7		-3,144
P_a	d_o		← 52.3		-1,186
P_{w_2}	d_o		→ 94.6		1,734
P_R	d_o		→ 76.5		689
		226.3^k	← 19.9^k		$3,072^{ft-k}$

$\bar{x} = 13.57'$

(1) Approximate.

$$M_R = 206.3(22 - 6.0) + 20(22 - 6.0) + 94.6(18.33 - 16) = 3{,}841^{ft-k}$$

$$M_o = 138.7(22.67 - 16) + 52.3(22.67 - 16) - 76.5(9.00 - 16) = 1{,}810^{ft-k}$$

$$FS = \frac{M_R}{M_o} = \frac{3{,}841}{1{,}810} = 2.12 > 1.5 \qquad \text{ok}$$

Summary

	θ	r_o *	r_θ *	h *	a *	G	$\bar{x}$	M_R	M_o	FS
1	2.5	9.0	35.5	4.5	8.0	29	13.90	4,946	3,470	1.42
2	2.0	12.5	39.5	9.5	8.0	28	13.86	4,115	2,553	1.61
3	1.5	18.0	42.5	16.0	6.0	20	13.57	3,841	1,810	2.12
4	1.0	29.5	52.5	29.5	1.0	12	13.27	5,889	2,625	2.24

* Scaled value.

Cellular Retaining Wall on Clay

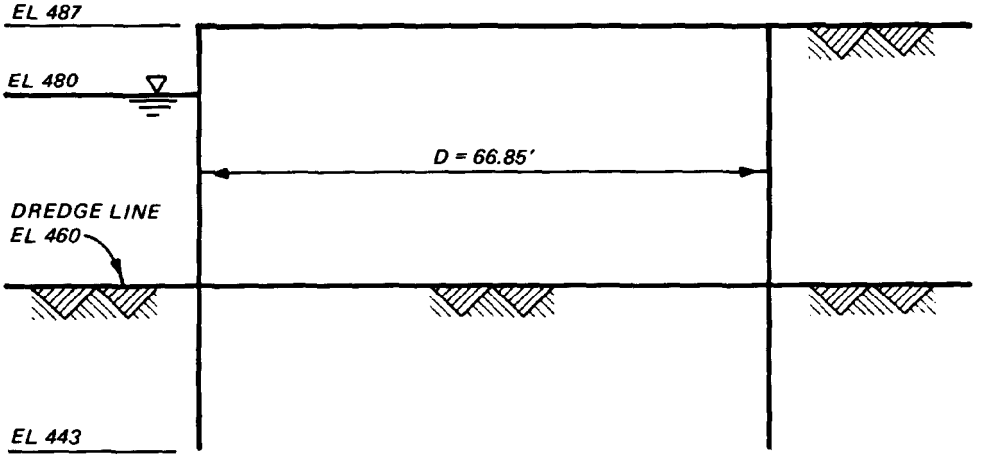

DESIGN DATA

Dia of cell, D = 66.85' ; effective width, B = 58.57'
Guaranteed piling interlock strength, tg = 16,000 PLI

Cell Fill and Backfill Properties (sand and gravel)

$\phi = 30°$, $\tan \phi = 0.577$

$\gamma = 110$ pcf (moist)

$\gamma' = 70$ pcf (saturated)

$$K_a = \frac{1 - \sin \phi}{1 + \sin \phi} = \frac{1 - 0.50}{1 + 0.50} = 0.33$$

$$p_a = \gamma K_a = 110(0.33) = 36.7 \text{ psf/ft}$$

$$p'_a = \gamma' K_a = 70(0.33) = 23.3 \text{ psf/ft}$$

Overburden Properties (medium stiff clay)

n_h = 150,000 pcf, C_a = 1,000 psf , γ = 120 pcf, γ' = 65 pcf

Coefficient of Friction:

Soil on steel, tan ϕ = 0.40

Steel on steel at interlocks, f = 0.30

LOADING

Service Condition - Cell fill and backfill both saturated to el 487. Pool at el 480.

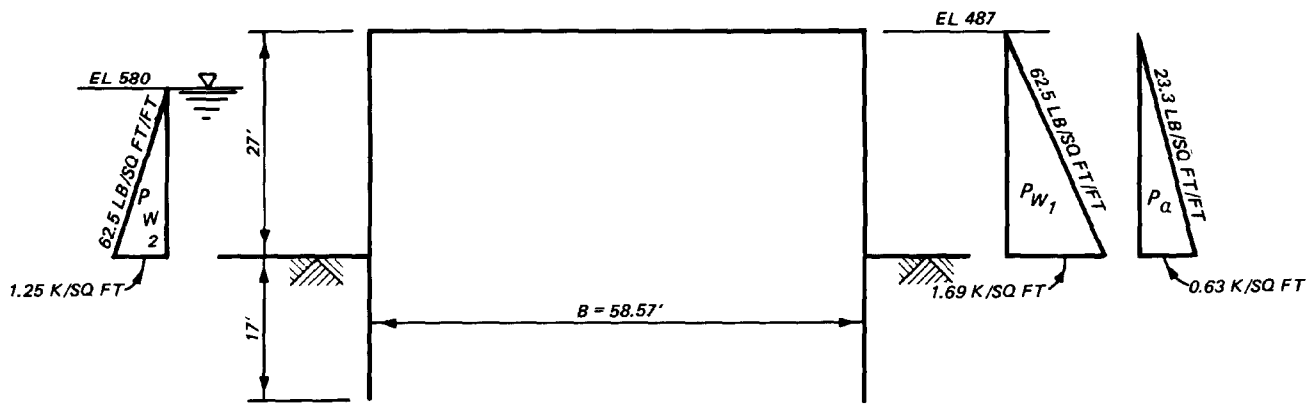

VERTICAL SHEAR RESISTANCE

$K_{\substack{\text{outboard}\\ \text{sheeting}}} = 1.6K_a = 1.6(0.33) = 0.53$

$p = \gamma' K + \gamma_w = 70(0.53) + 62.5 = 99.6$ psf/ft

$p' = \gamma' K = 70(0.53) = 37.1$ psf/ft

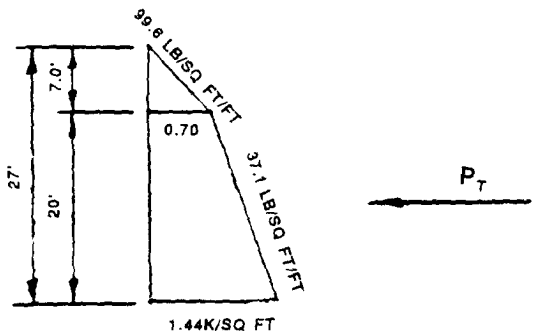

$\Delta P = P_T - P_p$

$$P_T = 1/2(0.70)(7.0) + \frac{0.70 + 1.44}{2}(20) = 23.9^{k/ft}$$

$$FS = \frac{\Delta PRf\left(\frac{B}{L}\right)\left(\frac{L + 0.25B}{L + 0.50B}\right)}{M}$$

$$= \frac{23.9(33.43)(0.3)\left(\frac{58.57}{36.04}\right)\left[\frac{36.04 + 0.25(58.57)}{36.04 + 0.50(58.57)}\right]}{\frac{1}{2}(1.69 + 0.63)\frac{(27)^2}{3} - \frac{1}{2}(1.25)\frac{(20)^2}{3}} = 1.52 > 1.50$$

HORIZONTAL SHEAR RESISTANCE

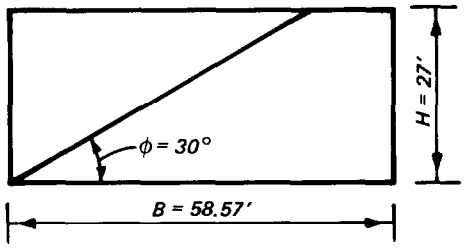

c = B TAN ϕ = 33.82' - USE 27
a = H - c = 0

$$M_r = \frac{\gamma' a c^2}{2} + \frac{\gamma' c^3}{3} = 0 + \frac{0.070(27)^3}{3} = 459^{ft-k}$$

$$M_f = P_T f B = 23.9(0.30)(58.57) = 420^{ft-k}$$

$$M_o = P_{w_1}\left(H_{w_1}/3\right) + P_a(H_s/3) = 22.8(9.0) + 8.5(9.0) = 282^{ft-k}$$

$$FS = \frac{M_r + M_f + P_{w_2}\left(H_{w_2}/3\right)}{M_o} = \frac{459 + 420 + 12(6.67)}{282} = 3.40 > 1.50 \qquad \text{ok}$$

INTERLOCK TENSION

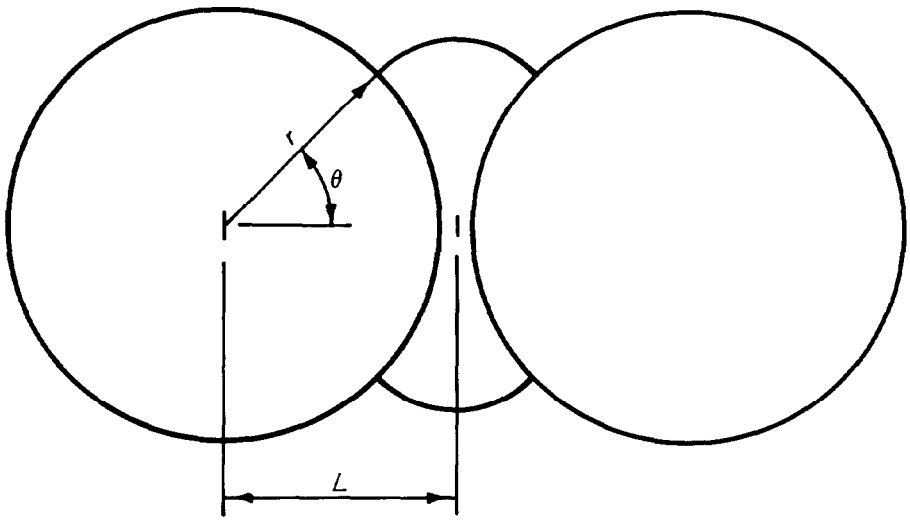

r = 33.43′
θ = 45°
L = 36.04′

$$t_{max} = pL$$

$$= \frac{1.44}{12}(36.04) = 4.32 \text{ k/Lin. in.}$$

$$FS = \frac{tg}{t_{max}} = \frac{16.0}{4.32} = 3.7 > 2.0 \quad \text{ok}$$

PULLOUT RESISTANCE OF LAND FACE SHEETS

$$Q_u = C_a D(\text{perimeter}) = 1.50(17)(2 \times 1) = 51^k$$

$$Q_p = \frac{M}{3B(1 + B/4L)} = \frac{282 - 12(6.67)}{3(58.57)\left[1 + \frac{58.57}{4(36.04)}\right]} = 0.8^k$$

$$FS = \frac{Q_u}{Q_p} = \frac{51}{0.8} = 64 > 1.5 \quad \text{ok}$$

BEARING CAPACITY

$$q_f = 1/2\gamma' BN_\gamma + cN_c + \gamma D_f N_q = 1.00(5.70) + 0.070(17)(1.0)$$

$$= 6.9 \text{ ksf}$$

$$W = \gamma' BH = 0.070(58.57)(27) = 110.7^k$$

$$M = 282 - 12(6.67) = 199^{ft-k}$$

$$FS = \frac{q_f}{\frac{W}{B} + \frac{6M}{B^2}} = \frac{6.9}{\frac{110.7}{58.57} + \frac{6(199)}{(58.57)^2}} = 3.1 > 3.0 \qquad ok$$

VERTICAL SHEAR RESISTANCE (Schroeder-Maitland)

PS28 sheet piling: $E = 29{,}000{,}000$ p/in.^{2} , $I = 2.8$ in.^{4}

$n_h = 150{,}000$ pcf (medium dense sand) - cell fill

$\gamma' = 70$ pcf , $K = 1.0$

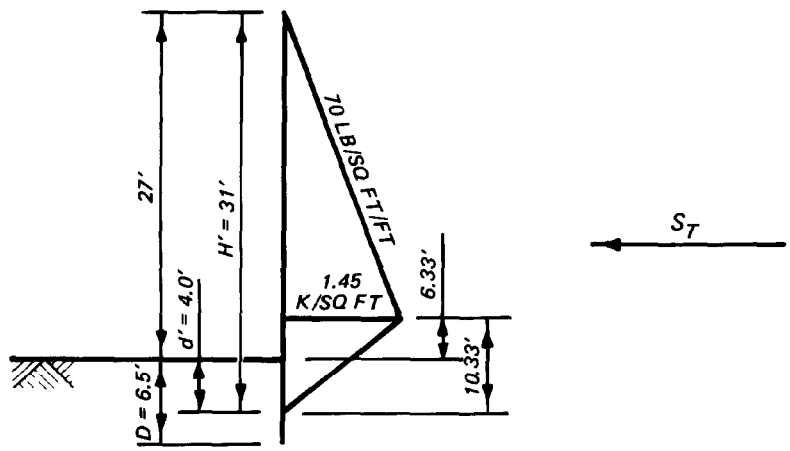

$$T = \sqrt[5]{\frac{EI}{n_h}} = \sqrt[5]{\frac{29{,}000{,}000(2.8)}{\frac{150{,}000}{1{,}728}}} = 15.64 \text{ in.} = 1.3 \text{ ft}$$

$$d' = 3.1T = 3.1(1.3) = 4.0'$$

$$D = 5T = 5(1.3) = 6.5'$$

$$H' = 27 + 4.0 = 31.0'$$

$$S_T = 1/2\gamma' K(H')^2(\tan\phi + f) = 1/2(0.070)(1.0)(31)^2(0.577 + 0.30)$$

$$= 19.4^{k/l}$$

$$Q = \frac{3M}{2B} = \frac{3(199)}{2(58.57)} = 5.1^{k/ft}$$

$$FS = \frac{S_T}{Q} = \frac{19.4}{5.1} = 3.80 > 1.50 \qquad \text{ok}$$

HANSEN'S METHOD

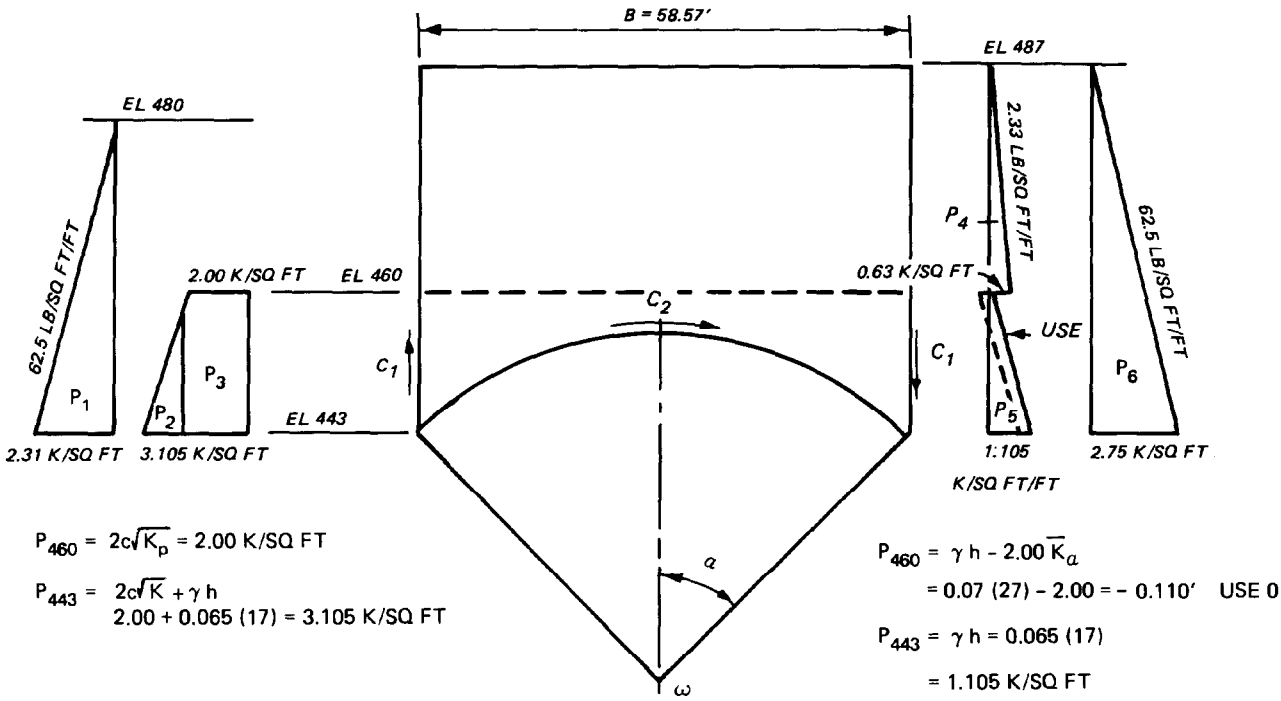

Try $\alpha = 45°$, $C = 1{,}000$ psf

		F	Arm	M_R	M_o
P_1	$1/2 \times 2.31 \times 37$	42.7	41.62	1,777	
P_2	$1/2 \times 1.105 \times 17$	9.4	34.96	329	
P_3	2.00×17	34.0	37.79	1,285	
P_4	$1/2 \times 0.63 \times 27$	8.5	55.29		470
P_5	$1/2 \times 1.105 \times 17$	9.4	34.96		329
P_6	$1/2 \times 2.75 \times 44$	60.5	43.96		2,660
C_1	$2 \times 1.00 \times 17$	34.0	29.29	996	
C_2	$1.00 \times \frac{29.29}{0.707} \times \frac{\pi}{2}$	65.1	41.43	2,697	
				7,084	3,459

$$FS = \frac{M_R}{M_o} = \frac{7{,}084}{3{,}459} = 2.05 > 1.5 \qquad \text{ok}$$

Summary

α	M_R	M_o	FS
45	7,084	3,459	2.05
60	3,920	2,488	1.58
70	2,985	1,992	1.50
75	2,645	1,777	1.49
80	2,352	1,567	1.50
85	2,095	1,362	1.54

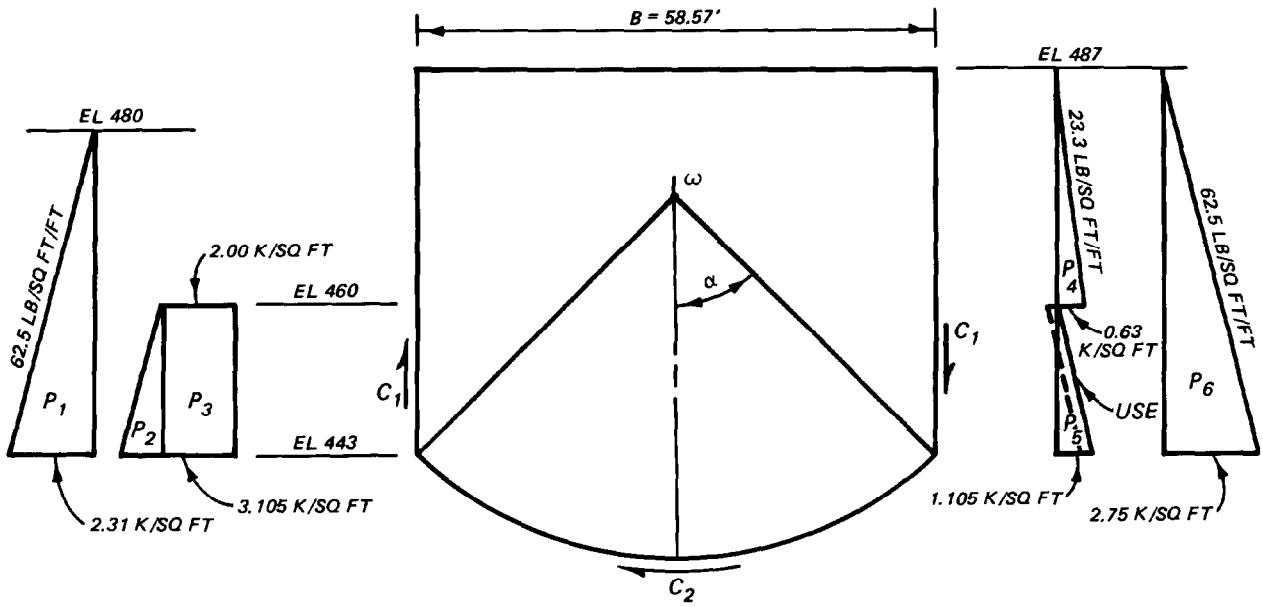

Try $\alpha = 45°$, C = 1,000 psf

		F	Arm	M_R	M_o
P_1	See Page 6	42.7	-16.96		724
P_2	d_o	9.4	-23.62		222
P_3	d_o	34.0	-20.79		707
P_4	d_o	8.5	-3.29	28	
P_5	d_o	9.4	-23.62	222	
P_6	d_o	60.5	-14.62	885	
C_1	d_o	34.0	29.29	996	
C_2	d_o	65.1	41.43	2,697	
				4,828	1,653

$$FS = \frac{M_R}{M_o} = \frac{4,828}{1,653} = 2.92 > 1.5 \qquad \text{ok}$$

Summary

α	M_R	M_o	FS
45	4,828	1,653	2.92
70	1,316	493	2.67
85	1,431	757	1.89