Procurement Procedures

Materials and Specifications

Sign Maintenance Procedures

Typography Reference

Reference Material

Reproduction Materials

1. Submittals

All contractors and products shall be approved in accordance with these specifications. Prior to the production of any work, the sign manufacturer shall submit a signed copy of fabrication shop drawings to the designated representative of the Corps of Engineers. These shall include finishes, graphic reproduction and hardware. All shop drawings signed "approved" shall supersede originating drawings. Manufacturers shall assume responsibility for errors in their drawings.

The following samples must be submitted which, once approved, shall become the standards against which the product shall be judged: joining detail, laminating detail, graphic application detail, hardware application, detail of each type of finish material and exact scaled pattern, showing typeface, letter-, word- and line-spacing, and placement of legend on sign panel.

2. Quality Assurance

The manufacturer, upon acceptance and approval of the submittal, assumes full responsibility for the construction, materials and workmanship of the work described in these specifications and drawings, and will be expected to comply with the spirit as well as the letter in which they were written.

The manufacturer shall replace or repair as directed by the designated representative of the Corps of Engineers all such damaged or defective materials which shall appear within a period of one (1) year from the date of final acceptance.

The manufacturer shall notify the designated representative of the Corps of Engineers of any discrepancies in, or omissions from drawings and specifications before commencing work and request clarification. A written addendum will be sent; the Corps of Engineers will not be responsible for oral instructions.

The manufacturer shall note that any cost caused by defective or ill-timed work, as a result of, but not limited to inferior workmanship or materials, improper scheduling or delinquent ordering shall be borne by the party responsible therefor.

3. Packaging

Each package shall include complete instructions to unpack, assemble and install the sign. Approved instructions shall be furnished by the manufacturer as well as a telephone number for information on sign assembly and installation.

Complete sign assemblies shall be shipped disassembled in two (2) units, unless otherwise specified by the Corps. One (1) unit shall contain sign panel(s), frame assembly(s), and assembly hardware, and one (1) unit shall contain sign post(s).

Where panels are ordered separately, individual or groups of sign panels shall be shipped with all necessary hardware (in case of aluminum panels with frames) in one unit. Packaging shall be adequate to provide maximum protection from damage during storage and shipping. Panel shall be protected on both sides with a face sheet, and post to be completely wrapped in cardboard and bound. Cautionary labels for correct shipping and handling shall be placed on each package.

All deliveries and shipping schedules shall be coordinated with the designated representative of the Corps of Engineers

4. Materials

All sign fabrication shall comply to the standards as described in the Graphic Standards Manual. No modification of any kind shall be permitted without the express written confirmation by the Corps. All materials shall be new and of first quality. Factory seconds shall not be accepted.

Shop tolerances shall not exceed ±.0625″, field tolerances shall not exceed ±.125″.

Where the terms "approved equal", "other approved", "equal to", "acceptable", or other general qualifying terms are used, it shall be understood that reference is made to the ruling and judgement of the designated representative of the Corps of Engineers.

A list of approved and qualified products and materials is included in the back of this Section or can be obtained from the Corps of Engineers. No use of material other than those specified in this manual or "approved equal" shall be permitted.

5. Graphics

All typesetting shall comply to standards for the use of Helvetica Regular, Helvetica Medium, and Helvetica Bold, as described in Appendix D of this manual.

Color, typographic and Corps identification graphics shall conform to the standards as outlined in Section 4 and as shown on the layout drawing for each specific sign panel. No modification shall be permitted. Horizontal and vertical alignment of legends shall not deviate ±.0625". Camera-ready full-size artwork of the Corps signature shall be provided by the Corps of Engineers (see page 4.4-9). No modifications shall be permitted.

All artwork shall be reproduced using first generation images, as provided in this manual. Reproduction shall be performed using a distortion-free photomechanical process or a digitizing system with a pointing accuracy of 1/100" (1/25mm) or better. Plotter systems shall have a resolution and positioning accuracy of 1/50mm or better.

All retro-reflective graphics shall be produced in complete one-piece make up, not in individual sections. Lettering up to 45" high shall be produced prespaced in one piece. Larger lettering and graphics must be prepared prespaced in exact registration to abutting sections.

6. Engineering Criteria

The following criteria have been used as the standards governing material specification, assembly and footings for all recreation project signs, unless otherwise specified.

Wind Pressure	35 PSF
Soil	2-KSF-Minimum
Frost Depth	48" Maximum

If these criteria are not adequate for a specific sign location, necessary modification shall be made to conform to the basic assembly specifications of specified sign type. Modifications may include, but are not limited to thicker panels, larger dimension sign posts or larger footing configuration.

The design of the structural requirements of special one-of-a-kind signs shall conform to the basic assembly specifications for similar sign types. The modified assembly shall fulfill the requirements of local criteria for wind pressure, soil and frost depth.

Assembly configurations and material specifications are referenced under "specification code" with sign descriptions in Sections 5-18. Detailed material, assembly, and mounting specifications are provided on the next pages.

The following materials shall be used for the construction of signs unless special panels and/or modifications require more stringent standards of performance:

Sign posts for routed redwood signs shall use construction heart redwood per grading rules of the California Redwood Association, or better.

Posts for signs with the HDO or ALU specification codes may use construction heart redwood per grading rules of the California Redwood Association or better, treated Douglas fir No.1 or better, or treated southern yellow pine No.1 or better, unless otherwise specified.

Do not use treated posts on signs with routed redwood panels.

Material shall be well seasoned and free of any defects. All post sizes may be no more than 0.5" less than nominal dimensions, and will be sanded smooth prior to finishing.

Break-away or frangible post
A large dimension wooden post on approach roadways or project roadways may require break-away or frangible posts. These are used only for signs placed within the highway right-of-way. Break-away capacity is created by drilling holes parallel to the face of the sign near the base of the upright. The number, size, and location of holes will be determined based upon size of upright, type of wood, size and height of sign panel, and location of the sign. Because of the wide variation in structural capacity of different types of wood, standard specifications are not provided. Local engineering requirements vary greatly from one jurisdiction to another. It is recommended that state or local highway engineering design criteria prevail when placing a sign requiring this feature.

Sign panels shall use HDO plywood, (0.75" thick unless otherwise instructed), or redwood (clear heart, 2" thick). Alternate material includes sheet aluminum (0.080-0.125"), with appropriate reinforcements as specified on page B.2c.

Footing shall consist of concrete 2500 PSI (28 days). Dimensions shall be as indicated on page B.2b.

6. Engineering Criteria (cont'd)

The recommended footing size and depth for all signs except directional signs (see page B.2c) as specified in the two right columns of the diagram below, will depend upon the criteria listed in the six columns on the left. The decision to provide concrete footings for signs should be based upon site conditions and post size.

Use the diagram to select the appropriate footing configuration. Any conditions that go beyond the criteria shown shall be engineered on a site-by-site basis.

Footing Diagram

Post Size	Frost Depth	Post Number	HAGL	Panel Size (sq. ft.)	Panel Height	Footing Cross Section	Footing Depth
4" x 4", 4" x 6", 6" x 6"	0" - 30"	1	42"	≤9	≤4' - 6"	1' - 6"	2' - 6"
					>4' - 6"	1' - 6"	4' - 0"
				>9	na	1' - 6"	4' - 0"
			60"	≤7	≤3' - 6"	1' - 6"	2' - 6"
					>3' - 6"	1' - 6"	4' - 0"
				>7	na	1' - 6"	4' - 0"
		2	42"	≤20	≤5' - 0"	1' - 6"	2' - 6"
					>5' - 0"	1' - 6"	4' - 0"
				>20	na	1' - 6"	4' - 0"
			60"	≤16	≤4' - 0"	1' - 6"	2' - 6"
					>4' - 0"	1' - 6"	4' - 0"
				>16	na	1' - 6"	4' - 0"
4" x 4", 4" x 6", 6" x 6"	30" - 36"	1	42"	≤10	≤5' - 0"	1' - 6"	3' - 0"
					>5' - 0"	1' - 6"	4' - 0"
				>10	na	1' - 6"	4' - 0"
			60"	≤9	≤4' - 6"	1' - 6"	3' - 0"
					>4' - 6"	1' - 6"	4' - 0"
				>9	na	1' - 6"	4' - 0"
		2	42"	≤24	≤6' - 0"	1' - 6"	3' - 0"
					>6' - 0"	1' - 6"	4' - 0"
				>24	na	1' - 6"	4' - 0"
			60"	≤20	≤5' - 0"	1' - 6"	3' - 0"
					>5' - 0"	1' - 6"	4' - 0"
				>20	na	1' - 6"	4' - 0"
4" x 4", 4" x 6", 6" x 6"	36" - 48"	1,2	na	na	na	1' - 6"	4' - 0"
6" x 8", 9" x 9"	0" - 48"	1,2,3	na	na	na	2' - 0"	4' - 0"

6. Engineering Criteria (Cont'd)

The tables below identify the specific design requirements to fabricate all configurations and sizes of approach roadway and project directional signs. The tables are applicable for both HDO-4 (B.4-4) and ALU-4 (B.5-4) specifications.

The first three columns identify the size of the panel and the following columns list the correct size and number of parts required to construct the sign.

Approach Roadway Directional sign construction diagram

Capital Letter Height	Maximum Panel Length	Panel Size (sq. in.)	Post Size	Post Number	"Z" Bar	Footing Cross Section	Footing Depth
4"	60"	0 - 2500	4"x 6"	2	0	1'- 6"	4'- 0"
	80"	0-1400	4"x 4"	2	2	1'- 6"	4'- 0"
		1400 - 3000	4"x 6"	2	2	1'- 6"	4'- 0"
		3000 - 3400	4"x 8"	2	2	2'- 0"	4'- 0"
	96"	0 - 2700	4"x 6"	2	2	1'- 6"	4'- 0"
		2700 - 4200	4"x 8"	2	2	2'- 0"	4'- 0"
	104"	0 - 2900	4"x 6"	2	2	1'- 6"	4'- 0"
		2900 - 4500	4"x 8"	2	2	2'- 0"	4'- 0"
6"	84"	0 - 3200	6"x 6"	2	2	1'- 6"	4'- 0"
		3200 - 4200	6"x 6"	2	2	1'- 6"	4'- 0"
		4200 - 5200	6"x 8"	2	2	2'- 0"	4'- 0"
	102"	0 - 2700	6"x 6"	2	2	1'- 6"	4'- 0"
		2700 - 3700	6"x 6"	2	3	1'- 6"	4'- 0"
		3700 - 6700*	6"x 8"	2	3	2'- 0"	4'- 0"
	120"	0 - 4500	6"x 6"	3	0	1'- 6"	4'- 0"
		4500 - 5800	6"x 6"	3	0	2'- 0"	4'- 0"
		5800 - 7800*	6"x 8"	3	0	2'- 0"	4'- 0"
	138"	0 - 5000	6"x 6"	3	0	1'- 6"	4'- 0"
		5000 - 9000*	6"x 8"	3	0	2'- 0"	4'- 0"
	156"	0 - 6400	6"x 6"	3	2	2'- 0"	4'- 0"
		6400 - 7800	6"x 8"	3	2	2'- 0"	4'- 0"
		7800 - 10,200*	6"x 8"	3	3	2'- 0"	4'- 0"
9"	96"	0 - 5600	6"x 8"	2	2	2'- 0"	4'- 0"
		5600 - 8600	6"x 8"	3	3	2'- 0"	4'- 0"
	120"	0 - 7000	6"x 8"	3	2	2'- 0"	4'- 0"
		7000 - 10700	6"x 8"	3	3	2'- 0"	4'- 0"
	138"	0 - 8000	6"x 8"	3	2	2'- 0"	4'- 0"
		8000 - 12300	6"x 8"	3	3	2'- 0"	4'- 0"
	156"	0 - 9100	6"x 8"	3	2	2'- 0"	4'- 0"
		9100 - 13900	6"x 8"	4	3	2'- 6"	4'- 0"

*Panel may require horizontal or vertical splice in HDO or ALU

Project Directional sign construction diagram

Capital Letter Height	Maximum Panel Length	Panel Size (sq. in.)	Post Size	Post Number	"Z" Bar	Footing Cross Section	Footing Depth
2"	54"	0 - 1100	4"x 4"	2	0	1'- 6"	4'- 0"
3"	60"	0 - 1800	4"x 6"	2	0	1'- 6"	4'- 0"
	78"	0 - 2400	4"x 6"	2	2	1'- 6"	4'- 0"
4"	60"	0 - 2400	4"x 6"	2	0	1'- 6"	4'- 0"
	86"	0 - 3800	4"x 6"	2	2	1'- 6"	4'- 0"
6"	72"	0 - 3500	6"x 6"	2	2	1'- 6"	4'- 0"
		3500 - 4800	6"x 8"	2	2	2'- 0"	4'- 0"
	96"	0 - 4700	6"x 6"	2	2	2'- 0"	4'- 0"
		4700 - 6400*	6"x 8"	2	2	2'- 0"	4'- 0"
	120"	0 - 5800*	6"x 6"	3	0	2'- 0"	4'- 0"
		5800 - 7800*	6"x 8"	3	0	2'- 0"	4'- 0"

*Panel may require horizontal or vertical splice in HDO or ALU

0. Introduction

0.1 Intent

0.1.1 The following pages in this document (B.2d-i) identify the general contract performance requirements for sign fabricators, sign installers, and material suppliers. It is provided as a guideline for attachment to, or to be made part of all requests to Contractors for signs, in compliance with the *U.S. Army Corps of Engineers Sign Standards Manual.*

0.1.2 The function is to provide a common standard by which to select contractors and evaluate work in-progress and work supplied to Corps projects.

0.1.3 This document has been reviewed by the Office of Contracting Policy for use when contracting for signs, sign installation and sign maintenance services in compliance with the *U. S. Army Corps of Engineers Sign Standards Manual.*

0.2 Contents

1. Technical Provisions
1.1 Authority B.2e
1.2 Definitions B.2e
1.3 Submissions B.2e
1.4 Quality Assurance B.2e
1.5 Delivery and Storage B.2f
1.6 Installation (Optional) B.2f

2. Sign Specifications
2.1 General B.2g
2.2 Materials B.2g
2.3 Graphic Capabilities B.2g

3. National Sign Supply Agreements
3.1 Description B.2h

4. Contractor Qualifications
4.1 Requirements B.2h

5. Government Provisions
5.1 Additions and Modifications B.2i
5.2 Ordering and Receiving B.2i

6. Contract Instructions
6.1 General B.2i

1. Technical Provisions

1.1 Authority

1.1.1 In the event of any conflict between these provisions and the attached document entitled *Sign Standards Manual, EP 310-1-6a & 6b*, the requirements of the latter document shall take precedence and apply.

1.2 Definitions

1.2.1 For the purpose of this document the following definitions shall apply.

1.2.2 *Contractor* shall mean the individual, firm or corporation executing the contract and performing the work under the terms of the contract documents.

1.2.3 *Contract documents* shall mean all drawings, specifications and other items comprising the contract.

1.2.4 *The Corps* shall mean the designated representative of the U.S. Army Corps of Engineers.

1.2.5 *Standards, Sign Standards* and *Sign Program Standards* shall mean all sign format designs, typography standards, material and fabrication specifications, and related planning and management guidelines as contained in the *Corps of Engineers Sign Standards Manual (EP 310-1-6a and 6b)*, all Sign Program Management Advisories, and associated documents including ER 1130-2-431.

1.2.6 Where *Approved Equal, Other Approved, Equal To, Acceptable,* or other general qualifying terms are used, it shall be understood that reference is made to the ruling and judgement of the designated representative of the Corps of Engineers.

1.3 Submissions

1.3.1 Shop Drawings: Prior to the production of any work, the Contractor shall submit a signed copy of shop drawings to the Corps. These drawings shall include: details of construction and hardware, finishes, and graphic reproduction drawings of sign face (graphic format, legend, typography, and symbols). All shop drawings signed "approved" shall supersede originating drawings. The Contractor shall assume responsibility for errors in their drawings.

1.3.2 The Contractor shall notify the Corps of Engineers of any discrepancies in, or omissions from drawings and specifications that are part of these contract documents before commencing work and request clarification. The Corps will provide a written addendum and will not be responsible for oral instructions.

1.3.3 Samples: Submit following samples which, once approved, shall become the standard against which the product shall be judged: joining detail, laminating detail, graphic application detail, hardware application, detail of each type of finish material and an exact full-size pattern, showing typeface, letter-, word-, and line-spacing, and placement of legend on sign panel for each of the specific type(s) of sign(s) (for example: STANID, APRDIR, Recreation Grids 1-3, RS, etc.) to be produced.

1.3.4 Graphics: Prior to production, the Contractor shall submit exact (full or half-scale) fine-line pen plotting, or weeded rubylith film patterns of all standard signs faces to be produced as shown in the Sign Standards Manual. These submissions shall include all typography, symbols, rules, border (crop marks) and other graphic elements that are part of the sign face. These patterns will become the standard by which all fabricated signs are judged.

1.4 Quality Assurance

1.4.1 The Contractor upon acceptance and approval of the submittals shall assume full responsibility for the construction, materials and workmanship of the work described in these notes and drawings, and will be expected to provide signs that meet or exceed those standards.

1.4.2 The Corps reserves the right to inspect the Contractor's manufacturing and storage facilities, sign materials, supplies and products at any time the Contractor is manufacturing sign products for the Corps.

1.4.3 The Corps reserves the right to disassemble any finished product and to subject it to any test necessary to determine its strength or integrity. In the event of product failure, the Contractor shall be required to rectify all deficiencies noted by the Corps. If any product is damaged by the test result but meets the standards, the Contractor shall be reimbursed for replacement.

1.4 Quality Assurance Continued

1.4.4 The Contractor shall replace at his/her own expense all signs or sign parts that are damaged or defective, before final acceptance.

1.4.5 The Contractor shall replace or repair as directed by the Corps all damaged or defective materials, or signs which fail to meet specifications at the point of delivery, upon completion of installation, or within a period of one (1) year exposure to the natural elements from the date of final acceptance.

1.4.6 The Contractor is advised that any cost caused by defective or ill-timed work, as a result of, but not limited to inferior workmanship, materials, improper scheduling, or delinquent shipment shall be born by the Contractor.

1.5 Delivery, Storage

1.5.1 All signs shall be completed and delivered within six (6) weeks of date of authorization to proceed along with receipt of the Purchase Order or Contract, unless otherwise specified.

1.5.2 The Contractor shall submit an itemized written confirmation of each order within three (3) working days with a delivery and/or installation schedule, less any item in question. The Contractor shall attach in writing any questions concerning the order and return these with the confirmation. The Corps will submit in writing, a clarification for any item in question. Upon receipt, the Contractor will confirm these additional items as noted above.

1.5.3 Orders of special, non-catalog signs shall be confirmed by the Contractor with a half-scale or full-scale plotted drawing or weeded rubylith film of the custom sign-face, showing legend in specified typeface, with letter-, word-, and line-spacing as it will appear on the actual sign. Plotted drawings shall be approved by the Sign Coordinator.

1.5.4 The Contractor shall store, ship and handle all signs so as to protect them from any kind of damage.

1.5.5 Each package shall be clearly labeled and include complete instructions on how to unpack, assemble and install the sign.

1.5.6 Each shipping container shall be closed and sealed on all sides. Signs and sign parts must be properly packed and braced to prevent them from shifting or abrading or otherwise being damaged while in transit. Any container weighing over sixty (60) pounds must have a raised base to allow lift truck forks to be placed under the package without causing damage to the container.

1.5.7 Complete sign assemblies shall be shipped disassembled in two (2) units, unless otherwise specified by the Corps. One (1) unit shall contain sign panel(s), frame assembly(s), and assembly hardware, and one (1) unit shall contain sign post(s).

1.5.8 Separately ordered sign panels shall be shipped with all necessary attachment hardware in one unit.

1.6 Installation (Optional)

1.6.1 When installation is included in the project sign order, installation charges relating to a specific project may be necessary to meet a minimum dollar requirement. This amount will vary depending on the location of the Contractor. In the event the minimum charge cannot be met, the Contractor shall ship the item(s) ordered and an approved local sign Contractor shall be contracted to provide requested installation services.

1.6.2 With installation the Contractor is to furnish at his own cost all labor, materials, tools, equipment, loading/unloading and transportation services required to perform and complete the work according to the specifications and contract documents. All work shall be done in accordance with the highest standards of the industry.

1.6.3 The Contractor shall follow all regulations and instructions for installation as provided in the Contract Documents or by the Sign Standards Manual, and shall notify the Corps if such installation will not provide permanent, rigid installation within existing site conditions.

1.6.4 The Contractor shall contact the Corps Project Manager at least fourteen (14) days prior to delivery/installation to be instructed when and how delivery and/or installation are to be made. The Corps cannot delay or detain contractors unnecessarily or prevent them from meeting the schedule without providing written notification, at least fourteen (14) days prior to delivery and/or installation.

1.6.5 Designated temporary or permanent signage at the location of any new sign shall be removed completely by the Contractor prior to installation of the new signs unless otherwise specified.

Continued

1.6.6 All existing signage and related structures shall be removed from the project and disposed of properly in accordance with state and local regulations unless otherwise indicated.

1.6.7 The Corps shall be responsible for identifying the exact placement location of each sign panel. The Contractor shall not be responsible for any damage to underground utilities due to digging in the specified location.

1.6.8 The Contractor shall check and verify all dimensions and conditions at the job site prior to installation.

1.6.9 The Contractor shall install all signs level and plumb at the specified heights and alignments.

1.6.10 The Contractor shall protect all adjacent structures, surfaces, vegetation and plant materials from damage during installation. Any damage to the items described above must be restored to original condition and appearance, or replaced within thirty (30) days. The Contractor shall provide all necessary protection for his work until turned over to the Corps.

1.6.11 The Contractor shall remove all packing, sign boxes, and construction materials from the project upon completion of installation.

1.6.12 The Contractor shall submit two (2) copies of the invoice, showing the order or contract number, and certifying that installation is complete and correct.

2. Sign Specification

2.1 General

2.1.1 All sign fabrication shall comply to the standards as described in the Sign Standards Manual. No modification of any kind shall be permitted without the express written confirmation of the Corps.

2.2 Materials

2.2.1 All materials shall be new and of first quality. Materials shall meet or exceed the standards and specifications. Factory seconds shall not be accepted.

2.2.2 Shop tolerances shall not exceed ±0.0625" (1/16"). Tolerances include, but are not limited to, overall dimensions, alignment of mounting hardware and adherence to graphic formats. Field tolerances shall not exceed ±0.125" (1/8"). Tolerances include but are not limited to, leveling and alignment of mounting, height above grade level (HAGL) and interfit of sections of large signs with frames.

2.2.3 All materials shall comply with the items provided in the Sign Materials and Manufacturers List (Appendix E), or approved equal. These products and materials have demonstrated capability to comply with standards and specifications as specified in the Sign Standards Manual.

2.2.4 To determine what is an equal or better product when a material is specified by name with note "or approved equal", the burden is on the manufacturer to provide proof to the District Sign Program Manager that the alternate product can and does meet or exceed Corps standards by comparisons using all available performance criteria, product warranties, convenience of maintenance, and overall appearance. "Equal or better" is not based on the cost of the material, but rather on product specifications.

2.3 Graphic Capabilities

2.3.1 All typesetting shall comply with standards for the use of Haas Helvetica Regular, Helvetica Medium, and Helvetica Bold, as described in Appendix D of the Sign Standards Manual. No modifications shall be permitted.

2.3.2 All computer-generated graphics shall comply with the specifications as described in Appendix B and D, including the Type Generation Standards, of the Sign Standards Manual. No modification shall be permitted without the express written approval of the Corps.

2.3.3 Computer-generated symbols digitized from artwork provided in the Sign Standards Manual must match one-to-one the original artwork when placed on samples cut from rubylith film. Digitized symbols should be kept on file by the Contractor for reproduction in any size required.

2.3.4 Formats and graphics for non-catalog, custom made signs shall be kept on file for a period of one year by the Contractor for future reproduction without any additional make-up cost.

The following conditions of this contract performance specification are applicable to all national supply contracts and agreements.

3. National Sign Supply Agreements

3.1 Description

3.1.0 The following contract services and performance requirements apply to all suppliers who are providing signs to the Corps under a National Sign Supply Agreement. This includes designated contractors under a National Requirements Contract, UNICOR: Federal Prison Industries, and contractors on the General Service Administration contract schedule who have a demonstrated capability to comply with applicable Corps Sign Standards and/or specific sign products.

4. Contractor Qualifications

4.1 Requirements

4.1.1 No subcontracting for sign manufacturing shall be allowed, in part or in whole, unless otherwise agreed upon by both parties in writing. The Contractor shall have all resources to produce the signs in-house.

4.1.2 On a quarterly basis beginning with January 1, the Contractor shall provide the National Sign Program Manager a computer print-out of all signs ordered. The listing, alphabetically ordered by District, and Project, and shall include, but is not limited to; sign type code, specification code, legend size (A), quantity, date of purchase and exact description of all non-catalog signs.

4.1.3 The Contractor shall provide a price list for all standard catalog Corps sign products. Requests for quotations for non-catalog signs shall be submitted to the Contractor in writing by the ordering Corps office. The Contractor will submit a written quotation for work unless the price can be determined directly off a approved price schedule.

4.1.4 All finished sign panels shall be provided with a weather resistant identification placed on the back of the sign indicating sign plan ID number, manufacturer, and date of fabrication. Format of identification to be specified by the National Sign Program Manager.

4.1.5 The Contractor shall inform the Corps National Sign Program Manager of any order that does not comply with the Sign Standards Manual prior to fabrication.

4.1.6 The Contractor shall have the following methods of communication; incoming WATS line; telefax; and electronic mail (as supplied by tie-in with Corps network).

4.1.7 The Contractor shall furnish a toll-free telephone number, staffed during normal business hours for information on sign assembly, installation and ordering.

4.1.8 Prior to the awarding of the contract, the Corps may inspect the facilities of the Contractor to verify capability to perform contract requirements.

4.1.9 The Contractor shall have sufficient financial stability to carry both the anticipated level of raw materials and product inventory, while simultaneously carrying outstanding receivables.

4.1.10 The Contractor must maintain and support a formal quality assurance program, to be evidenced by the employment of a full-time Quality Assurance Manager and supporting written documentation.

4.1.11 All deliveries and shipping schedules shall be coordinated with the designated representatives of the Corps of Engineers. All schedules for the above listed contracted suppliers shall be maintained within a 5% error margin (3% of total production/delivery time) during any six (6) month period.

4.1.12 Any failure of the Contractor to live up to the regulations and requirements as described in these contract documents and items included in the General Contract Provisions shall be just cause for the Corps to terminate this agreement.

All items listed below shall conform to material specifications as described on page B.3 through B.3a for routed redwood signs, unless otherwise instructed on this page.

1 Panel, 2" thick redwood with 2" x 1.25" routed endstrip to create a 0.5" reveal, see detail 3, page B.7-2. Width dimension of sign face is measured from the inside reveal on each endstrip.

2 Solid or glue laminated redwood post, 4" x 4", 4" x 6", 6" x 6". The dimension parallel to the sign face shall be equal to the Capital Letter Height (A). Post size shown here reflects the HAGL and does not include the section under ground. For footing see page B.2a-b.

3 Panel attachment hardware shall be 0.3125" socket head cap screws and 0.5" washers, countersunk at least 0.25" from the surface of the sign post. For attachment see detail 3, page B.7-2.

NOTE: Double-faced signs shall be installed identical to single-faced signs, with a second sign panel mounted flush to the backside of the sign post. For attachment see detail 4, page B.7-2.

NOTE: Signs with panel heights less than 27" shall require only 2 bolts per side.

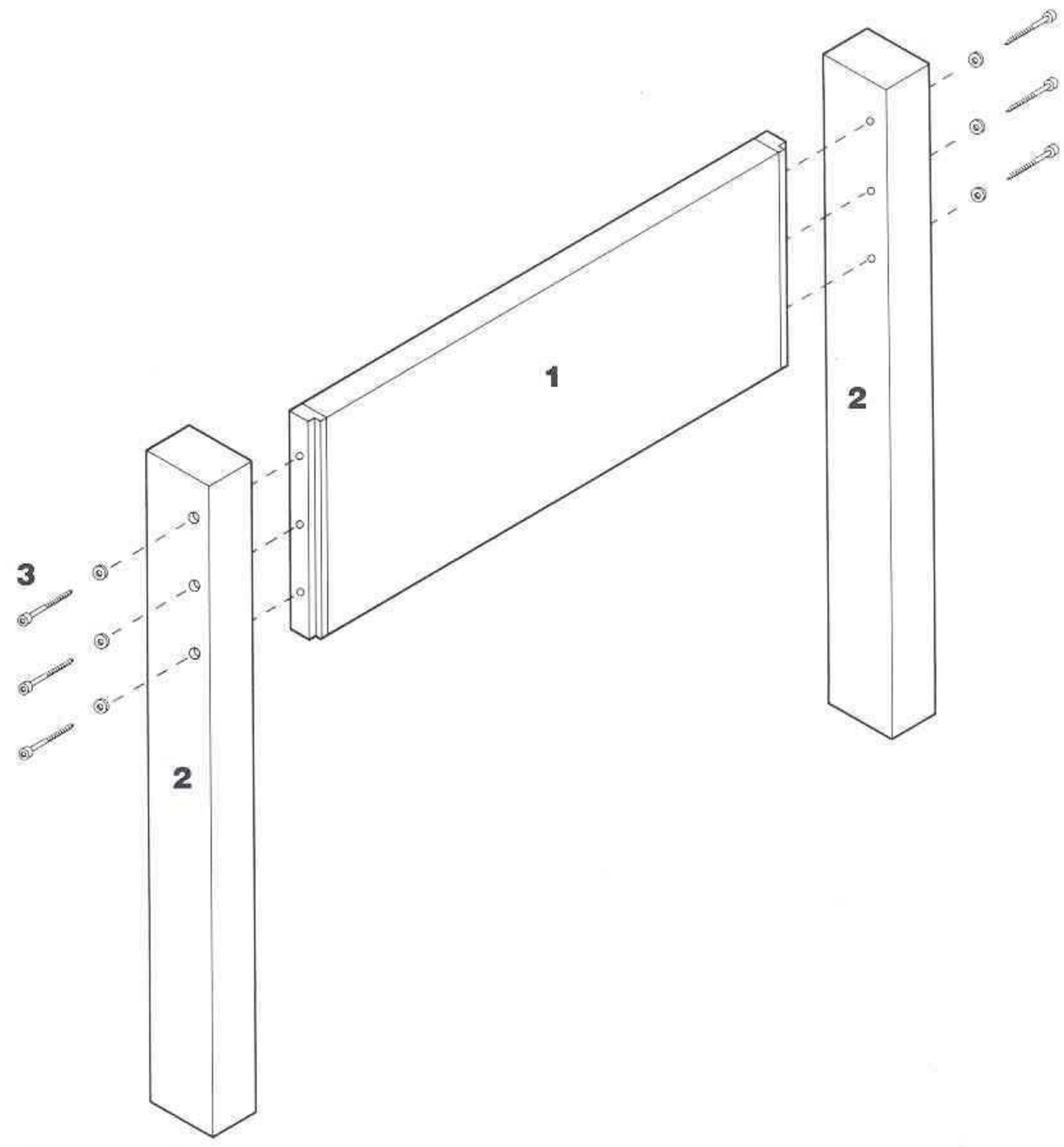

Exploded View

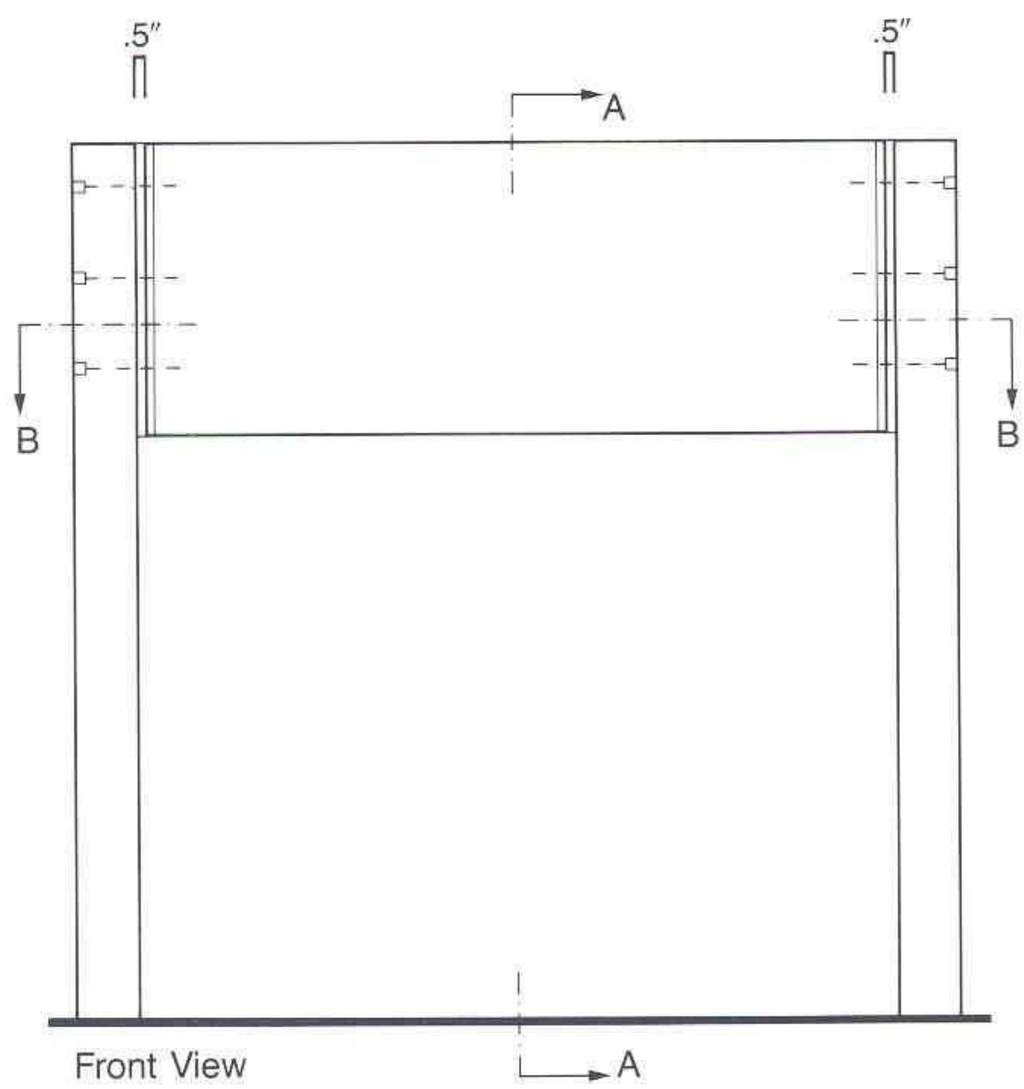

Front View

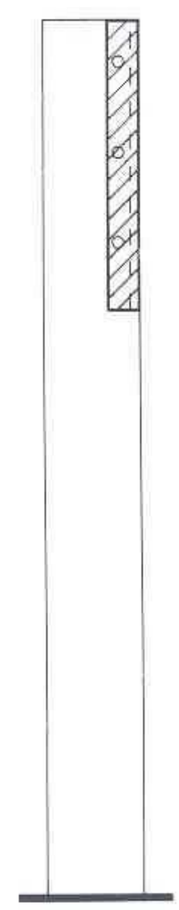

Cross Section A-A

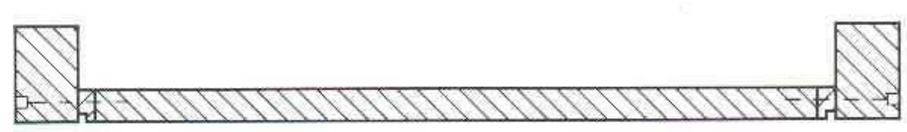

Cross Section B-B

All items listed below shall conform to material specifications as described on page B.3-3a for routed Redwood signs, unless otherwise instructed on this page.

1 Panel, 2″ thick with 2″ x 1.25″ endstrip. Dimensions of sign face indicate the panel including the endstrip.

2a Panels no greater than 24″ x 36″ shall be attached to wall surfaces using threaded studs protruding from back of sign. Studs shall be permanently affixed square to the face of the panel.

Silicone adhesive shall be used in wall holes receiving the threaded studs, and in generous amount on the remainder of the sign back. Wall surface shall be clean and free of loose particles to promote good adhesion of silicone. Use foam tape or other temporary bracing until permanent adhesives are set.

2b Panels greater than 24″ x 36″ shall be attached to wall surfaces using a metal cleat, receiving hardware in a routed slot. Metal cleat shall be .125″ aluminum, 2″ wide with length 8″ less than width of sign. It shall be screwed securely to the back of the sign face with No.12 flat head Phillips zinc plated wood screws. Cleat is to overlap routed groove with sufficient clearance to receive wall hardware. Appropriate hardware for wall material shall be used to securely fasten the panel (i.e. lead anchors, hollow-wall anchors, lag bolts, etc.). Silicone adhesive may be used in addition to mechanical fasteners to permanently secure sign panel to wall surface.

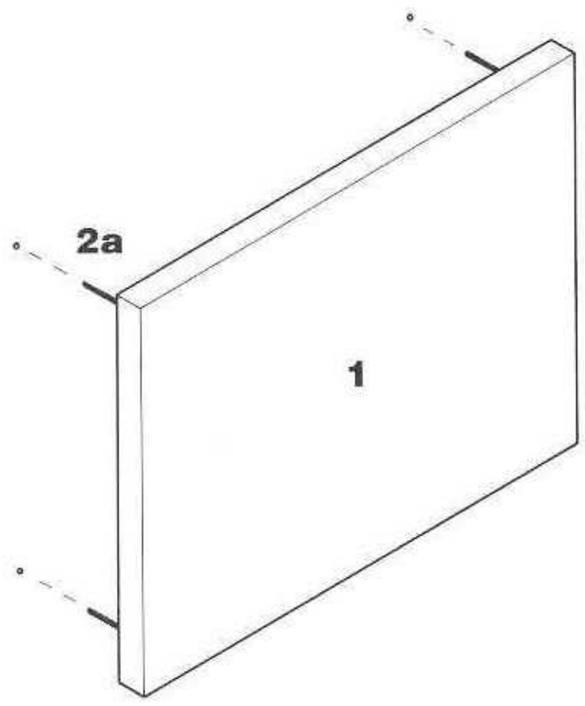

Exploded View (2a)

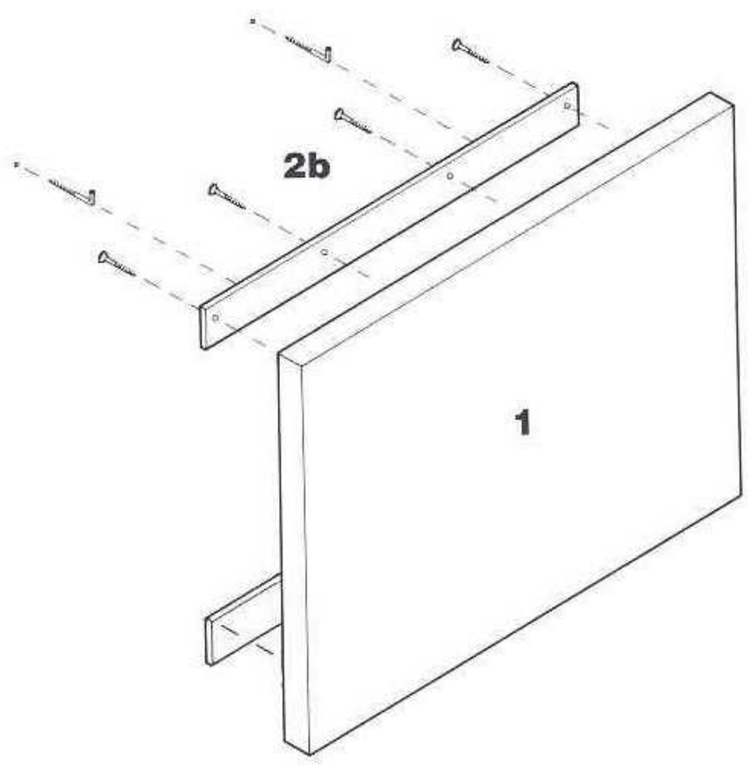

Exploded View (2b)

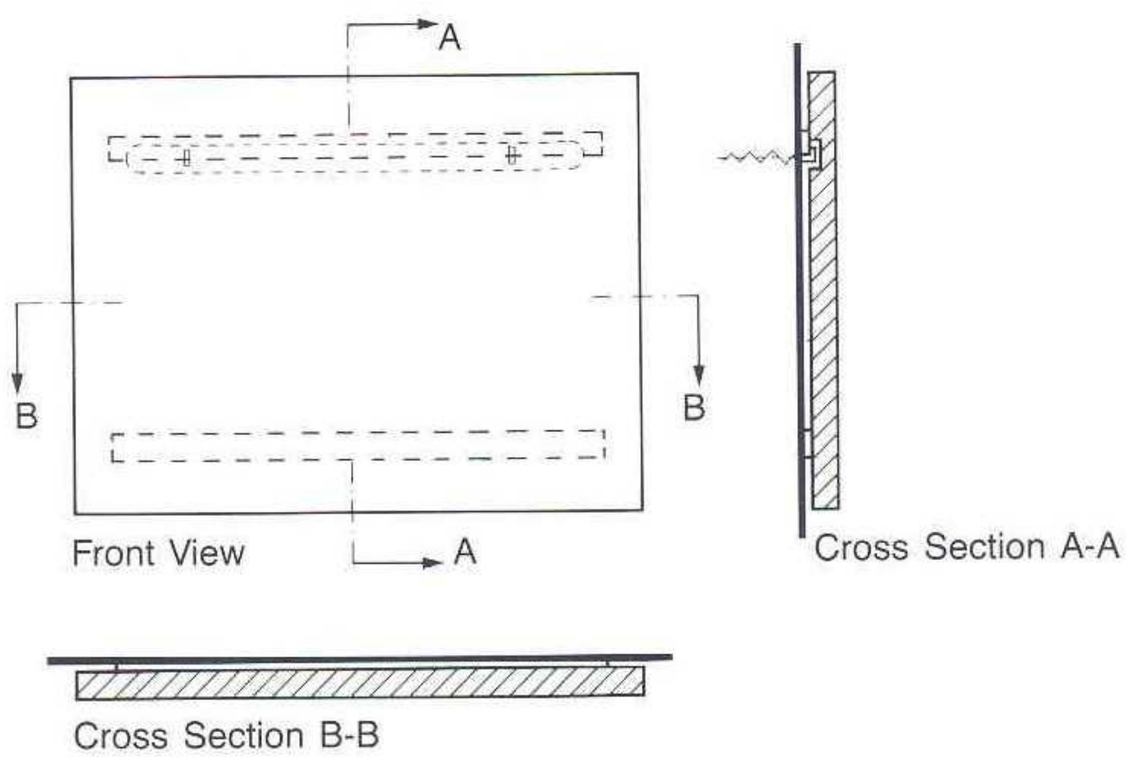

All items listed below shall conform to material specifications as described on page B.3-3a for routed Redwood signs, unless otherwise instructed on this page.

1 Solid or glue laminated post, 6″ x 6″. Graphics shall be routed directly in the sign post, not in an individual panel. Post size shown here reflects the HAGL and does not include the section under ground. For footing see page B.2a-b.

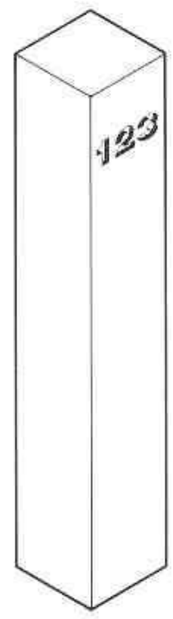

Isometric

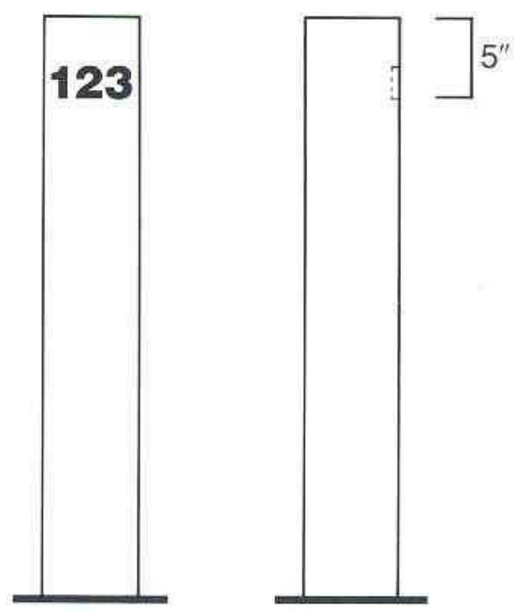

Front View Side View

Plan

1.1 Sign

1. Materials

Panel shall be fabricated from High Density Overlaid plywood (HDO), 60-60 non-oiled resin impregnated fiber, black in color. All Douglas Fir exterior, marine-grade, to meet product standard PS1-83; or all exterior plywood PS1-83 group 1, with B grade veneers on both sides. Each panel should be edge-branded marine-grade HDO EXT PS1-83; or HDO B-B G I EXT PS1-83, 7 PLY.

Panel shall be 0.75″ thick unless otherwise specified. Panel dimensions shall have a tolerance of ±.125″. No cleats or joints shall be permitted for panels with a dimension smaller than or equal to 10′-5″.

Panels shall have 0.187″ safety corner radius unless otherwise specified.

Edges shall be rounded or beveled to a radius of 0.09375″.

All surfaces shall be flat and smooth. Core gaps to be filled with polyester body filler, Bondo, or approved equal. Finish-sand all edges and panel face. Back surface shall be sanded with 50-60 grit sand paper.

All drilling shall be done with high-speed drills, using solid backing to avoid chipping.

All cutting shall be done with high-speed saws. Rotary saw blades to be carbide tipped. Power saws shall have little or no set and as much lead as possible. Blades on table saws shall not extend more than 1″, and not less than 0.5″ through panel. Panels will be fed through slowly to avoid damage to overlay.

Panels to be stored shall be stacked flat on a clean surface in an enclosed and well-ventilated area; do not store on concrete surfaces.

Wood frame shall be manufactured of construction heart redwood lumber. Lumber sizes for frame will vary depending on post dimensions. For nominal dimensions larger than 4″ x 4″, treated Douglas fir No.1 grade, or better, may be used. Dimension length of frame 2″ longer than finished panel to create a reveal along the sides. Lumber sizes vary depending on post dimensions.

Post Size	Lumber
6″	2″ x 4″
9″	4″ x 4″
12″	4″ x 4″

Intermediate support members shall be installed for large size panels.

Panel Size		Support Member(s)
0′- 0″	to 5′- 11″	0
6′- 0″	to 11′- 11″	1
12′- 0″	to 17′- 11″	2
18′- 0″	and up	3

Metal cross braces (Z-bars) shall be fabricated from aluminum 6061-T6 Z-bar, 2.687" x 3" x 2.687". For large panels, standards are provided on page B.2c, and on each sign specification pages for HDO signs.

Solid posts shall be fabricated of one piece construction heart redwood lumber per grading rules of the California Redwood Association, or better. For nominal dimensions larger than 4″ x 4″, treated Douglas fir No.1 grade or better, or treated southern yellow pine No.1 or better may be used. Material shall be well seasoned and free of any defects.

All post sizes may be no more than 0.5″ less than nominal dimensions, and will be sanded prior to finishing.

Douglas fir and southern yellow pine shall be weathered a minimum of one (1) year after installation prior to stain application.

Glue laminated posts can be used as an alternate and shall be constructed of clear heart, kiln dried redwood only.

All completed sign panel and post assemblies must be pre-drilled and assembled in the shop prior to shipment to check alignment and ensure proper fit once installed. Panels manufactured as separate units shall be pre-drilled with T-nuts and Z-bar braces attached to panel when manufactured.

1.2 Hardware

Panel attachment to post or brace shall be 3/8″ socket head cap bolts, 3/8″ washers and 4-prong straight barrel T-nuts. T-nut to be countersunk and backfilled with Bondo, or approved equal, flush to front of panel. Cap bolt head to be countersunk a minimum of 0.25″ below the surface of post. Over-tightening of hardware may damage sign panel.

Panel attachment to frame shall be
– 2″ x 2″ aluminum keyhole receiving plate, to be attached to panel with four (4) No.12 flat head wood screws. A slot of 0.5″ deep shall be routed to receive hex bolt.
– 0.375″ bolts with 0.5625″ hex heads and hex nuts. Bolt shall be threaded through frame leaving 0.125″ of shaft

1.2 Hardware
Continued

exposed on either side after attaching hex nut. Panel with keyholes is hung on hex head or nut. Four (4) keyholes shall be used per panel for dimensions up to 8′ - 0″. Larger panels must use six (6) plates per panel.

Wood frame assembly hardware shall be 2″ x 2″ or 3″ x 3″ aluminum angle brackets, to be attached to frame with six (6) 0.375″ lag bolts, or approved equal.

Wood frame attachment hardware shall be 0.5″ x 6″ lag bolts to attach frame to sign posts.

1.3 Laminates

Adhesive for post construction and duplex HDO panels shall be phenolic resornicol moisture resistant, or approved equal. Application must be performed within 15 minutes between the first glue application and the final setting of the clamps. The surface of each joint face shall be completely covered with adhesive.

Air temperature shall be between 70-90 degrees Fahrenheit during drying of boards, glue application and curing process. Lumber to be dried not less than 24 hours prior to gluing.

Moisture contents of lumber to be glued shall be between 12-15%, with a 3% margin between wettest and driest piece.

Surface joints shall be smooth and true, free from machine joining marks and chipped or loosened grain.

1.4 Finishes

Paint shall be Benjamin Moore No.120-63 poly-silicone enamel, or approved equal. Apply one (1) coat to the back and edge of the panel as a primer, prior to application of retro-reflective sheeting, and one (1) coat after application to seal the edge. Sheeting shall be masked before painting, and shall be removed immediately after enamel application. A minimum of 4 ± 0.25 mil. dry film thickness shall be applied (two generous coats). Front of panel where retro-reflective sheeting will be applied shall not be painted.

Stain shall be semi-transparent waterproof, anti-bacterial redwood stain to match Corps Brown, Olympic brand redwood stain No. 715, or approved equal. Apply with brush or roller to posts. Stain shall be thoroughly mixed prior to and during application to ensure even pigmentation. Posts will be dried a minimum of 24 hours prior to shipping.

Paint room facilities shall be well-ventilated, dust-free and enclosed. Air temperature shall not be less than 65 degrees Fahrenheit during application of paint.

Cleaning of the panels shall be performed prior to application of paint or retro-reflective sheeting, to remove parting agent on panel surface. Areas to be painted shall be scrubbed with petroleum hydrocarbon solvent, Toluene, Socal No.1, or approved equal, using an abrasive synthetic fiber pad. Wipe the surface clean with mineral spirits.

Finished sanding shall be performed prior to the application of the first and second coat of paint. Paint must be thoroughly dried before sanding. All sanding residue shall be removed from the sign with tack cloth. Do not sand panel after applying the second coat of finish paint.

2. Graphics

2.1 Retro-reflective sheeting

Background and legend shall be engineer grade, premium quality, wide angularity enclosed lens retro-reflective material to meet or exceed the standards of:

– General Services Administration, Federal Supply Service specification *L-S-300-C, Reflectivity 1.*

– U.S. Department of Transportation, Federal Highway Administration, *Standard Specifications for Construction of Roads and Bridges on Federal Highway Projects*, current edition *FP-85 Sections 633.06* and *718.01.*

Background and legend shall use sheeting from the same manufacturer. Mixing of sheeting from different manufacturers shall not be permitted.

No more than twelve (12) months will have elapsed from date of purchase to the date of application.

Background application to HDO Plywood shall be as described by the manufacturer and approved by the designated representative of the Corps of Engineers. Corps Brown and all highway colors may be either pressure-sensitive or heat-activated applied. Special waterway colors are only available with pressure-sensitive adhesive.

Panels shall be covered with one unspliced sheet, unless the dimension is larger than 48″ in vertical direction. Splices shall be positioned so as not to fall within legends. Top piece shall overlap bottom piece by a minimum of 0.5″, but not more than 0.75″. Spliced sheets shall be color matched.

Background shall be adhered to front of sign panel prior to legend application.

2.1 Retro-reflective sheeting
Continued

Legend application shall be as described by the manufacturer and approved by the designated representative of the Corps of Engineers and may be either pressure-sensitive or heat-activated applied. No loose or curled edges, bubbles or blisters shall be permitted.

Legend shall be adhered to sign panel after application of background sheeting.

Top edge treatment shall be Avery No.961, 3M No.639 clear film 3" wide, or approved equal. Film shall be applied in 24" strips, beginning from each outside edge and taping toward center of sign. Film shall overlap at least 2" at each joint.

Heat-activated sheeting shall be double cycled through the vacuum applicator, one time when applying the background sheeting and one time when applying the legend.

2.2 Silkscreen

Screen printing may be used to make signs that are not Corps Brown assuming that the color stability, retro-reflective qualities and overall durability are equal. The decision to use screen printing versus computer cut and applied legends should be based on which method is most cost effective for the number of signs required. If lemon yellow Warning or Caution signs with cut vinyl black legends are being vandalized, then they should be manufactured with black screen-printed legends.

Formulation cards shall be filed for each individual ink color to ensure consistency of the product. Filed information shall include, but is not limited to, ink formula with designated color code, thinner and retarder adjustments in grammes, batch numbers of inks, thinner and retarder, mesh tension, emulsion coating and exposure units/time. When semi or fully automatic equipment is used, additional information shall be filed for: off contact, peel, speed, squeegee, flood speed, curing temperature and belt speed.

Inks shall have a light fastness rating of 7-8 on the DIN 16525 (Wool Scale) or equivalent industry standard, and must be able to withstand 375 degrees Fahrenheit (190 degrees Celsius) without noticeable change of pigmentation.

Ink type shall be acceptable to manufacturer of substrate.

Inks shall be formulated using a computer colorimetry system and shall be matched with a tolerance of ± 0.1 grammes.

Colors shall conform to the listing in Section 4 in this manual and/or material color control samples on file with the National Sign Program Manager.

Ink cure and compatibility are to be confirmed by cross hatch tape test, or equivalent industry standard.

Thinner and retarder used in the adjustment of the inks shall be specified by the ink manufacturer. Additions shall be made by weight with a tolerance of ±0.1 grammes and filed on the formulation card.

Screens shall be 254 polyester monofilament, mesh tensioned to no less than 18 newtons. Mesh tension, emulsion coating and exposure units/time are to be established and filed on the formulation card.

Printing shall be performed on semi or fully automatic equipment with a repeatability tolerance of ± 0.004" in conjunction with a forced air conveyor drier. Off contact, peel, speed, squeegee, flood speed, curing temperature and belt speed are to be established and filed on the formulation card.

A fiberglass laminated urethane squeegee set at a 75 degree angle is to be used.

All items listed below shall conform to material specifications as described on page B.4 through B.4b for HDO plywood signs, unless otherwise instructed on this page.

1 Panel, 0.75" thick backed with 4" x 0.75" HDO strips glue laminated flush to the edge of the panel. Strips to be laminated prior to finish work.

2 Frame, 2" x 4" or 4" x 4" lumber. Length of frame to be sized 2" longer than panel to create a 1" reveal on either side. Lumber sizes vary depending on post dimensions.

3 Solid or glue laminated post, 4" x 4", 4" x 6", 9" x 8", or 12" x 12". The dimension parallel to the sign face shall be equal to the Capital Letter Height (A).

Post size shown here reflects the HAGL and does not include the section under ground. For footing see page B.2a-b.

4a-b Panel attachment hardware. For attachment see detail 1, page B.7-1.

5 Frame assembly hardware. For attachment see detail 2, page B.7-1.

6 Frame attachment hardware.

NOTE: Intermediate support member(s) as shown are not representative for this particular sign type. Use depends on the length of each individual sign panel, see frame specification page B.4-4b

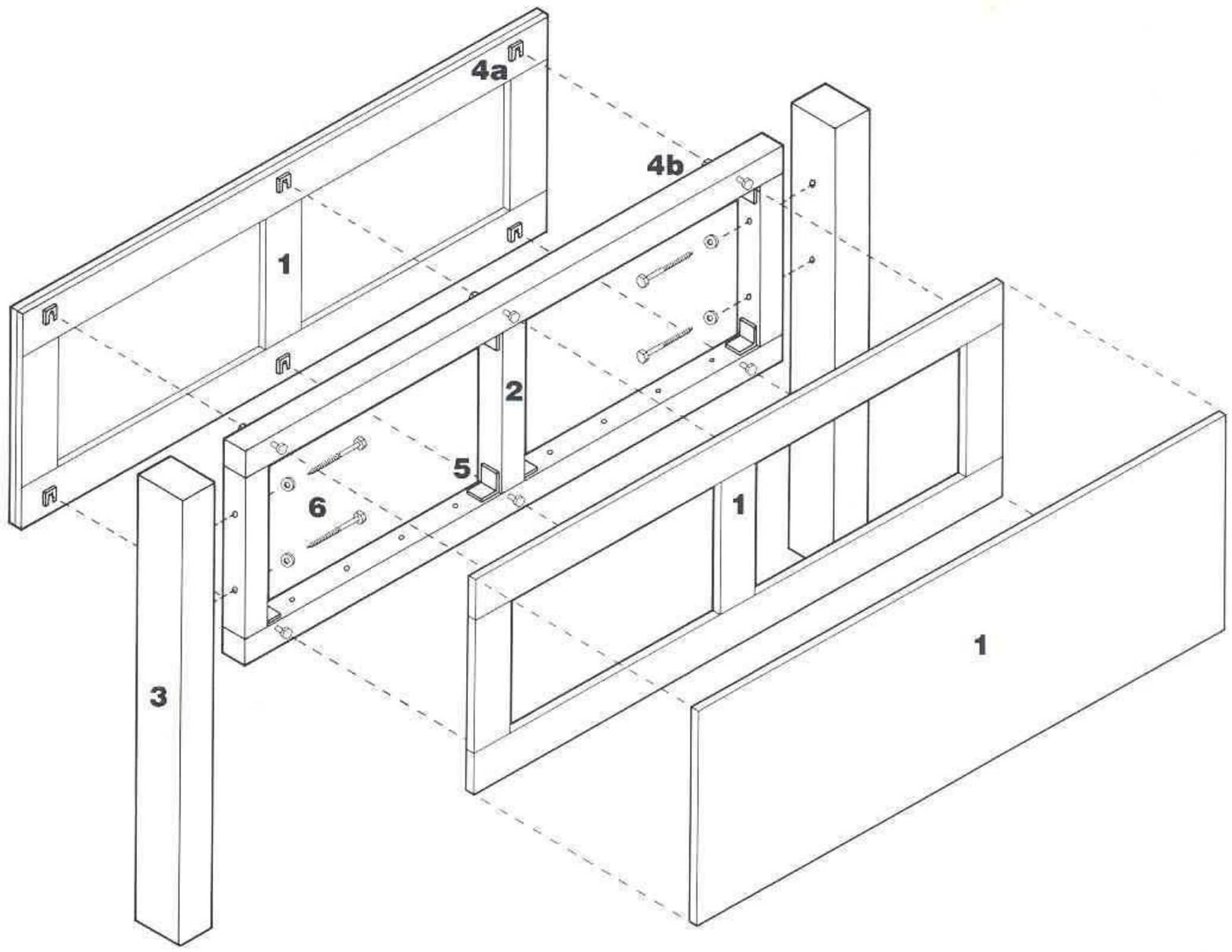

Exploded View

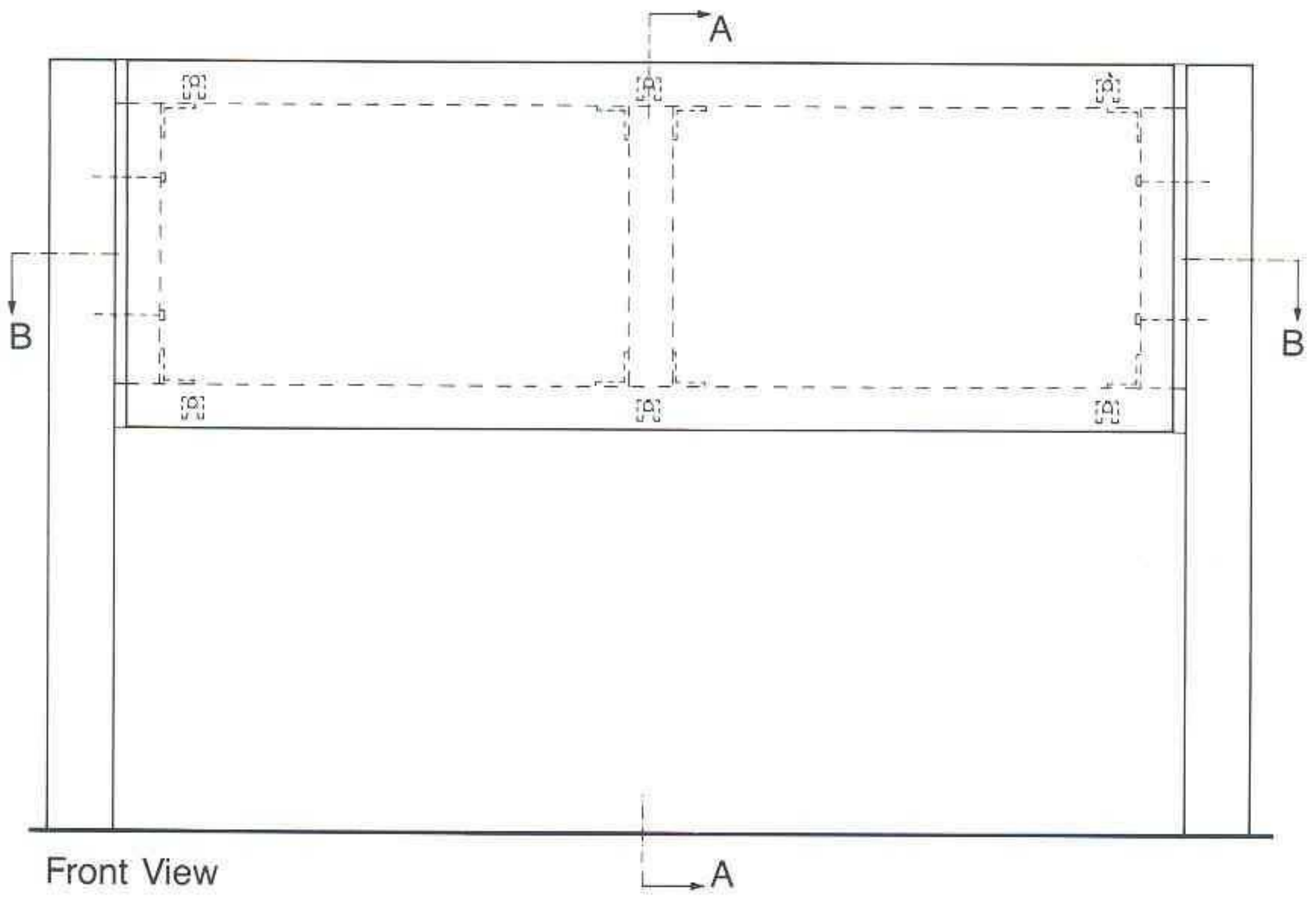

Front View

Cross Section A-A

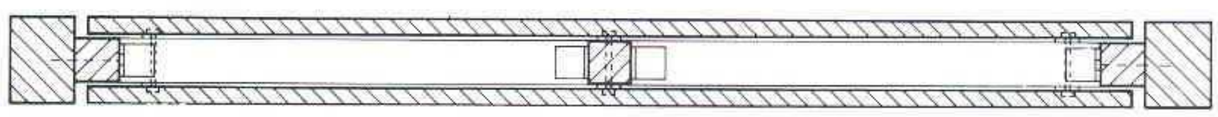

Cross Section B-B

All items listed below shall conform to material specifications as described on page B.4 through B.4b for HDO plywood signs, unless otherwise instructed on this page.

1 Panel, .075" thick backed with 4" x 0.75" HDO strips, glue laminated flush to the edge of the panel, Strips to be laminated prior to finish work.

2 Frame, 2" x 4" (4" nominal dimension facing back of sign panel) or 4" x 4" lumber. Length of frame to be sized 1" longer than panel to create a 0.5" reveal on both sides of the panel.

3 Solid or glue laminated post, 4" x 4", 4" x 6", or 6" x 6". The dimension parallel to the sign face shall be equal to the Capital Letter Height (A). Post size shown here reflects the HAGL and does not include the section under ground. For footing see page B.2a-b.

4a-b Panel attachment hardware. Hex bolt and receiving keyhole plates mount 4" inboard from outside edges of panel. For panels longer than 56" an additional bolt and keyhole plate should be placed at the center of panel along top and bottom. For attachment see detail 1, page B.7-1.

5 Frame assembly hardware. For attachment see detail 2, page B.7-1

6 Frame attachment hardware.

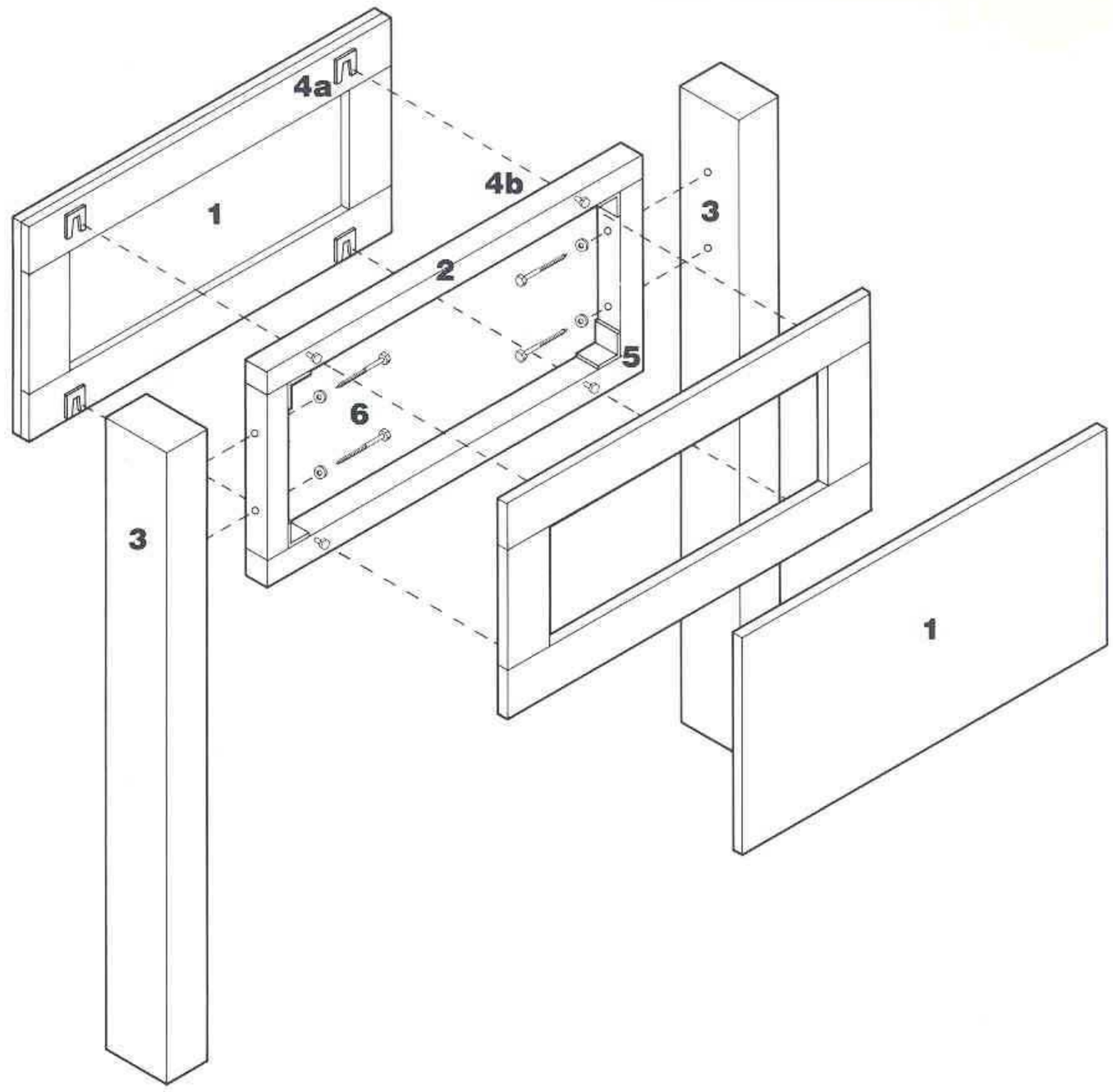

Exploded View

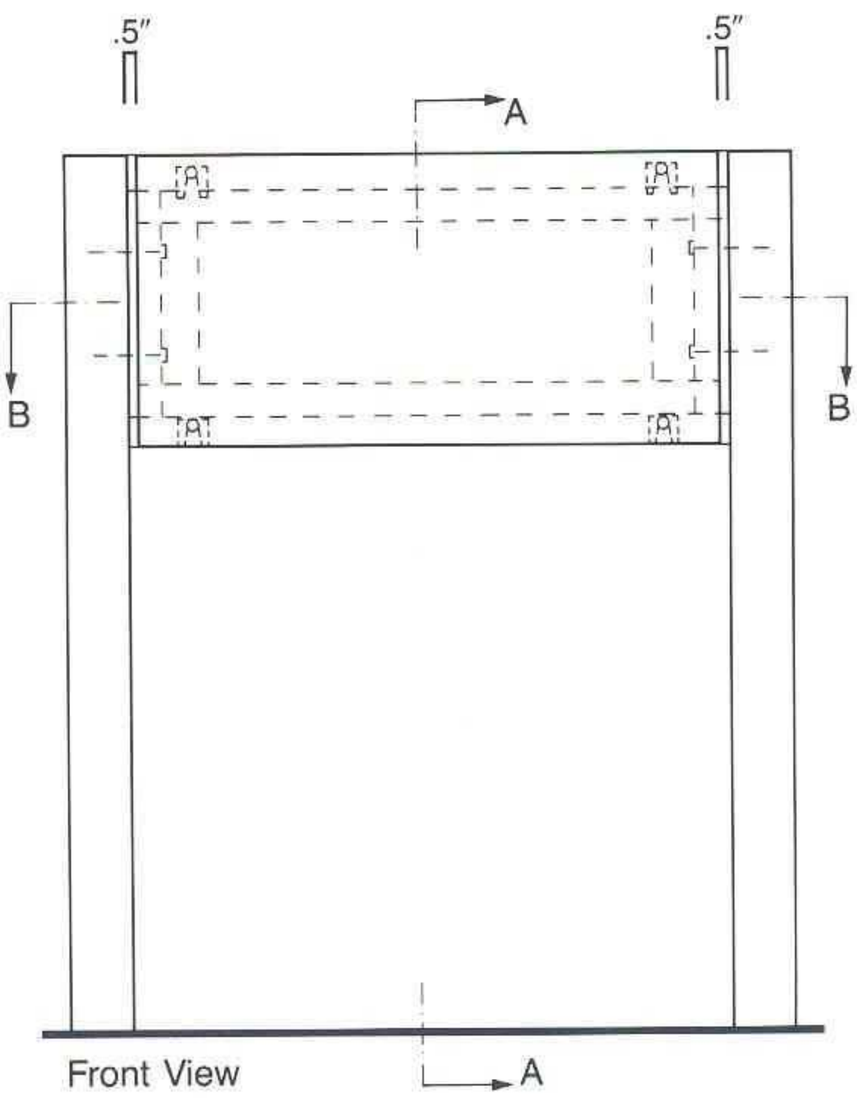

Front View

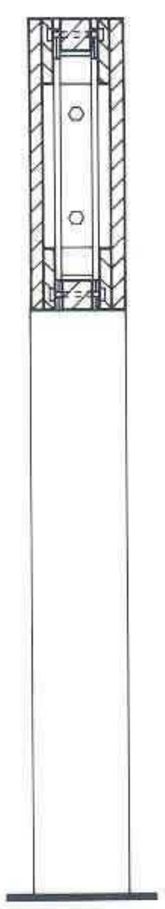

Cross Section A-A

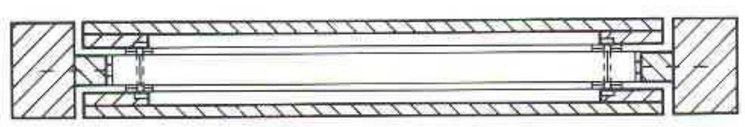

Cross Section B-B

All items listed below shall conform to material specifications as described on page B.4 through B.4b for HDO plywood signs, unless otherwise instructed on this page.

1 Panel, 0.75" thick.

2 Solid or glue laminated post, 4" x 4", 4" x 6", 6" x 8", or 8" x 8". Post size shown here reflects the HAGL and does not include the section under ground. For footing see page B.2a-b.

3a-c Panel attachment hardware. For attachment see detail 5, page B.7-2.

NOTE: Double-faced signs shall be installed identically to single-faced signs, with a second sign panel mounted flush to the back of the sign post, see detail 6, page B.7-2. After mounting, cover socket head cap screw with circular patch of retro-reflective sheeting matching panel sign face.

NOTE: Vertically align T-nut to center of post. Horizontally place T-nut between 3" - 6" from top and bottom edges of the sign. Actual location will depend on size of the panel.

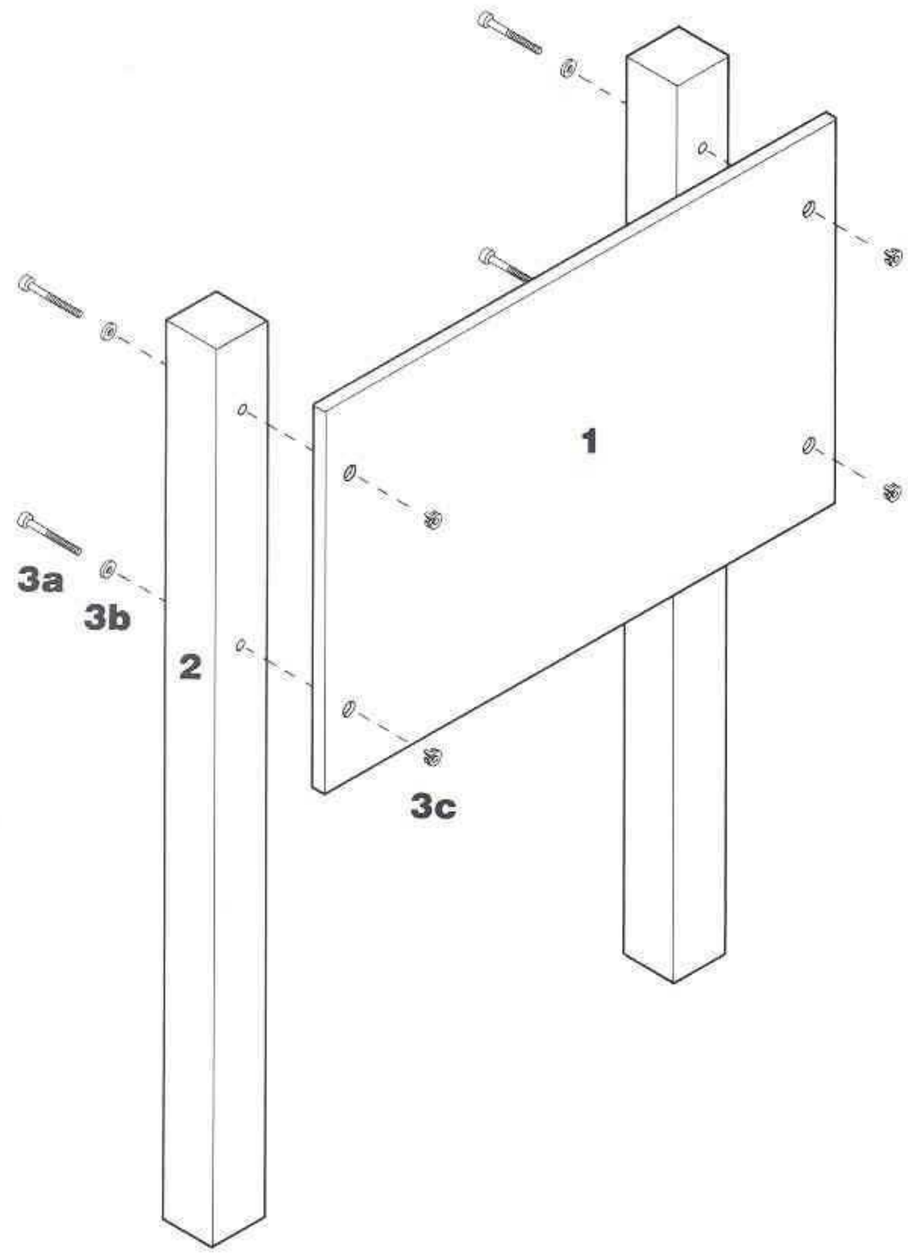

Exploded View

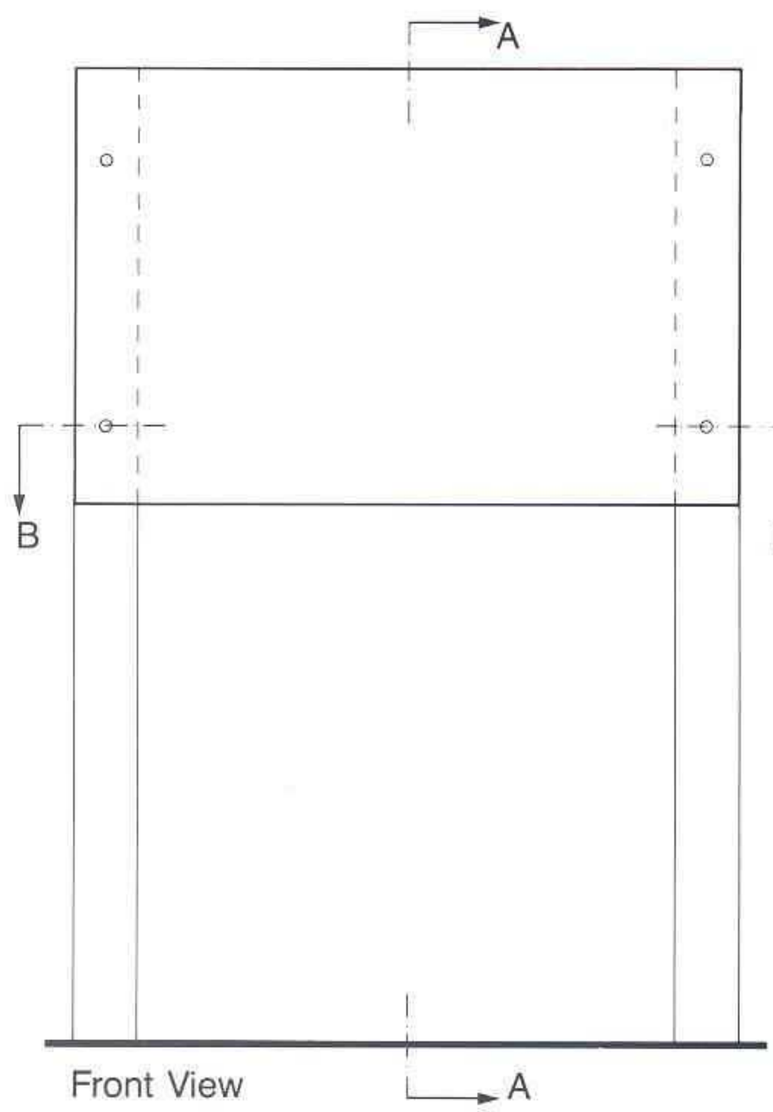

Front View

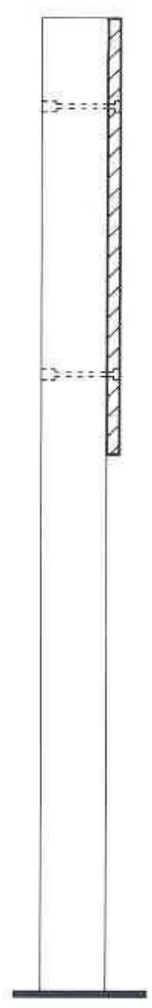
Cross Section A-A

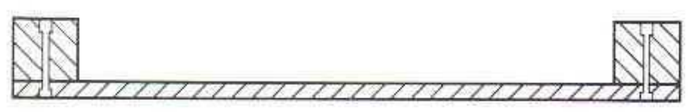
Cross Section B-B

All items listed below shall conform to material specifications as described on page B.4 through B.4b for HDO plywood signs, unless otherwise instructed on this page.

1 Panel, 0.75″ thick.

2 Solid or glue laminated post, 4″ x 4″, 4″ x 6″, 6″ x 8″, or 8″ x 8″. Post size shown here reflects the HAGL and does not include the section under ground. For footing see page B.2a-b.

3a-c Panel attachment hardware. For attachment see detail 5, page B.7-2.

NOTE: Double-faced signs shall be installed identically to single-faced signs, with a second sign panel mounted flush to the back of the sign post, see detail 6, page B.7-2. After mounting, cover socket head cap screw with circular patch of retro-reflective sheeting matching panel sign face.

NOTE: Vertically align T-nut to center of post. Horizontally place T-nut between 3″ - 6″ from top and bottom edges of the sign. Actual location will depend on size of the panel.

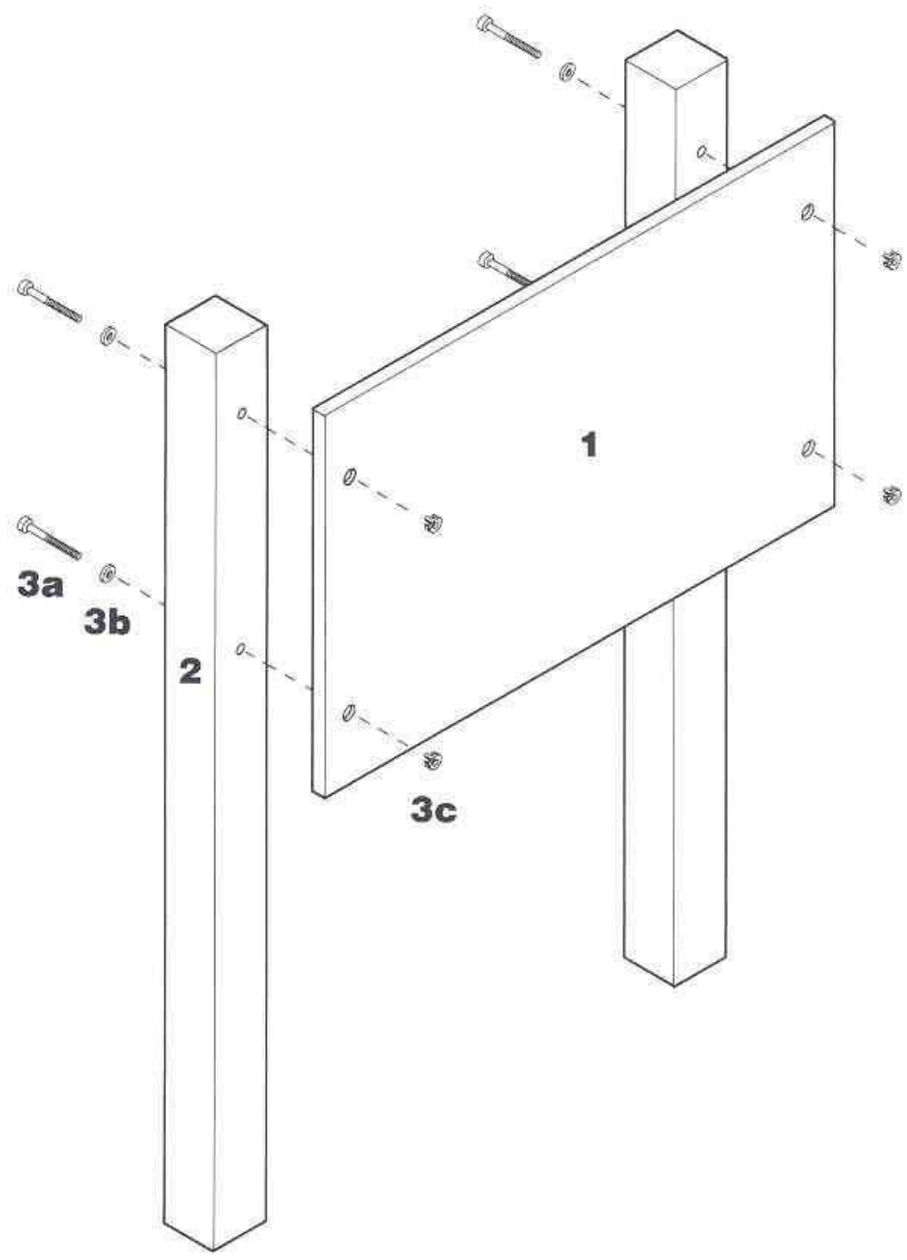

Exploded View

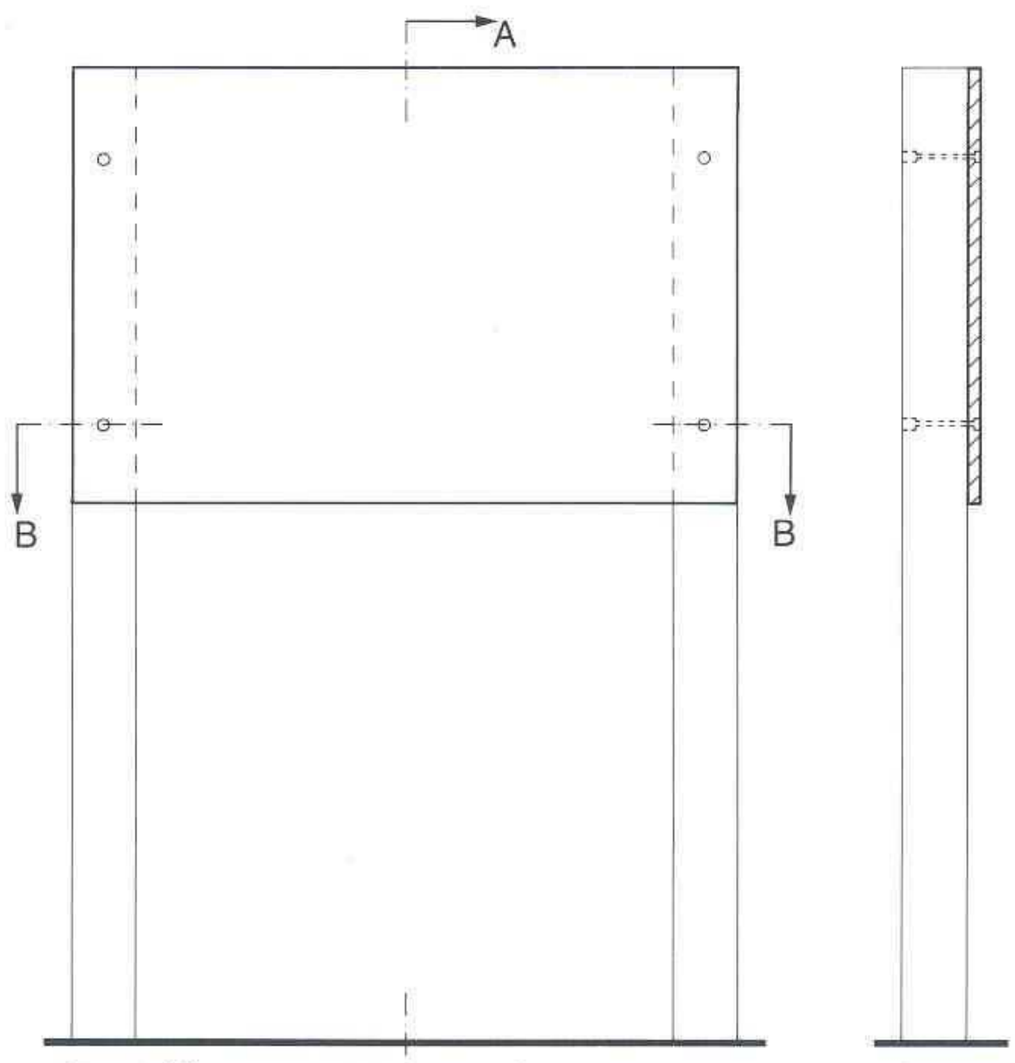

Front View

Cross Section A-A

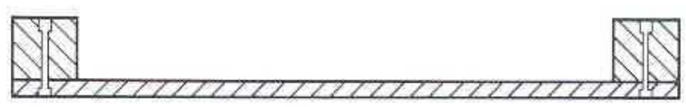
Cross Section B-B

Approach Roadway Directional signs.

The diagram below identifies the specific design requirements to fabricate each different size of approach roadway directional sign as shown on page B.4. The first three columns identify the size of the panel and the following five columns list the correct size and number of parts to construct the sign.

Sign panels with a capital letter height of 9″ shall follow intent of the basic construction drawings as shown on page B.4, but shall be engineered to meet local requirements on a site-by-site basis. Modifications may include, but are not limited to thicker panels, larger dimension posts, additional "Z" bars and larger footings.

Capital Letter Height	Maximum Panel Length	Panel Size (sq. in.)	Post Size	Post Number	"Z" Bar	Footing Cross Section	Footing Depth
4"	60"	0 - 2500	4" x 6"	2	0	1' - 6"	4' - 0"
	80"	0 - 1400	4" x 4"	2	2	1' - 6"	4' - 0"
		1400 - 3000	4" x 6"	2	2	1' - 6"	4' - 0"
		3000 - 3400	4" x 8"	2	2	2' - 0"	4' - 0"
	96"	0 - 2700	4" x 6"	2	2	1' - 6"	4' - 0"
		2700 - 4200	4" x 8"	2	2	2' - 0"	4' - 0"
	104"	0 - 2900	4" x 6"	2	2	1' - 6"	4' - 0"
		2900 - 4500	4" x 8"	2	2	2' - 0"	4' - 0"
6"	84"	0 - 3200	6" x 6"	2	2	1' - 6"	4' - 0"
		3200 - 4200	6" x 6"	2	2	1' - 6"	4' - 0"
		4200 - 5200	6" x 8"	2	2	2' - 0"	4' - 0"
	102"	0 -2700	6" x 6"	2	2	1' - 6"	4' - 0"
		2700 - 3700	6" x 6"	2	3	1' - 6"	4' - 0"
		3700 - 6700*	6" x 8"	2	3	2' - 0"	4' - 0"
	120"	0 - 4500	6" x 6"	3	0	1' - 6"	4' - 0"
		4500 - 5800	6" x 6"	3	0	2' - 0"	4' - 0"
		5800 - 7800*	6" x 8"	3	0	2' - 0"	4' - 0"
	138"	0 -5000	6" x 6"	3	0	1' - 6"	4' - 0"
		5000 - 9000*	6" x 8"	3	0	2' - 0"	4' - 0"
	156"	0 -6400	6" x 6"	3	2	2' - 0"	4' - 0"
		6400 - 7800	6" x 8"	3	2	2' - 0"	4' - 0"
		7800 - 10,200*	6" x 8"	3	3	2' - 0"	4' - 0"

*Panel may require horizontal splice in HDO

Project Roadway Directional signs.

The diagram below identifies the specific design requirements to fabricate each different size of project roadway directional sign as shown on page B.4. The first three columns identify the size of the panel and the following five columns list the correct size and number of parts to construct the sign.

Capital Letter Height	Maximum Panel Length	Panel Size (sq. in.)	Post Size	Post Number	"Z" Bar	Footing Cross Section	Footing Depth
2"	54"	0 - 1100	4" x 4"	2	0	1' - 6"	4' - 0"
3"	60"	0 - 1800	4" x 6"	2	0	1' - 6"	4' - 0"
	78"	0 - 2400	4" x 6"	2	2	1' - 6"	4' - 0"
4"	60"	0 - 2400	4" x 6"	2	0	1' - 6"	4' - 0"
	86"	0 - 3800	4" x 6"	2	2	1' - 6"	4' - 0"

All items listed below shall conform to material specifications as described on page B.4 through B.4b for HDO plywood signs, unless otherwise instructed on this page.

1 Panel, 0.75″ thick. Panels using a sign type code "PS" shall have corners with a radius matching the outside borderline provided on the artwork (see page 8.31). All other sign types shall have the specified safety radius.

2 Solid or glue laminated post 4″ x 4″ or 4″ x 6″. Post size shown here reflects the HAGL and does not include the section under ground. For footing see page B.2a-b.

3a-c Panel attachment hardware. For attachment see detail 5, page B.7-2. Vertically center T-nuts on both post and panel. Horizontally place T-nuts between 1.5″- 3″ from top and bottom edges of sign. Actual location will depend on size of panel.

NOTE Double-faced signs shall be installed identically to single-faced signs, with a second sign panel mounted flush to the back of the sign post, see detail 6 page B.7-2. After mounting, cover socket head cap screw with circular patch of retro-reflective sheeting matching panel sign face.

NOTE: National Trail Markers (9″ - 18″) should be positioned in such a way, that the top of the post is not seen from the front.

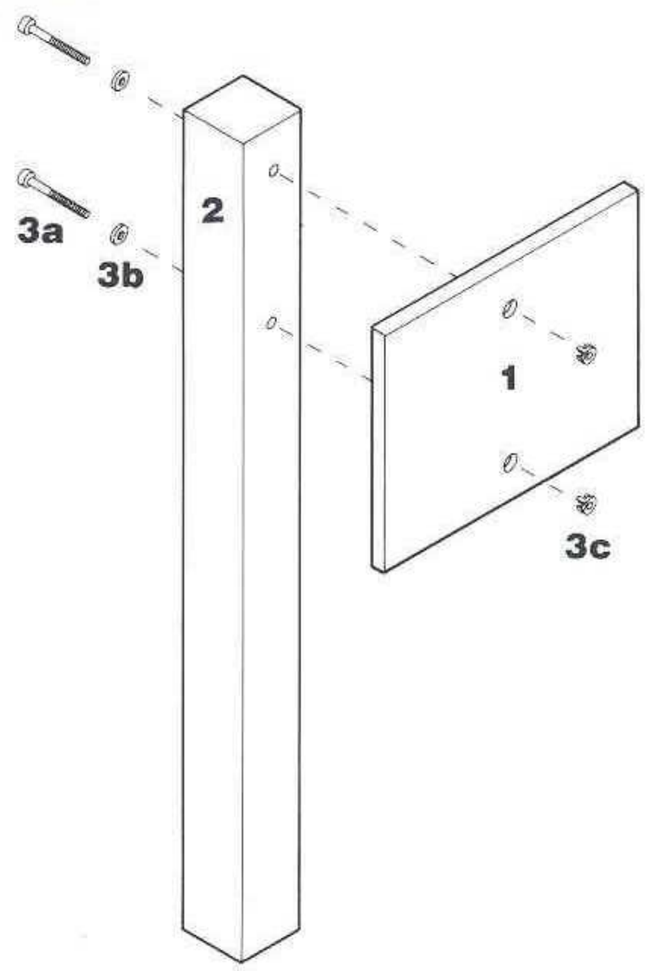

Exploded View

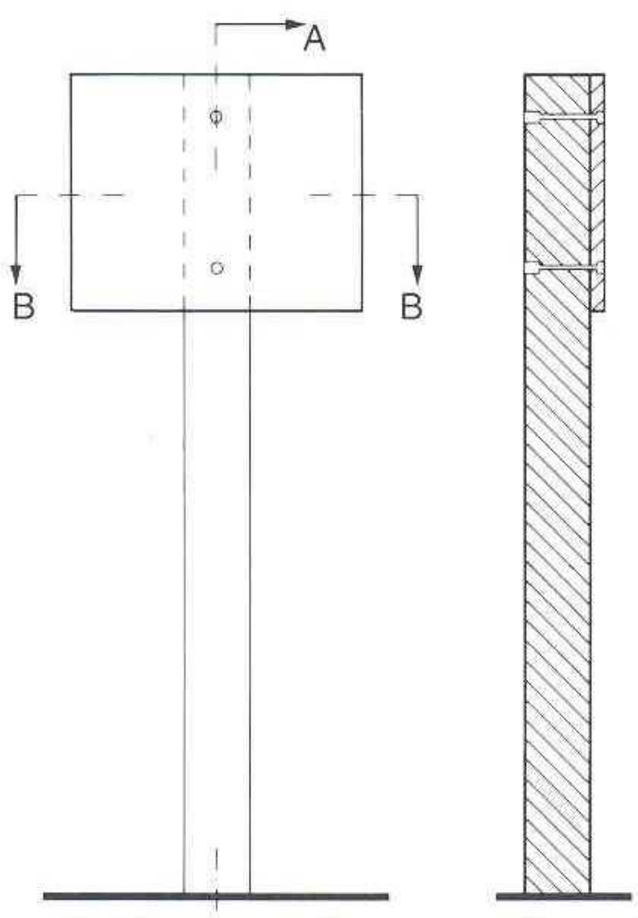

Front View

Cross Section A-A

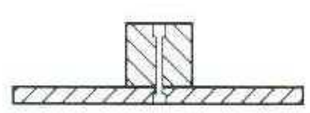
Cross Section B-B

All items listed below shall conform to material specifications as described on page B.4-4b for HDO plywood signs, unless otherwise instructed on this page.

1 Panel, .75″ thick backed with 4″ x .75″ HDO strips, glue laminated flush to the edge of the panel. Strips to be laminated prior to finish work.

2a Panels no greater than 24″ x 36″ shall be attached to wall surfaces using threaded studs permanently affixed square to the face of the panel.

Silicone adhesive shall be used in wall holes receiving the threaded studs, and in generous amount on the remainder of the sign back. Wall surface shall be clean and free of loose particles to promote good adhesion of silicone. Use foam tape or other temporary bracing until permanent adhesives are set.

2b Panels greater than 24″ x 36″ shall be attached to wall surfaces using a metal cleat, receiving hardware in a routed slot. Metal cleat shall be .125″ aluminum, 2″ wide with length 8″ less than width of sign. It shall be screwed securely to the back of the sign face with No.12 flat head Phillips zinc plated wood screws. Cleat is to overlap routed groove with sufficient clearance to receive wall hardware. Appropriate hardware for wall material shall be used to securely fasten the panel (i.e. lead anchors, hollow-wall anchors, lag bolts, etc.). Silicone adhesive may be used in addition to mechanical fasteners to permanently secure sign panel to wall surface.

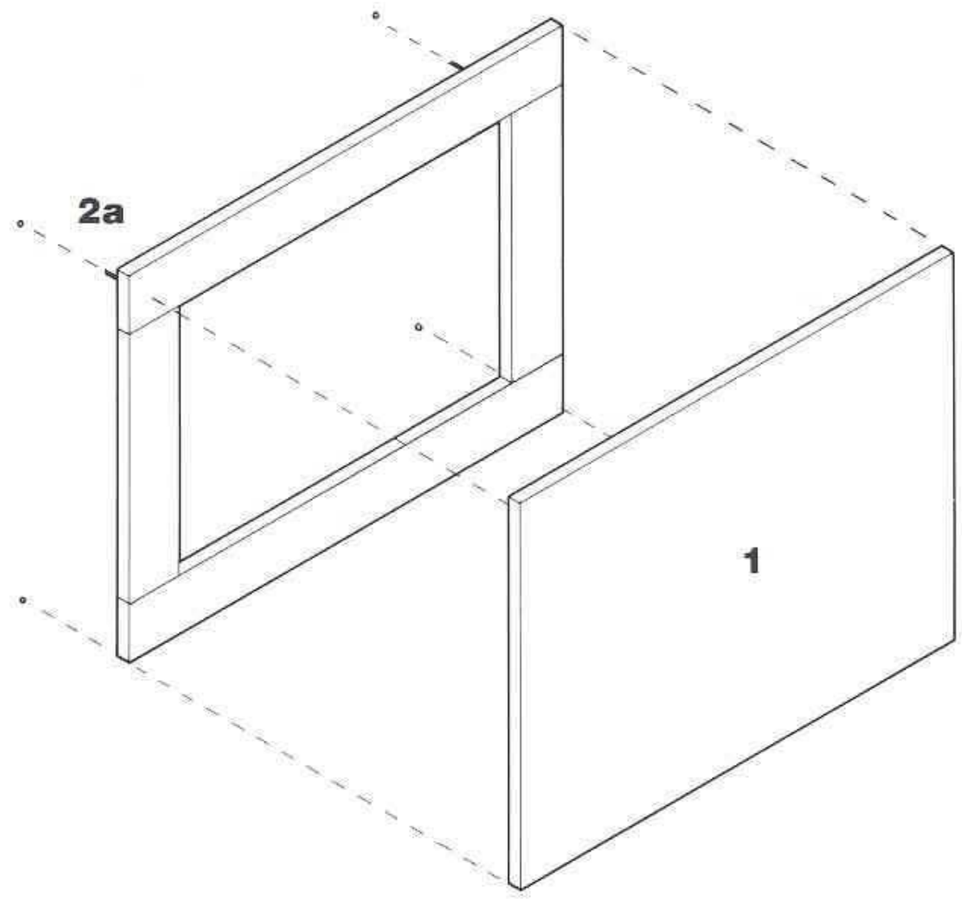

Exploded View (2a)

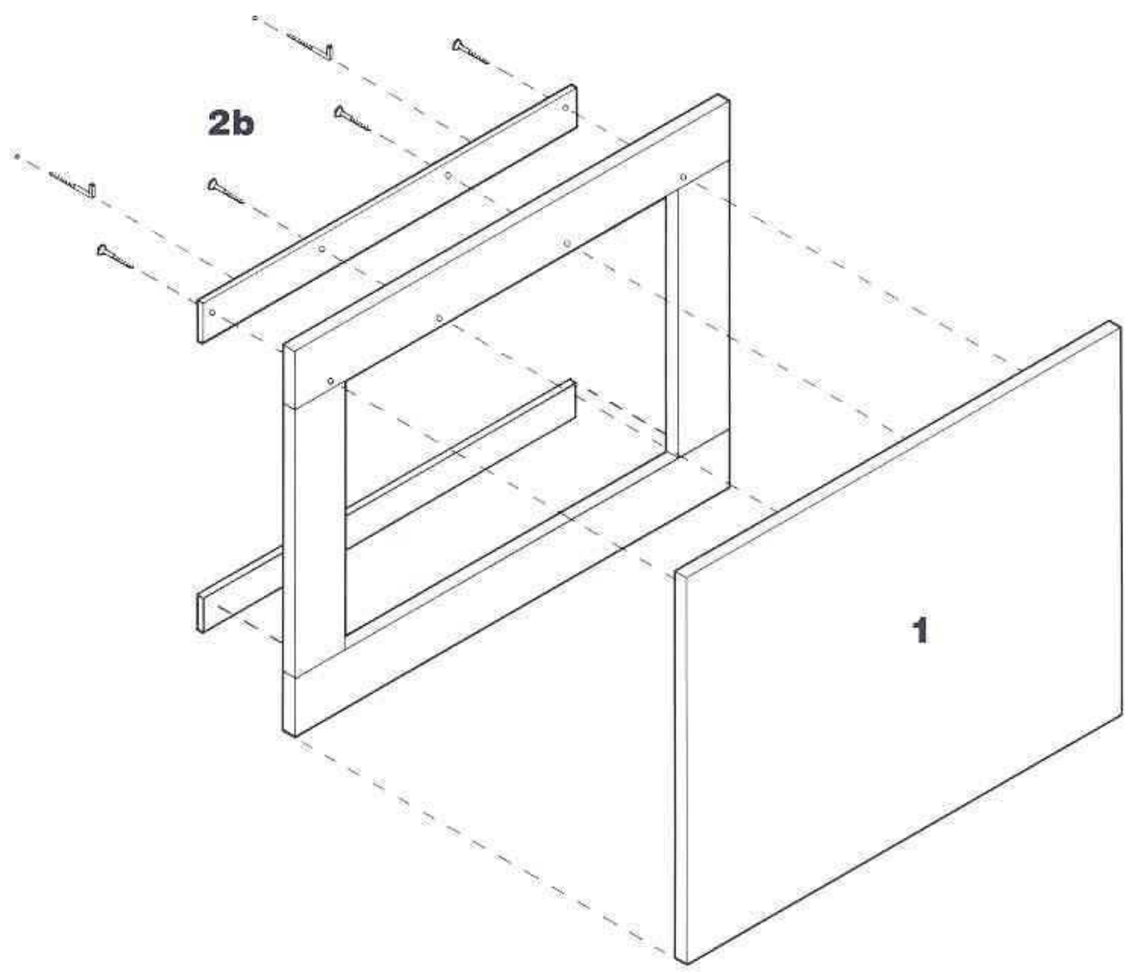

Exploded View (2b)

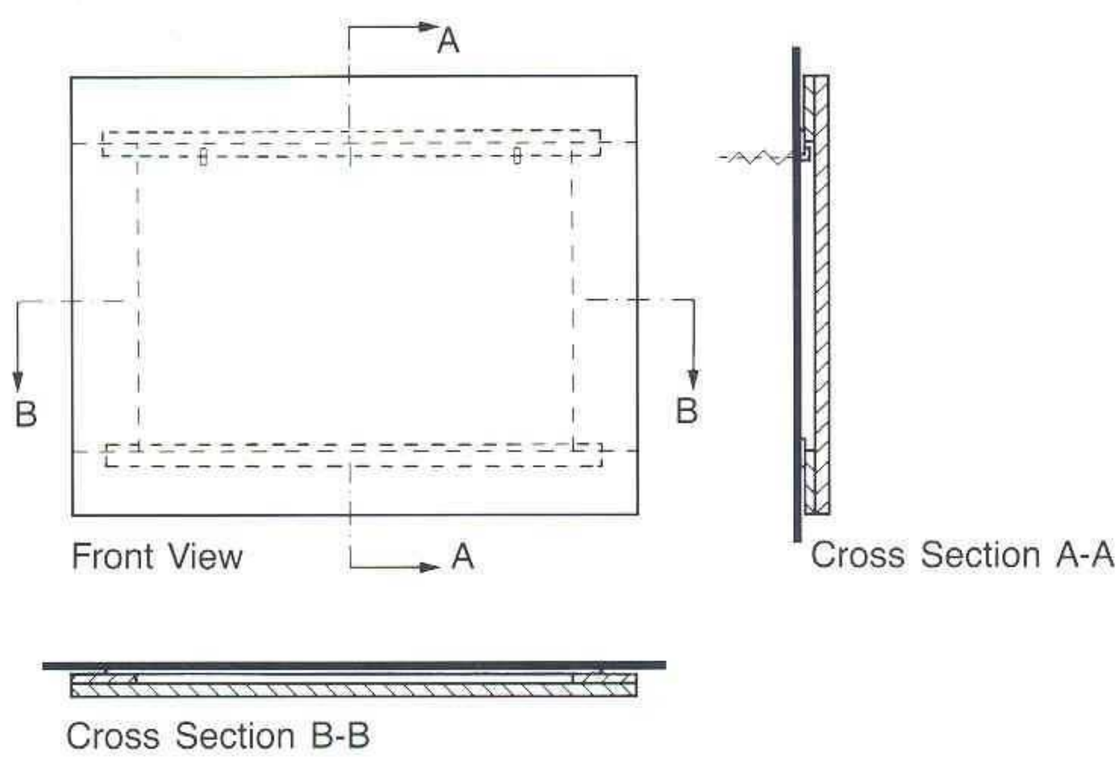

All items listed below shall conform to material specifications as described on page B.4 through B.4b for HDO plywood signs, unless otherwise instructed on this page.

1 Panel, 0.75″ thick, to be laminated to sign post with silicone adhesive.

2 Solid post, 4″ x 4″ or 6″ x 6″. Post size shown here reflects the HAGL and does not include the section under ground. For footing see page B.2a-b.

3 Panel attachment hardware. For attachment see detail 5, page B.7-2. T-nut shall be centered vertically and horizontally on panel.

NOTE: To protect the end grain of the post from water damage, the top is cut at a 10° angle to accommodate water run off.

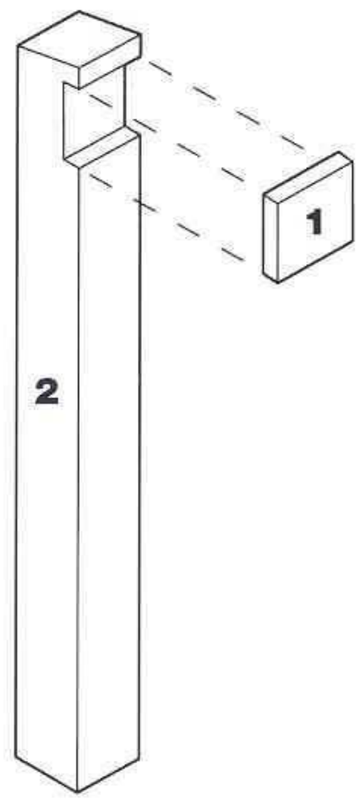

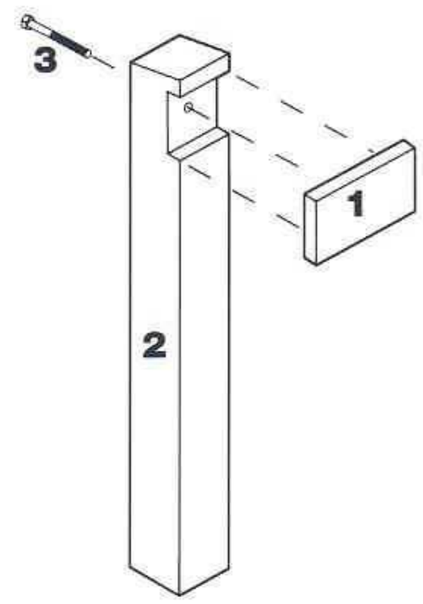

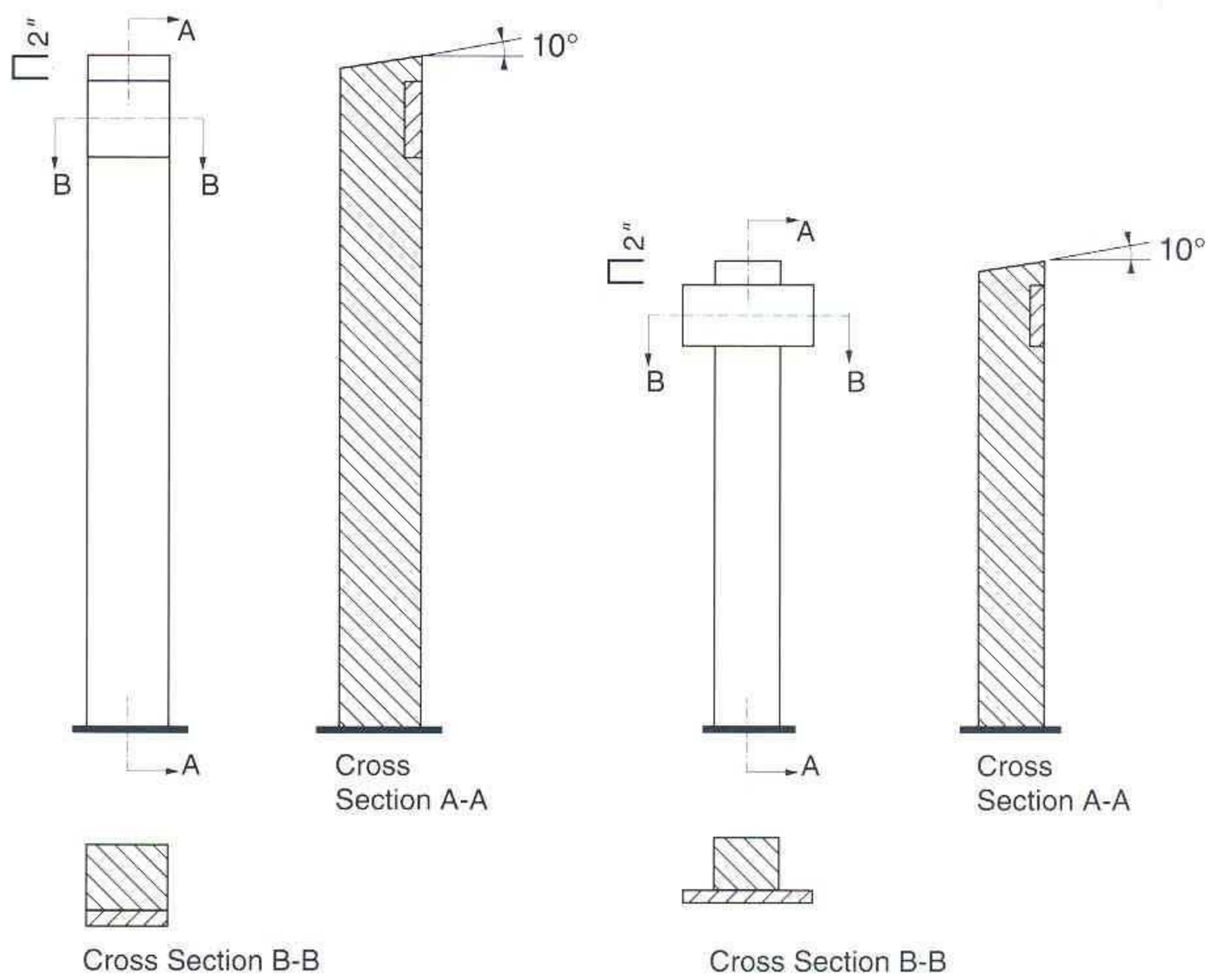

All items listed below shall conform to material specifications as described on pages B.4 through B.4b for HDO plywood signs unless otherwise instructed on this page.

1a Face panel and bottom strip, .5" thick HDO plywood to be thoroughly glue laminated to .75" HDO plywood back panel prior to finishing.

1b Back panel, .75" thick. Front face of back panel receiving insertion panels shall be painted as described on page B.4a.

2 Insertion panels, .5" thick HDO plywood. To be attached with No.12 flat head wood screws. Each insertion panel shall be finished as an individual sign panel.

3 Solid 4" x 4" ~~redwood~~ lumber post. Post size shown here reflects the HAGL and does not include the section under ground. For footing see pages B.2a and B.2b.

4a-b Panel attachment hardware. For assembly see detail 5, page B.7-2. Hardware on top of the panel (T-nut) shall be inserted in back panel prior to application of face material. Vertically center the T-nuts on post. Horizontally place T-nuts on panel, (1) down from the top edge and (1) up from the bottom edge as listed below.

2" for panel with A=1"
3" for panel with A=2"
4" for panel with A=3"

5 Insertion panel hardware, No.12 flat head wood screws placed 1.75" inboard from side edges of strips. Place two screws on each end of each insert strip one (1) down from the top edge and one (1) up from the bottom edge as listed below.

0.5" for strip with A=1"
0.75" for panel with A=2"
1" for panel with A=3"

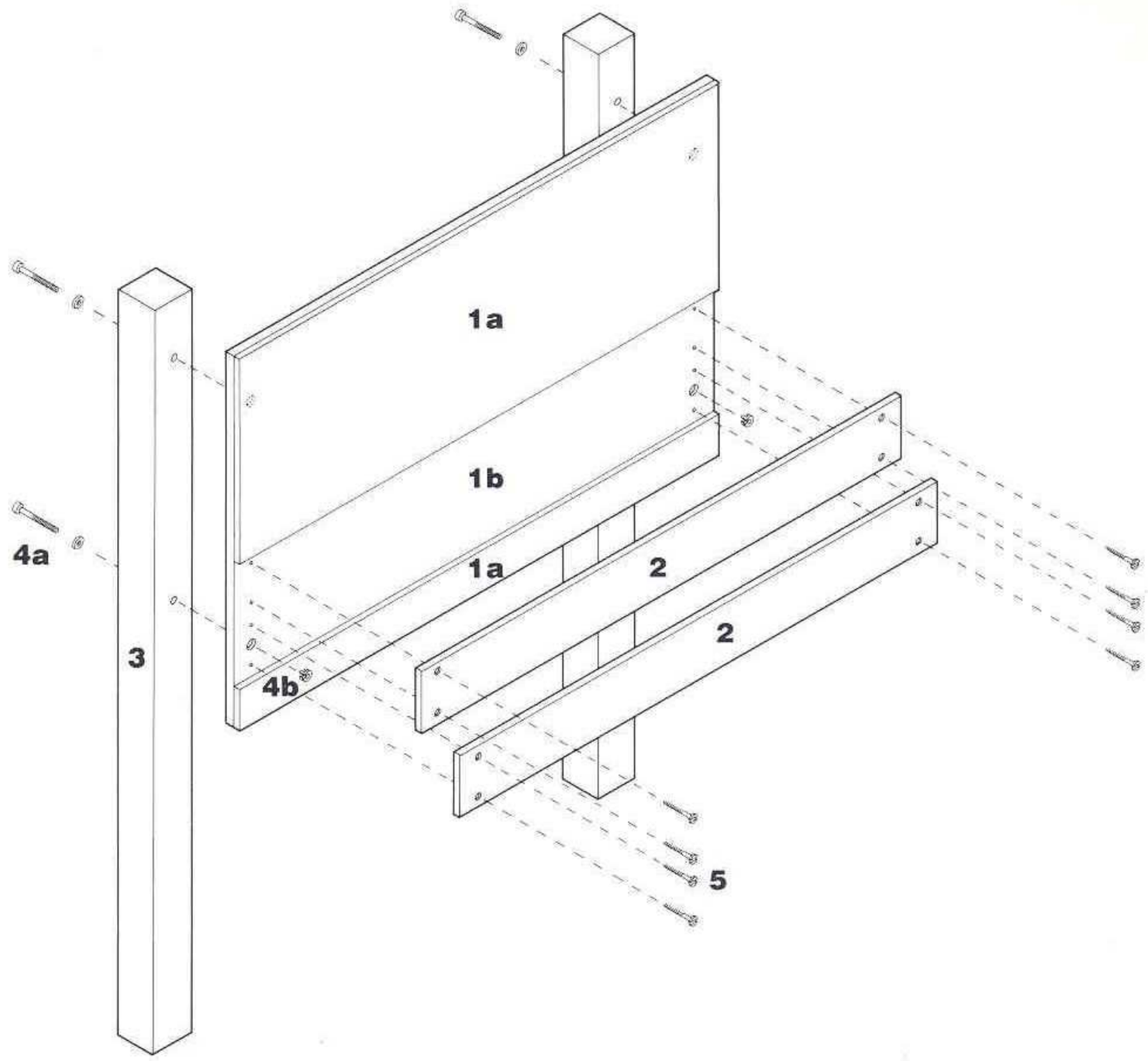

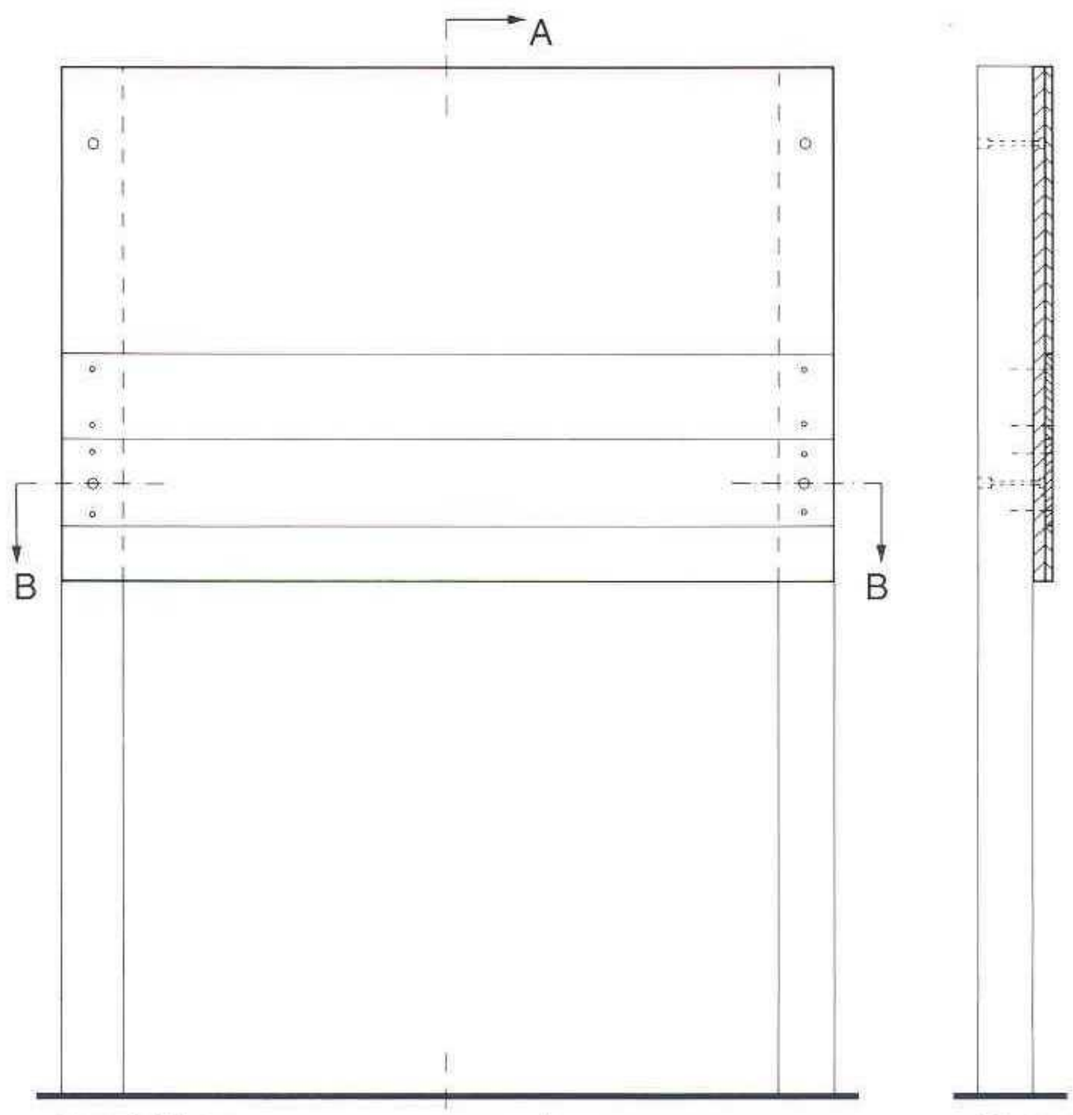

Front View

Cross Section A-A

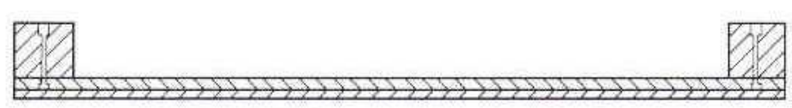

Cross Section B-B

All items listed below shall conform to material specifications as described on pages B.4 through B.4b for HDO plywood signs unless otherwise instructed on this page.

1 Panel, .75" HDO plywood. Panels shall be attached to brace, leaving 0.5" reveal between panel and post.

2 Brace, 2.5" x 3.5" redwood lumber. Length of brace to be sized according to the number of panels to be attached, including a 0.5" space between each panel as stacked vertically.

3 Solid 4" x 4" redwood post. Post size shown here reflects the HAGL and does not include the section under ground. For footing see pages B.2a and B.2b.

4 Brace attachment hardware shall be 0.375" x 5" lag bolts and 0.375" washers. Two or three slats shall use two (2) lag bolts per brace, four slat panels must use three (3) lag bolts per brace.

5a-c Panel attachment hardware For assembly see detail 5, page B.7-2. Hardware on slat (T-nut) shall be inserted in panel prior to application of face material. Vertically center the T-nuts on brace. Horizontally place T-nuts on panel, one (1) down from the top edge and one (1) up from the bottom edge as listed below.

2" for panel with A=3"
3" for panel with A=4"

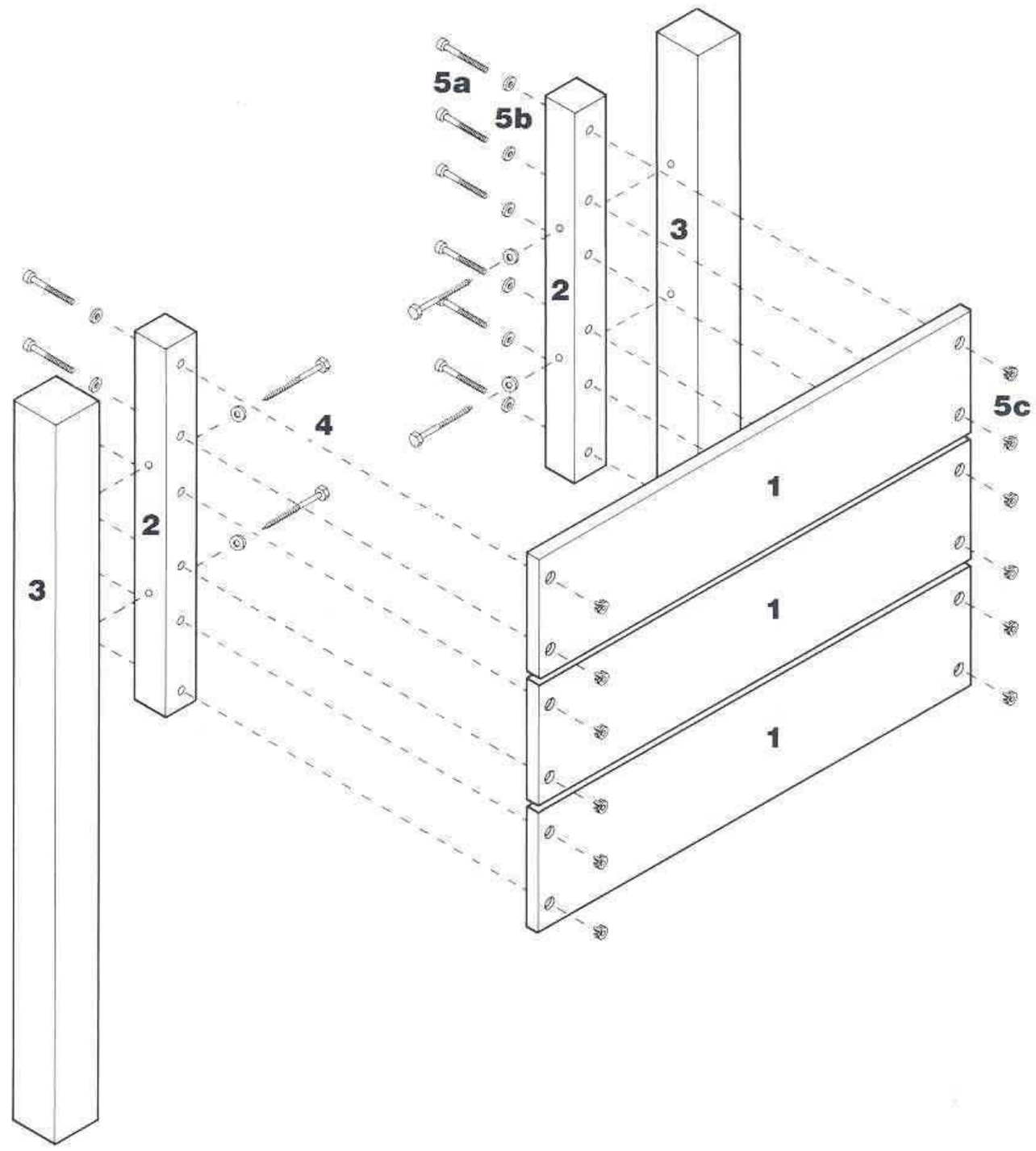

Exploded View

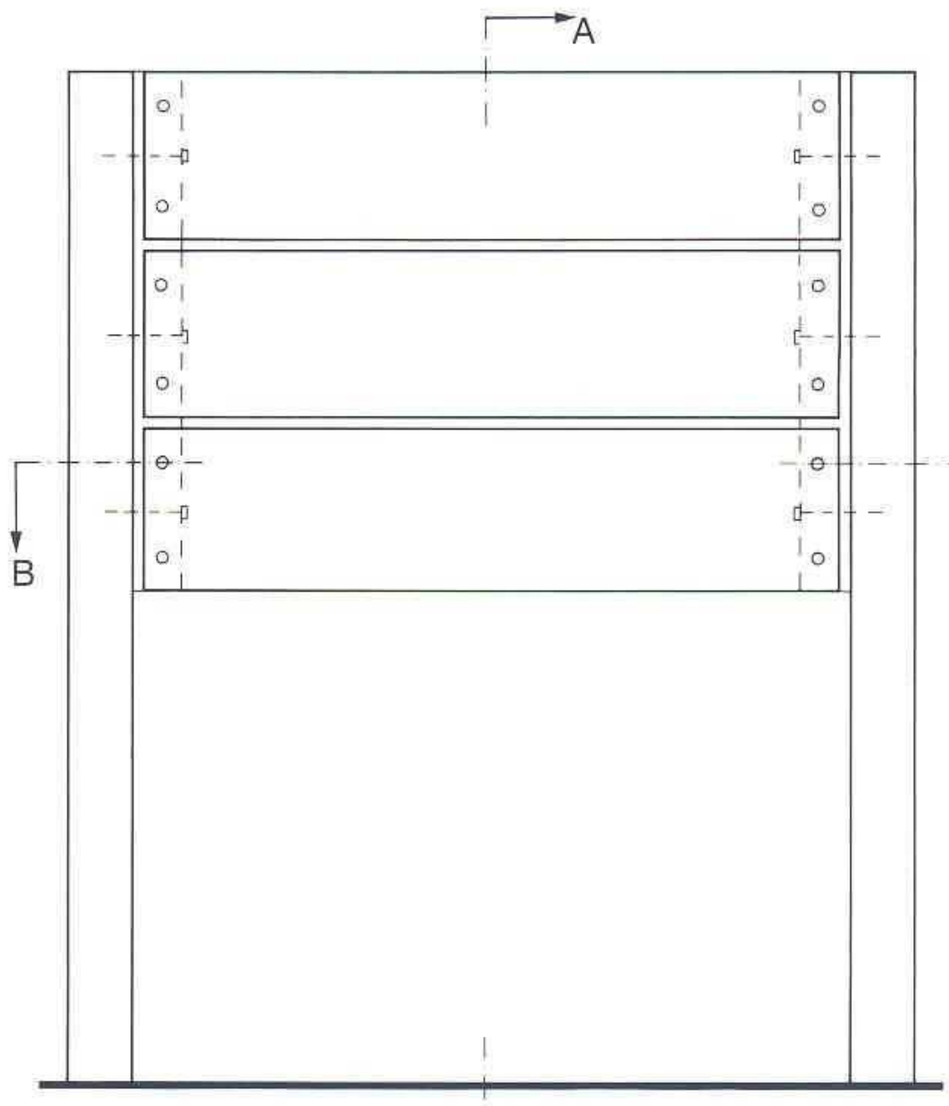

Front View

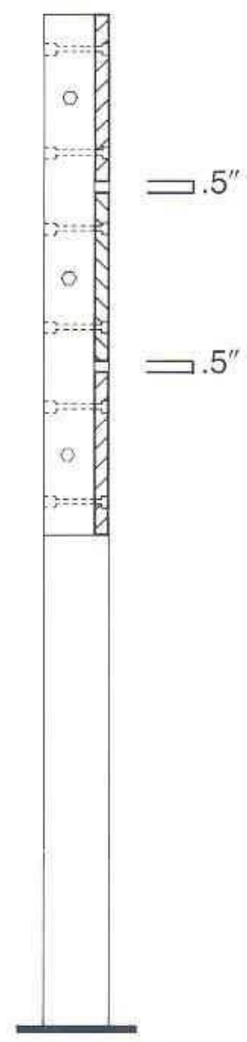

Cross Section A-A

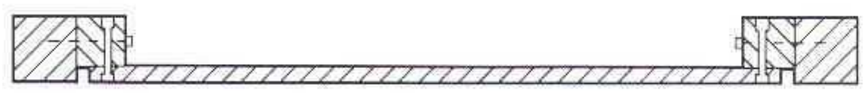
Cross Section B-B

1. Materials

1.1 Signs

Panels shall be fabricated from Aluminum 6061-T6 alloy as per ASTM B209, to meet or exceed standards as specified in FP-85 Section 719.03. Surface of panel shall be commercially flat and free of buckles, warps, dents, cockles, burrs and any fabrication defects. Panel thickness shall depend on total square footage of surface and maximum dimension.

Square Inch	Maximum Dimension	Panel Thickness
< 900	< 30″	0.080″
< 900	> 30″	0.125″
> 900	< 30″	0.125″
> 900	> 30″	0.125″

Dimensions for panels shall have a tolerance of ±0.125″.

No cleats or joints shall be permitted for panels up to 900 square inches with no dimension greater than 30″. All other panels shall require reinforcement using a metal framework.

Panels shall have corners with a safety radius of 1″ unless otherwise specified.

Metal cross brace (Z-bars) shall be fabricated from aluminum 6061-T6 Z-bar, 2.687" x 3" x 2.687". For large panels, standards are provided on page B.2c, and on each sign specification pages for ALU signs.

Solid posts shall be fabricated of one piece construction heart redwood lumber per grading rules of the California Redwood Association, or better. For nominal dimensions larger than 4″ x 4″, treated Douglas fir No.1 grade or better; or treated southern yellow pine No.1 or better may be used. Material shall be well seasoned and free of any defects.

All post sizes may be no more than 0.5″ less than nominal dimensions, and will be sanded prior to finishing.

Douglas fir and southern yellow pine shall be weathered a minimum of one (1) year after installation prior to stain application.

Glue laminated posts can be used as an alternate and shall be constructed of clear heart, kiln dried redwood only.

All completed sign panel and post assemblies must be pre-drilled and assembled in the shop prior to shipment to check alignment and ensure proper fit once installed. Panels manufactured as separate units shall be pre-drilled with T-nuts and Z-bar braces attached to panel when manufactured.

1.2 Hardware

Panel hardware shall be 0.375″ socket head cap bolts, 0.375″ washers and plastic or metal capped nuts. Cap bolts to be countersunk a minimum of 0.25″ below the surface of the post.

Metal brace attachment (Z-bar) shall be rivets, specified on fabrication drawing.

1.3 Laminates

Adhesive for post construction shall be phenolic resornicol moisture resistant, or approved equal. Application must be performed within 15 minutes between the first glue application and the final setting of the clamps. The surface of each joint face shall be completely covered with adhesive. Glued posts to cure for a minimum of 24 hours with clamps in place.

Air temperature shall be between 70°-90° F during drying of boards, glue application and curing process. Boards to be stacked on drying racks and dried not less than 24 hours prior to gluing.

Moisture contents of lumber to be glued shall be between 12-15%, with a 3% margin between wettest and driest piece.

Surface joints shall be smooth and true, free from machine joining marks and chipped or loosened grain.

1.4 Finishes

Stain shall be semi-transparent waterproof, anti-bacterial redwood stain to match Corps Brown, Olympic brand Redwood stain No. 715, or approved equal. Apply with brush or roller to all exposed surfaces of sign panel and posts. Stain shall be thoroughly mixed prior to and during application to ensure even pigmentation. Posts will be dried a minimum of 24 hours prior to shipping. Douglas fir and southern yellow pine shall be weathered a minimum of one (1) year after installation prior to stain application.

Paint room facilities shall be well ventilated, dust-free and enclosed. Air temperature shall not be less than 65 degrees F during application of paint.

Sign back faces, metal frames and attachment hardware shall be painted Corps Brown using acrylic-polyurethane enamel with specified paint preparation and primers.

2.1 Retro-reflective sheeting

2. Graphics

Background and legend shall be engineer grade, premium quality, wide angularity enclosed lens retro-reflective material to meet or exceed the standards of:

– General Services Administration, Federal Supply Service specification *L-S-300-C, Reflectivity 1.*

– U.S. Department of Transportation, Federal Highway Administration, *Standard Specifications for Construction of Roads and Bridges on Federal Highway Projects*, current edition FP-85 Sections 633.06 and 718.01.

Background and legend shall use sheeting from the same manufacturer. Mixing of sheeting from different manufacturers shall not be permitted.

No more than twelve (12) months will have elapsed from date of purchase to the date of application.

Background application to aluminum shall be as described by the manufacturer and approved by the designated representative of the Corps of Engineers. Corps Brown and all highway colors may be either pressure-sensitive or heat-activated applied. Special waterway colors are only available with pressure-sensitive adhesive.

Panels shall be covered with one unspliced sheet, unless the dimension is larger than 48″ in vertical direction. Splices shall be positioned so as not to fall within legends. Top piece shall overlap bottom piece by a minimum of 0.5″, but not more than 0.75″. Spliced sheets shall be color matched.

Background shall be adhered to front of sign panel prior to legend applications.

Legend application shall be as described by the manufacturer and approved by the designated representative of the Corps of Engineers and may be either pressure-sensitive or heat-activated applied. No loose or curled edges, bubbles or blisters shall be permitted.

Legend shall be adhered to background after application of background sheeting to sign panel.

Heat-activated sheeting shall be double cycled through the vacuum applicator, one time when applying the background sheeting and one time when applying the legend.

2.2 Silkscreen

Screen printing may be used to make signs that are not Corps Brown assuming that the color stability, retro-reflective qualities and overall durability are equal. The decision to use screen printing versus computer cut and applied legends should be based on which method is most cost effective for the number of signs required. If lemon yellow Warning or Caution signs with cut vinyl black legends are being vandalized, then they should be manufactured with black screen-printed legends.

Formulation cards shall be filed for each individual ink color to ensure consistency of the product. Filed information shall include, but is not limited to, ink formula with designated color code, thinner and retarder adjustments in grammes, batch numbers of inks, thinner and retarder, mesh tension, emulsion coating and exposure units/time. When semi or fully automatic equipment is used, additional information shall be filed for: off contact, peel, speed, squeegee, flood speed, curing temperature and belt speed.

Inks shall have a light fastness rating of 7-8 on the DIN 16525 (Wool Scale) or equivalent industry standard, and must be able to withstand 375 degrees Fahrenheit (190 degrees Celsius) without noticeable change off pigmentation.

Ink type shall be acceptable to manufacturer of substrate.

Inks shall be formulated using a computer colorimetry system and shall be matched with a tolerance of ±0.1 grammes.

Colors shall conform to the listing in Section 4 in this manual.

Thinner and retarder used in the adjustment of the inks shall be specified by the ink manufacturer. Additions shall be made by weight with a tolerance of ±0.1 grammes and filed on the formulation card.

Screens shall be 254 polyester monofilament, mesh tensioned to no less than 18 newtons. Mesh tension, emulsion coating and exposure units/time are to be established and filed on the formulation card.

Printing shall be performed on semi or fully automatic equipment with a repeatability tolerance of ±.004″ in conjunction with a forced air conveyor drier. Off contact, peel, speed, squeegee, flood speed, curing temperature and belt speed are to be established and filed on the formulation card.

A fiberglass laminated urethane squeegee set at a 75° angle is to be used.

All items listed below shall conform to material specifications as described on page B.5 through B.5a for aluminum signs, unless otherwise instructed on this page.

1 Panel, 0.190 aluminum backed with "Z" bars for stiffness.

1a "Z" bar.

2 Frame, 2" x 4" or 4" x 4" lumber. Length of frame to be sized 2" longer than panel to create a 1" reveal on either side.

3 Solid or glue laminated post, 4" x 6", 6" x 8", 9" x 8", or 12" x 12". The dimension parallel to the sign face shall be equal to the Capital Letter Height (A). Post size shown here reflects the HAGL and does not include the section under ground. For footing see page B.2a-b.

4 Frame assembly hardware. For attachment see detail 2, page B.7-1.

5 Panel attachment hardware. For attachment see detail 9, page B.7-3.

NOTE: Intermediate support member(s) will vary with the size of panel and are not representative as shown. For fabrication of frame, refer to the section on wood sign frames for HDO signs, page B.4.

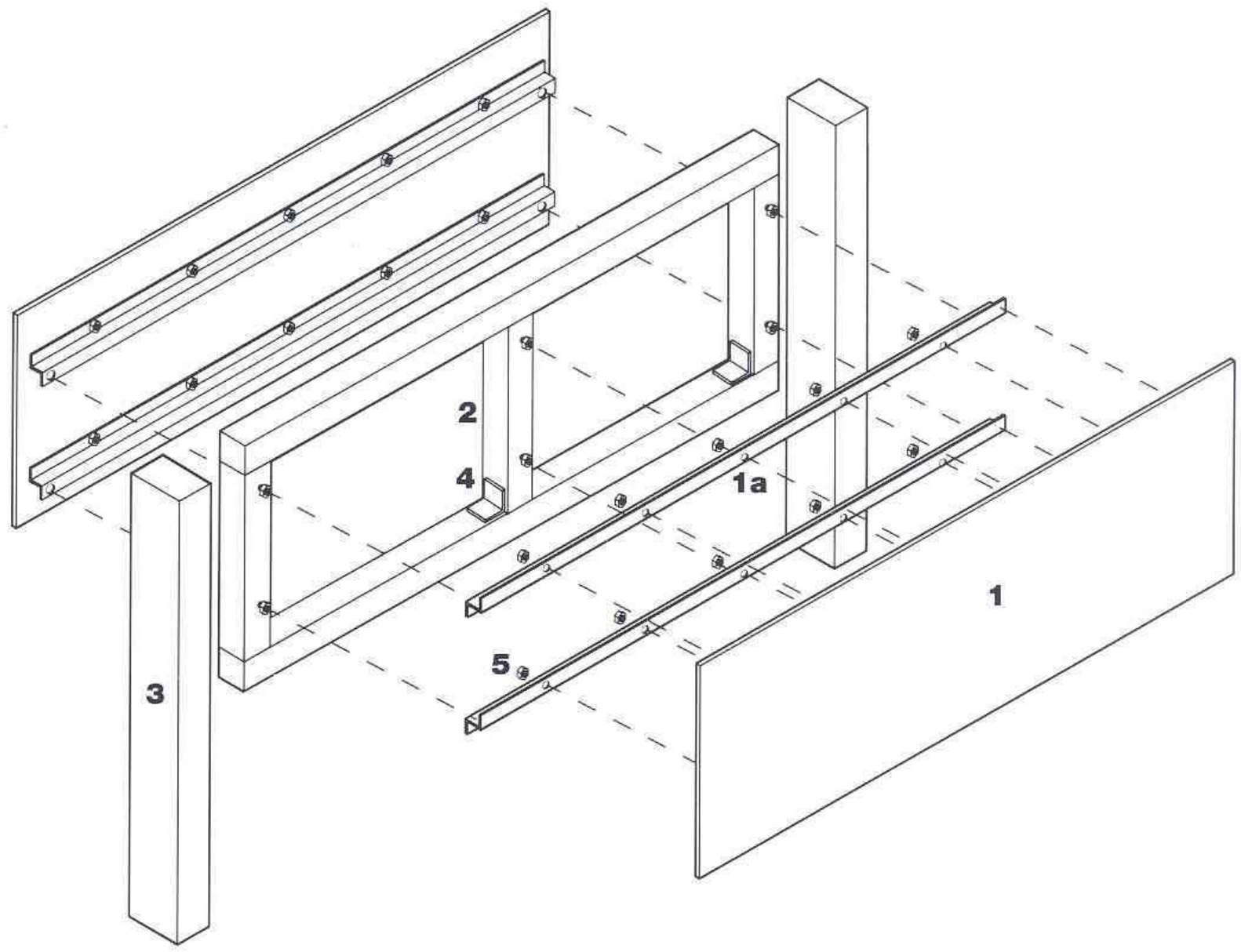

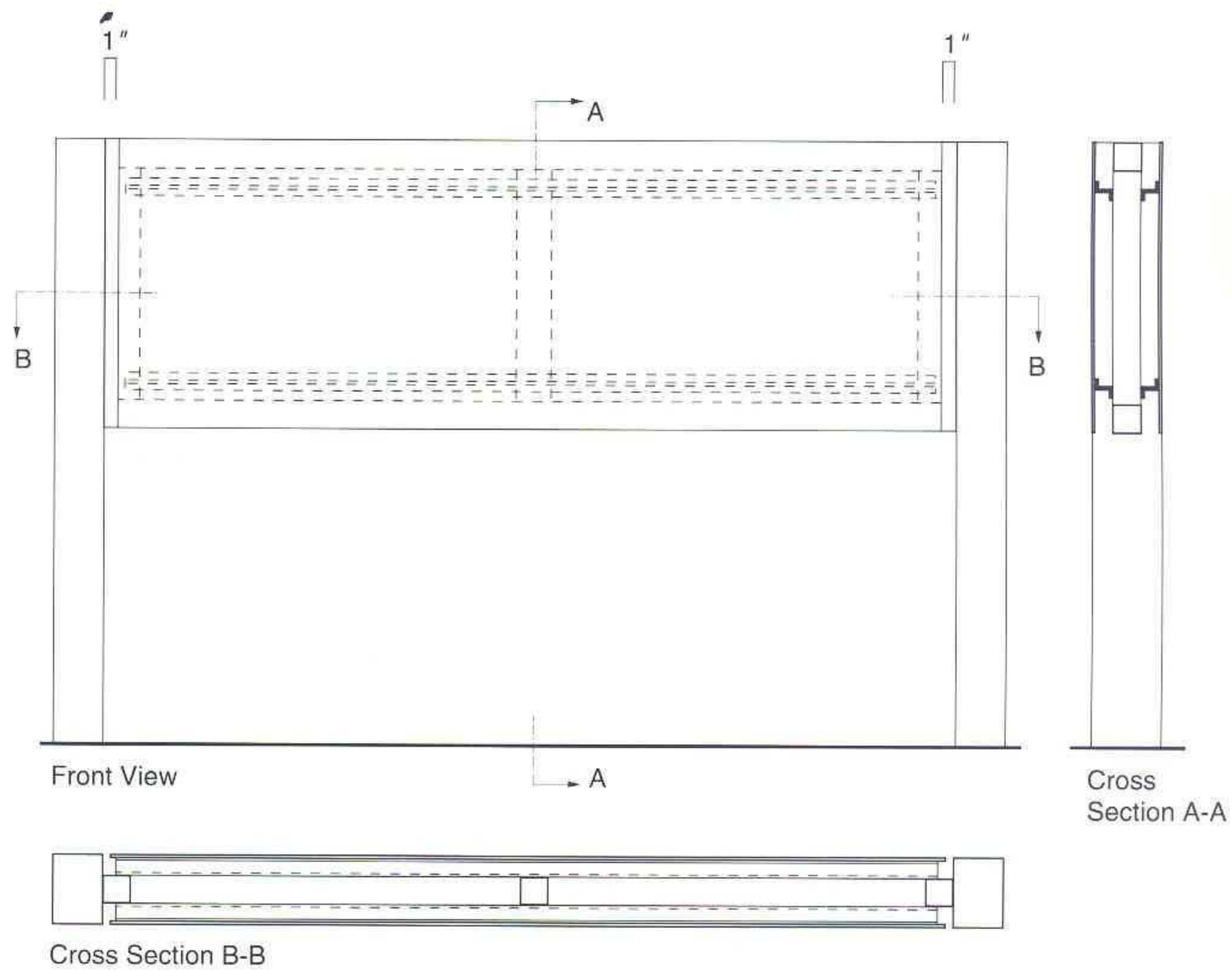

All items listed below shall conform to material specifications as described on page B.5 through B.5a for aluminum signs, unless otherwise instructed on this page.

1 Panel, 0.190 aluminum backed with "Z" bars for stiffness

1a "Z" bar

2 Frame, 2" x 4" or 4" x 4" lumber. Length of frame to be sized 2" longer than panel to create a 1" reveal on either side.

3 Solid or glue laminated post, 4" x 6", 6" x 6". The dimension parallel to the sign face shall be equal to the Capital Letter Height (A). Post size shown here reflects the HAGL and does not include the section under ground. For footing see page B.2a-b.

4 Frame assembly hardware. For attachment see detail 2, page B.7-1.

5 Panel attachment hardware. For attachment see detail 9, page B.7-3.

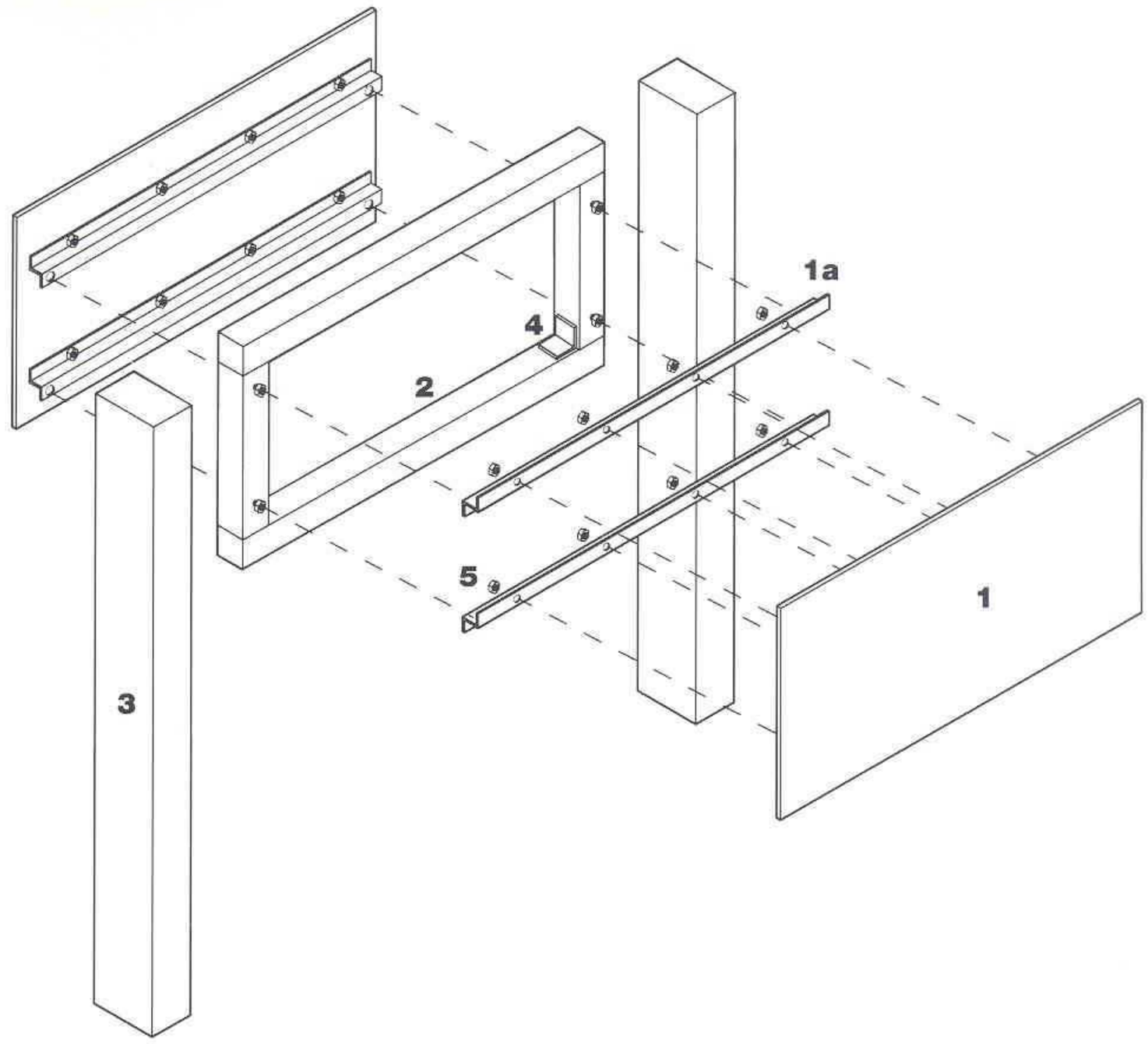

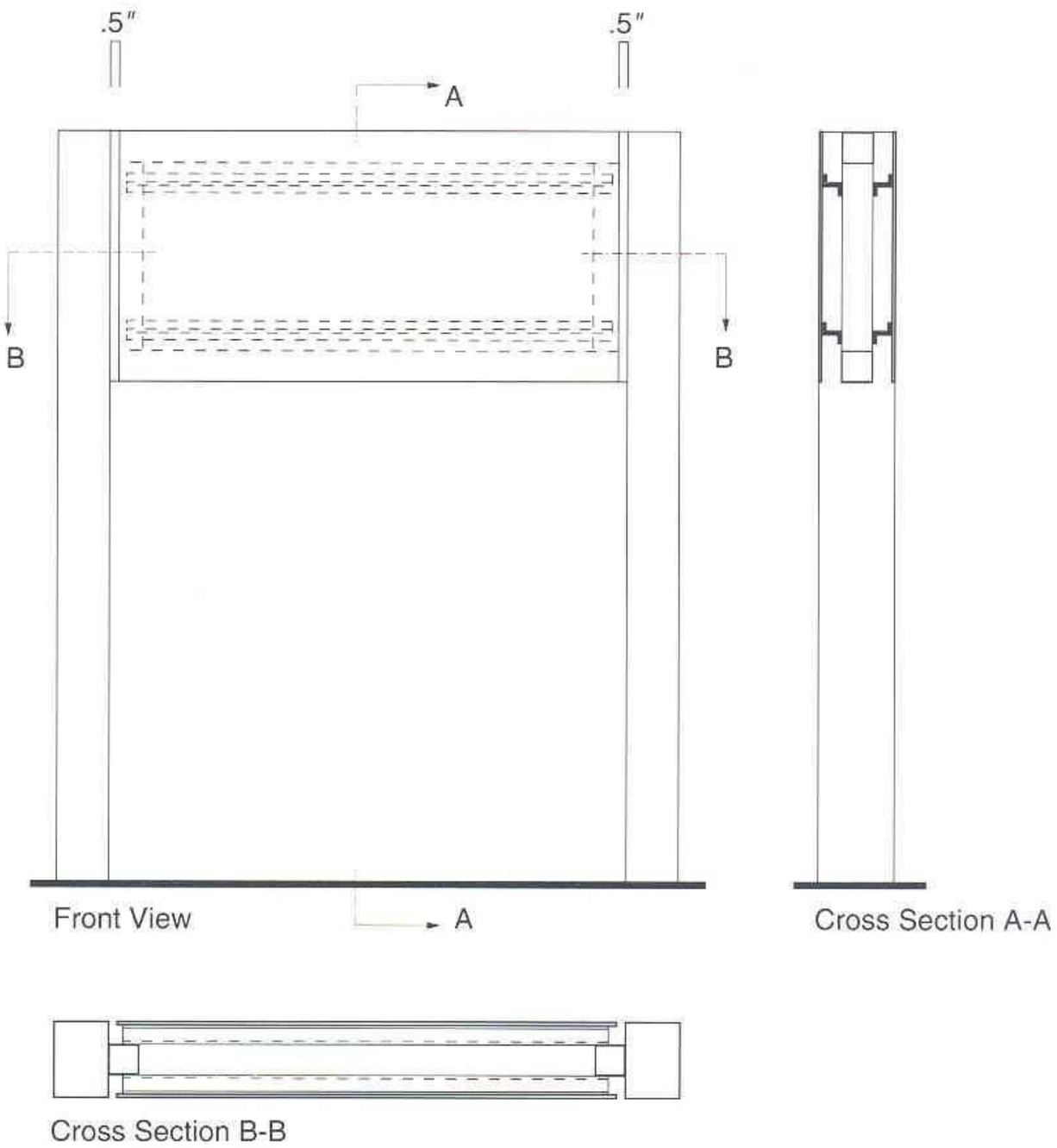

All items listed below shall conform to material specifications as described on page B.5 through B.5a for aluminum signs, unless otherwise instructed on this page.

1 Panel, 0.190 aluminum backed with "Z" bars for stiffness.

2 Solid or glue laminated post, 4" x 4", 4" x 6", 6" x 6", or 6" x 8". Post size shown here reflects the HAGL and does not include the section under ground. For footing see page B.2a-b. An additional third post shall be positioned equally between the two other posts.

3 "Z" bar, see table on page B.5-4a for correct number of "Z" bars.

4a "Z" bar attachment hardware. For attachment see detail 9, page B.7-3.

4b Panel attachment hardware. For attachment see detail 9, page B.7-3.

NOTE: Sign construction and panel attachment varies with panel size. For correct placement see following page B.2c.

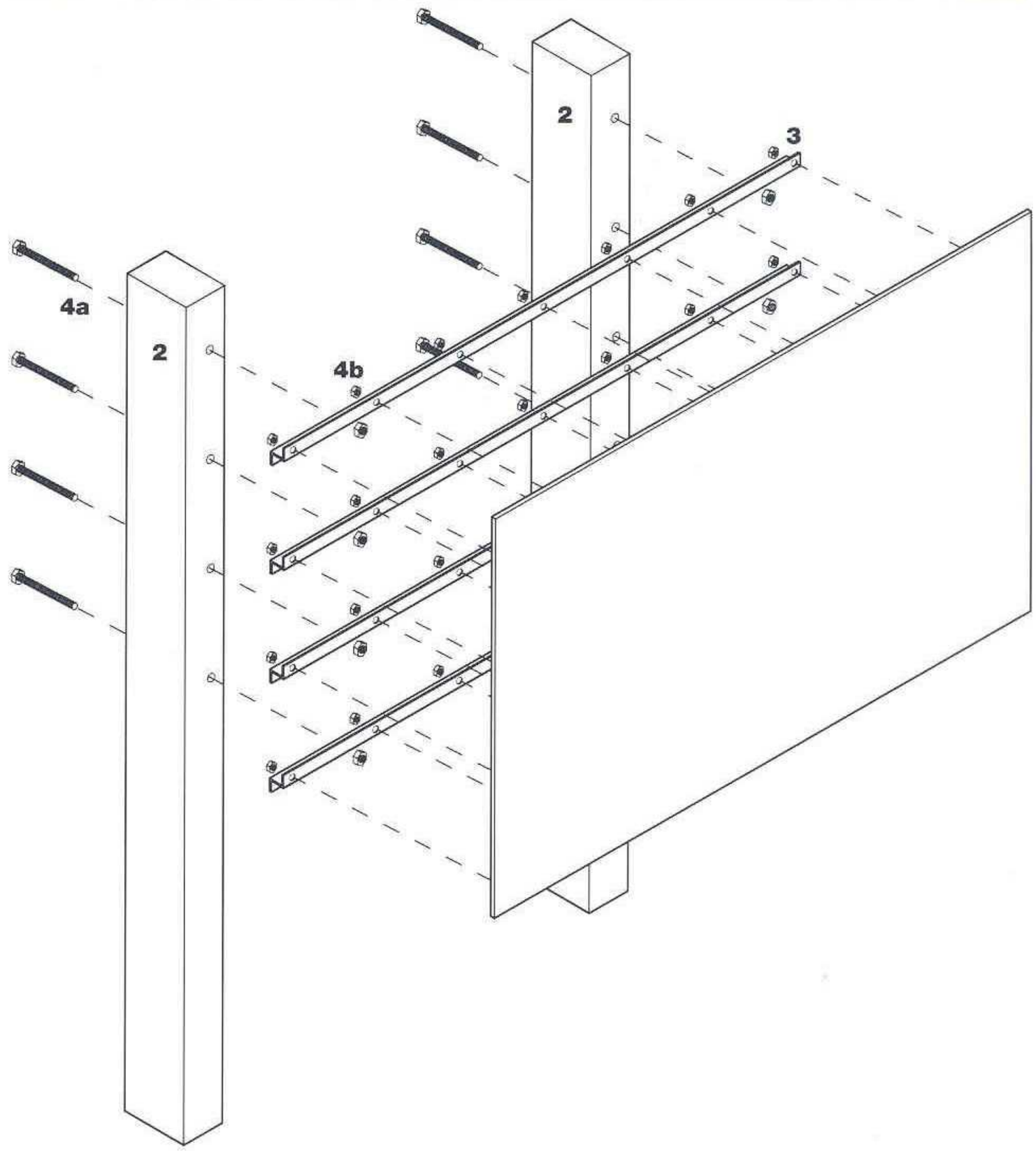

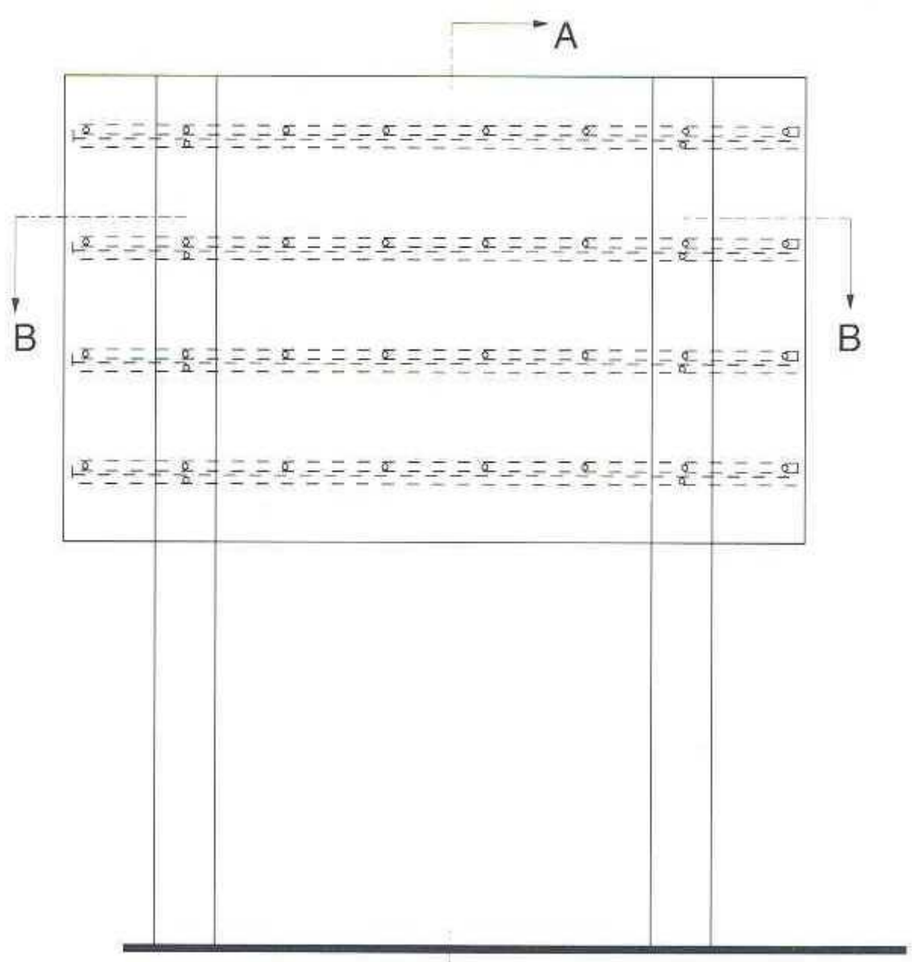

Front View

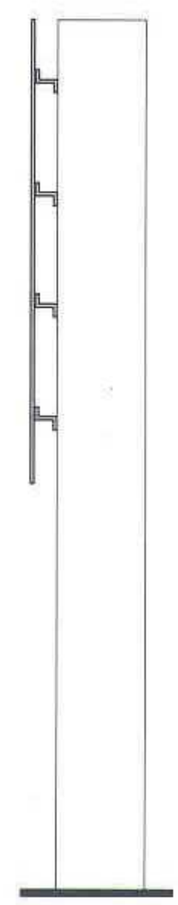

Cross Section A-A

Cross Section B-B

All items listed below shall conform to material specifications as described on page B.5-5a for aluminum signs, unless otherwise instructed on this page.

1 Panel, .080″ or .125″ thick. Panels using a sign type code "PS" shall have corners with a radius matching the outside borderline provided on the artwork (see page 8.31). All other sign types shall have the specified safety radius.

2 Solid or glue laminated post, 4″ x 4″ or 4″ x 6″. Post size shown here reflects the HAGL and does not include the dimension under ground necessary to install the sign.

3a-c Panel attachment hardware. For attachment see detail 5, page B.7-2.

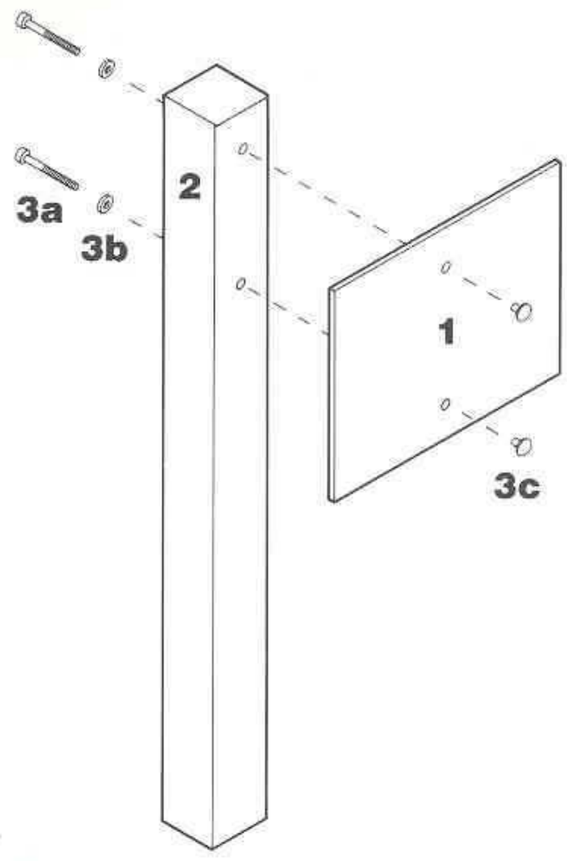

Exploded View

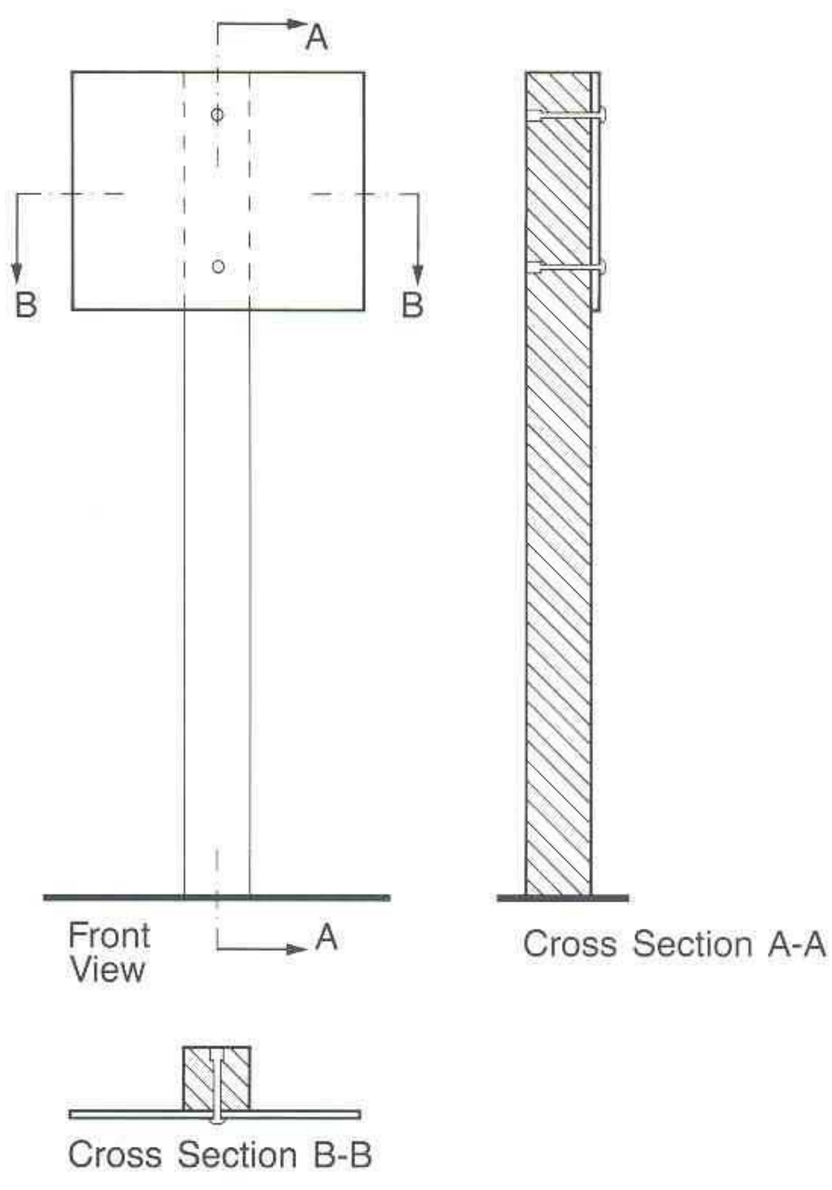

Front View

Cross Section A-A

Cross Section B-B

All items listed below shall conform to material specifications as described on page B.5-5a for aluminum signs, unless otherwise instructed on this page.

1 Panel, .080" or .125" thick.

2a Panels no greater than 24" x 36" may be attached to wall surface with silicone adhesive if surface allows good adhesion. Wall surface shall be clean and free of loose particles to promote good adhesion of silicone. Use foam tape or temporary bracing until permanent adhesives are set.

2b Panels larger that 24" x 36" shall be attached to wall surface with .25" threaded stud protruding 1" from back of sign and small panels where stud mounting provides added resistance to removal. Studs shall be permanently affixed square to the face of the panel at intervals no greater than 18" between the studs. Minimum dimension to the edge of the panel shall be 2". Silicone adhesive shall be used in wall holes receiving the threaded studs, and in generous amounts on the remainder of the sign back. Excess adhesive shall be scraped off sign edge and wall surface for tailored looking attachment.

2c If wall surface is not even enough to use either of the two methods mentioned above, a wood frame, made from 1" x 4" redwood, may be constructed to receive the aluminum panel using .25" threaded studs protruding 1.5" from back of sign, to secure the panel to the wall or surface.

3 An optional beveled receiving cleat may be used to assure that the panel is attached on level and carry panel weight until adhesives are set.

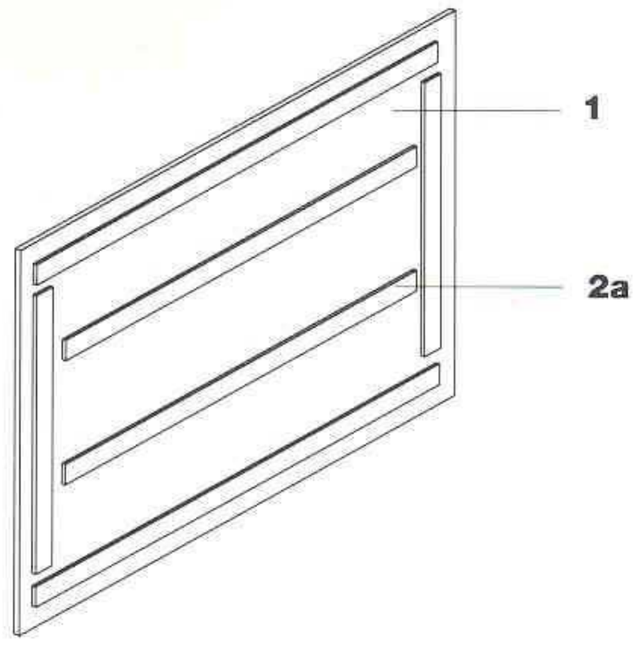

Side View

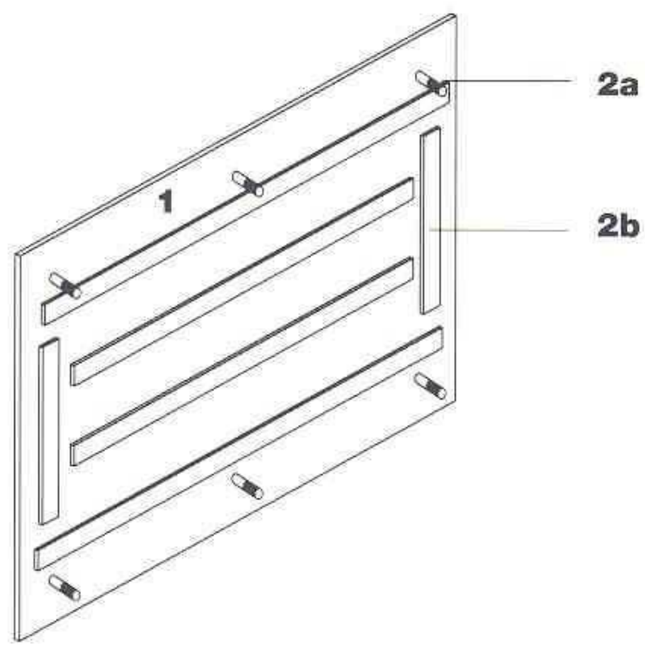

Side View

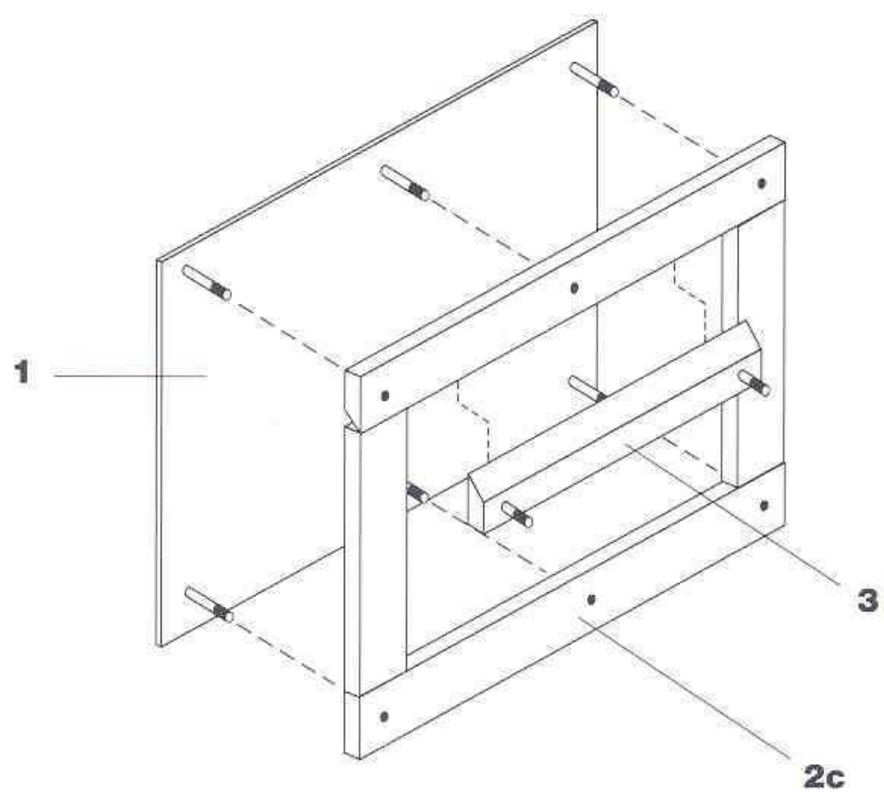

Side View

1.0 Application

Screen printing applications are appropriate for traffic signs, parking/no parking, industrial safety signs, and boundary markers that are generally produced in large enough quantities to make screened production cost effective. Also, the ink systems are well developed and if printed to specifications, will last almost as long as standard factory die cut materials if appropriately prepared using quality screen printing procedures and materials. *Note:* No screen printing ink has been developed to match the Corps Brown sheeting color that will meet the standards of durability, reflectivity, and color consistency. Generally, few Corps Brown signs are made in quantities to justify screen production.

1.1 Signs

Polyethylene shall be modified high density linear polyethylene with a density of 0.965 gram/cc. Ultraviolet inhibitor shall be added with a V.V.I./Polyethylene ratio no less than 1% by weight added at time of extrusion. Temperature range shall be -180 to 200 degrees Fahrenheit.

Retro-reflective sheeting shall be engineer grade, premium quality, wide angularity enclosed lens retro-reflective material to meet or exceed the standards of: GSA *L-S-300-C, Reflectivity 1, or* FHWA *Standard Specifications FP-85 Sections 633.06* and *718.01*.

Non-reflective vinyl for applied computer or die-cut graphics shall be opaque pressure sensitive 2 mil high performance type with an outdoor life of 5-7 years and applied to painted or screen printed surface.

Solid posts shall be fabricated of one piece construction heart redwood lumber per grading rules of the California Redwood Association, or better. Glue laminated posts can be used as an alternate and shall be constructed of clear heart, kiln dried redwood only.

For treated lumber posts use Douglas fir No.1 grade or better; or treated southern yellow pine No.1 or better. Material shall be well seasoned and free of any defects.

All complete sign panel and post assemblies must be pre-drilled with appropriate hardware when manufactured, and assembled in the shop prior to shipment.

1.2 Finish

Stain for sign posts shall be semi-transparent waterproof, anti-bacterial redwood stain to match Corps Brown, Olympic brand redwood stain No.715, or approved equal. Douglas fir and southern yellow pine shall be weathered a minimum of one (1) year after installation prior to application of stain.

2.1 Silkscreen

Screen printing is allowed for signs reproduced in large quantities using ink systems that are developed for the material on which it is being placed.

Opaque inks shall be non-glare, semi-gloss finish, and shall be compatible to substrate. For non-reflective films, use an opaque ink system and polyethylene panels use alkyd or epoxy inks per manufacturers instructions.

Translucent inks for retro-reflective sheeting shall use fade-resistant using dark color on white base material so that the reflective qualities of the reflective sheeting are as little as possible.

Retro-reflective background inks may be screen printed on polyethlene as a base coating for applied graphics. Ink is alkyd base and requires no primer if applied to manufacturers guidelines. Apply one even coat using 200 mesh screen.

Painted sign background to be semi-gloss alkyd or acrylic polyurethane enamel with properly cleaned and prepared surface, with primers specified for use with finish coat. Surface to have two sprayed finish coats of enamel and be free of any dust marks, paint runs, uneven surface modeling or other surface imperfections.

Silkscreen masks shall be produced using same size photographic film positives, or computer cut graphics that match the design standards exactly. Hand-cut or projection-produced screens shall not be permitted.

Quality of screen printing shall precisely match the artwork, with even coating across printed area and no uneven or modeled reproduction of graphic images.

Colors shall be reproduced exactly as specified in Section 4 of the Sign Standards Manual. All color matches shall be approved by the National Sign Program Manager prior to fabrication.

Graphic application with sign materials and ambient air temperature to be no lower than 60°F, and shall be factory applied (not field applied or applied by a re-seller or subcontractor) to the panel following proper preparation of surface as prescribed by manufacturer.

All items listed below shall conform to material specifications as described on page B.6 for screen printed signs, on pages B.4b and B.5a for HDO and ALU signs respectively and in related mounting details shown on pages B.7-1 through B.7-5.

1 HDO plywood panel with screen printed and applied sign face (reflective sheeting or non-reflective adhesive vinyl). Rules and regulations panel to be wall mounted using key hole or other appropriate mounting to conceal attachment.

2 Heavy gage polyethylene with graphics screen printed directly to surface of panel material.

2a Hardware shall be selected to securely mount panels while maintaining an finished looking, vandal resistant installation. Mounting to post or flat wall surface using screws or galvanized, flat head shingle nails as appropriate.

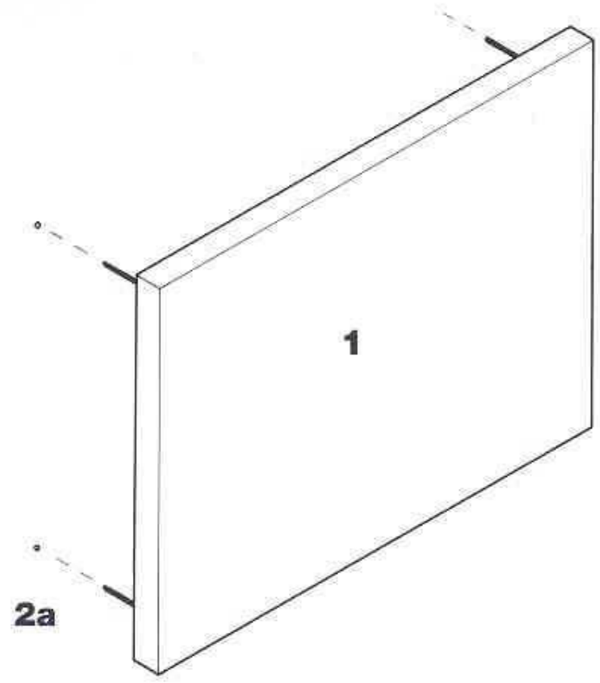

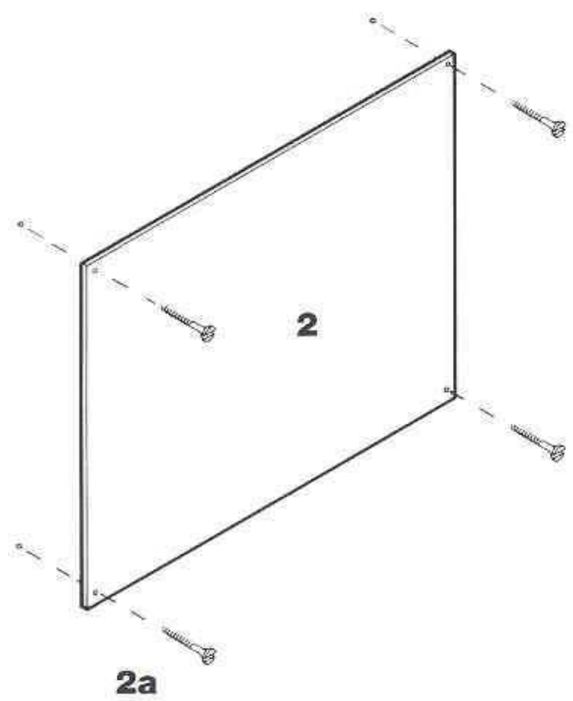

Exploded View

All items listed below shall conform to material specifications as described on page B.6 for screen-printed signs, unless otherwise instructed on this page.

1 Polyethylene panel, surface silkscreened and mounted on specified post or on existing structures and/or trees as specified by the local project manager.

2 Solid post, 4″ x 4″. Post size shown here reflects the HAGL and does not include the section under ground.

3 Hardware shall be appropriate to surface on which panel is mounted.

NOTE: Panels installed on existing structures or vegetation shall use a common height to create an orderly look.

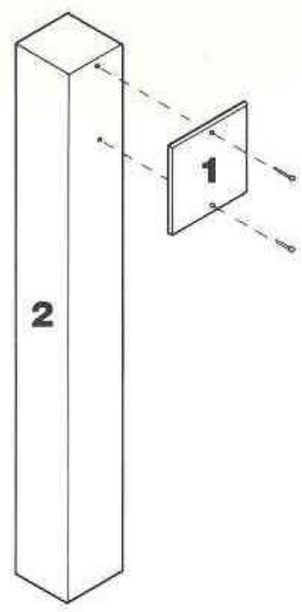

Exploded View

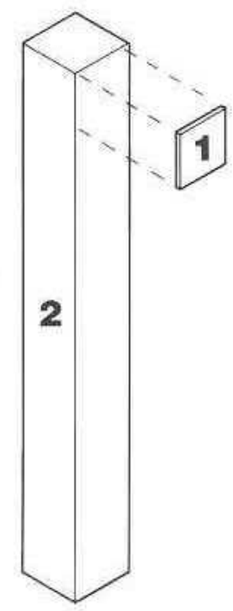

Exploded View

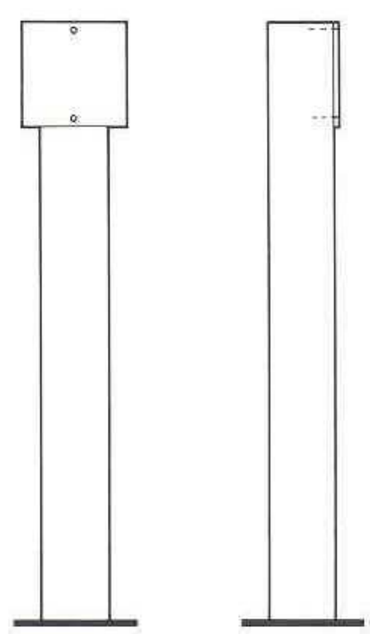

Front View Side View

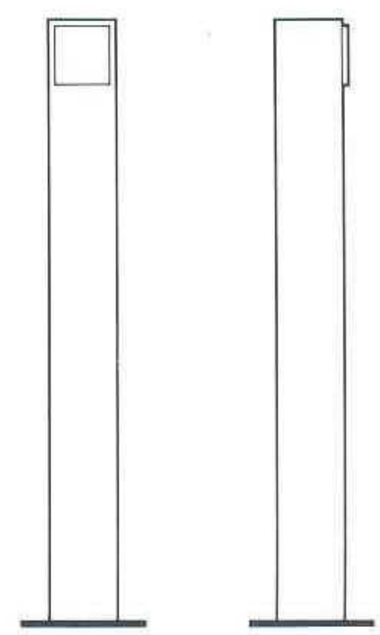

Front View Side View

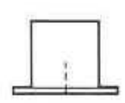

Plan

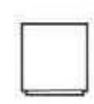

Plan

Site Availability Boards were developed in Nashville District (J. Percy Priest Lake) to assist campers when entrance stations are not staffed by park attendants. The Site Availability Boards allow the entrance to be unattended for several hours of the day by identifying occupied and vacant sites for incoming campers. This is especially important where reservations for campsites are taken and reserved sites would not readily be identifiable. Rangers can also use the boards to identify campers fees; the board can be changed to the "Occupied" position when the fees are collected. The Site Availability Board system allows reduced park attendant hours, provides campers with site information, and assists rangers in collecting fees.

The Site Availability Board is constructed of a solid plastic board placed on a datoed 6" x 6" wood post. The board has grooved sides, which allows an aluminum slide to be moved up and down to display either the "Available" or "Occupied" messages. The messages are cut and applied white, engineer-grade retro-reflective sheeting applied to retro-reflective sheeting base color; green for "Available" and red for "Occupied." The lock is an allen set screw, simple in design and easy to use. When attached to a treated 6" x 6" post, the Site Availability Board makes an attractive campsite identification system.

Side Elevation

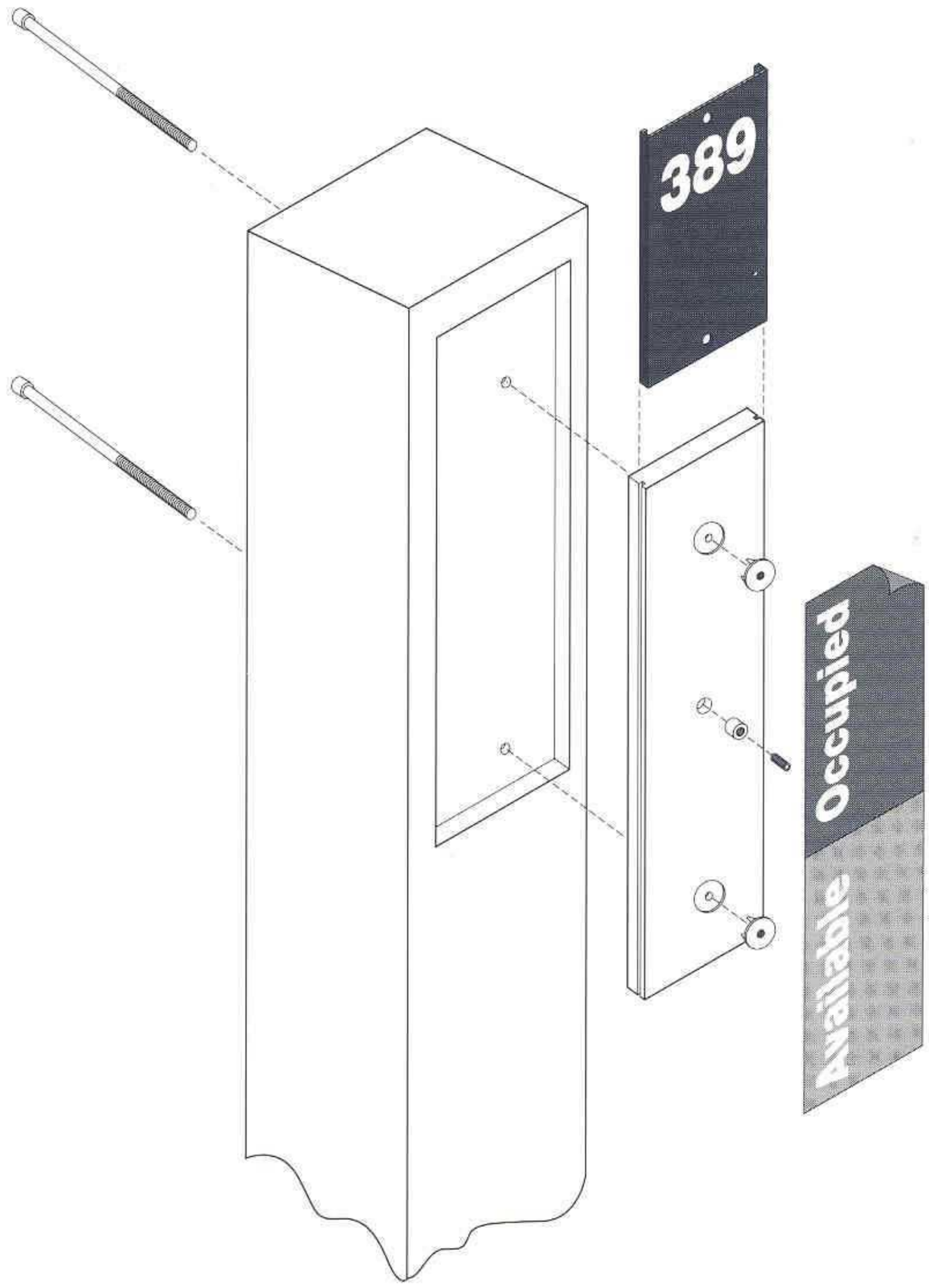

Exploded View

Site Availability Board Specifications

Post: Stained 6" x 6" dimensional post with beveled top (1:6), redwood or treated Douglas fir or treated Southern Yellow Pine with 0.5" x 15" datoed insert for attachment of panel.

Post Stain: Opaque (solid color) Corps Brown

Panel: Machined impact resistant plastic 4" x 15" x 0.5" with machined 0.09375" (w) x 0.15625" (d) slide groove inset 0.09375" and extending 15" on both outside edges.

Adjustable slide: Painted extruded aluminum, 4.125"(W) x 7.75"(L) x 0.625" (T) slide with 0.25" x 0.1875" double return.

Slide stop: 0.375" threaded insert in plastic panel with 0.05625"x 0.375" allen head set screw.

Slide finish: Acrylic polyurethane, color Corps Brown with Corp Brown reflective sheeting face.

Assembly attachment: Subsurface 0.187" T-nut with rear mount, counter sunk, 0.187" allen head bolts.

Graphics on panel: 2 sections 4" x 7.5" (4" x 15" total)
Color: Top section: Red (3M-3262) Engineering grade reflective sheeting, bottom section: Green (3M-3267) Engineering grade reflective sheeting.

Graphics: White (3M-3260) computer cut Engineering grade reflective sheeting.
Campsite number: 1.25" Helvetica Bold aligned as shown.
Availability information: 1.0" Helvetica Bold, upper and lower case, aligned on vertical as shown.

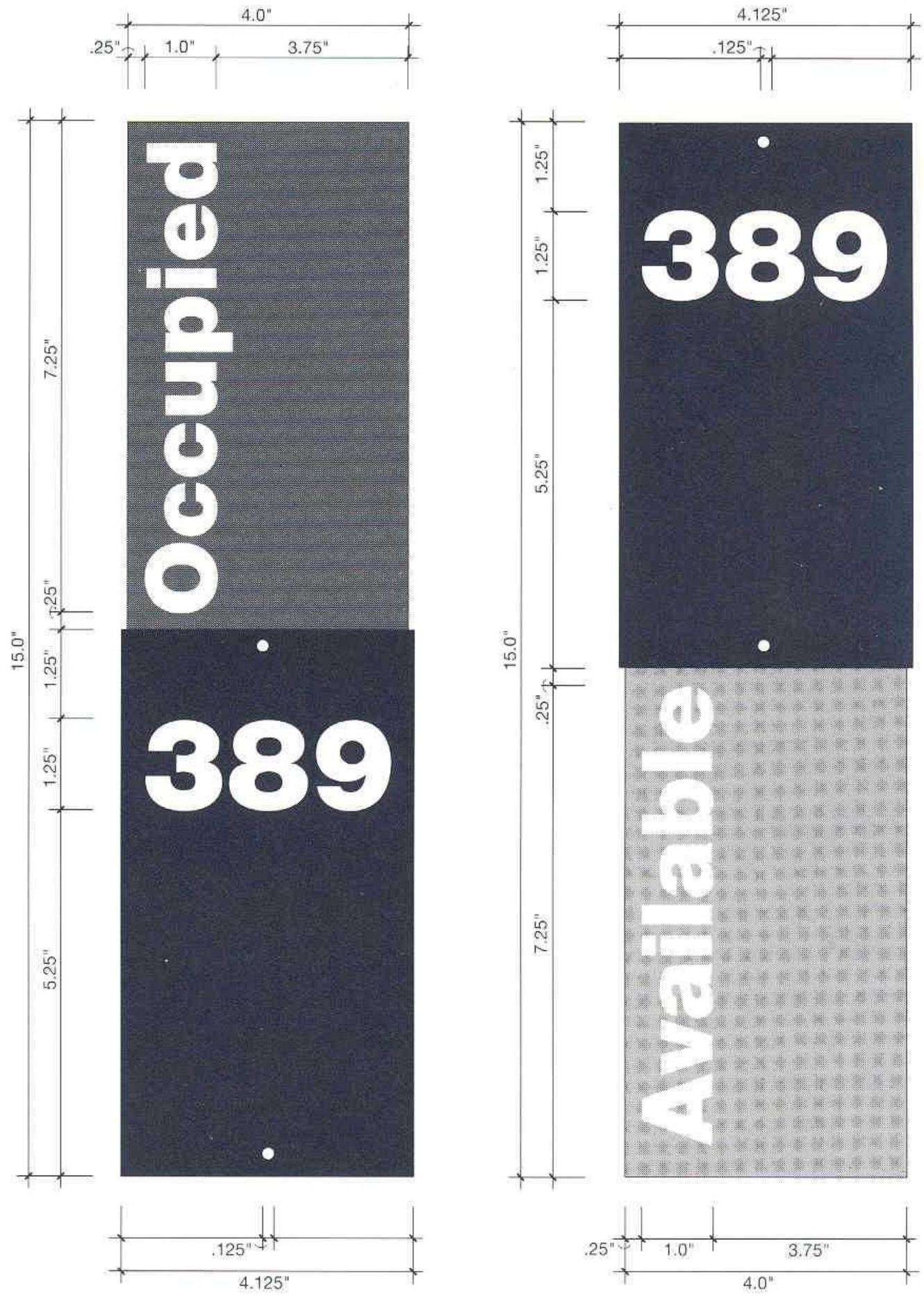

Legend Grid

All items listed below shall conform to material specifications as described on page B.6 for screen-printed signs, unless otherwise instructed on this page.

1 Retro-reflective panel, positioned with equal space to the left, right and top of the post. Multiple panels shall have the same spacing individually.

2 Flexible post.

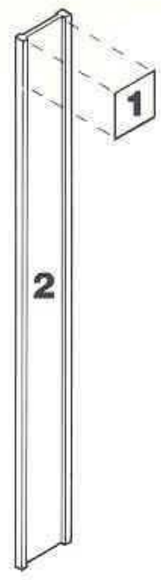

Exploded View

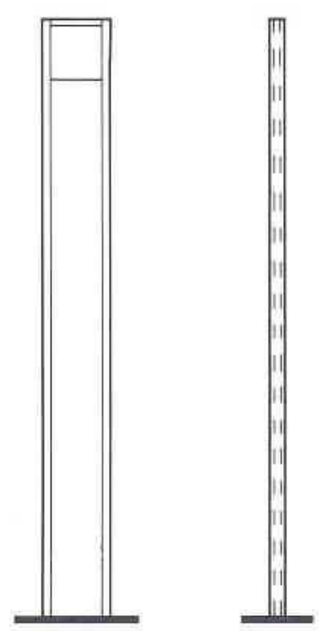

Front View Side View

Plan

Detail 1

A 2″ x 2″ aluminum keyhole receiving plate, attached to the back of the panel. Area with dotted line indicates a routed slot, necessary to receive the hex head or nut.

B .375" bolts with 0.5625" hex heads and hex nuts. Bolt shall be attached through frame with 0.125" of shaft exposed on both sides to allow attachment.

C 2″ x 4″ or 4″ x 4″ frame.

D Sign panel.

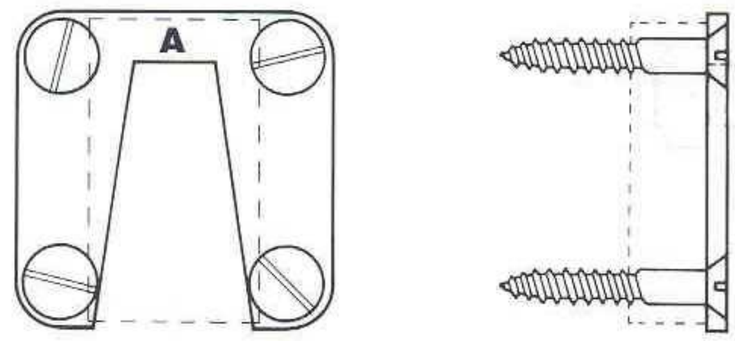

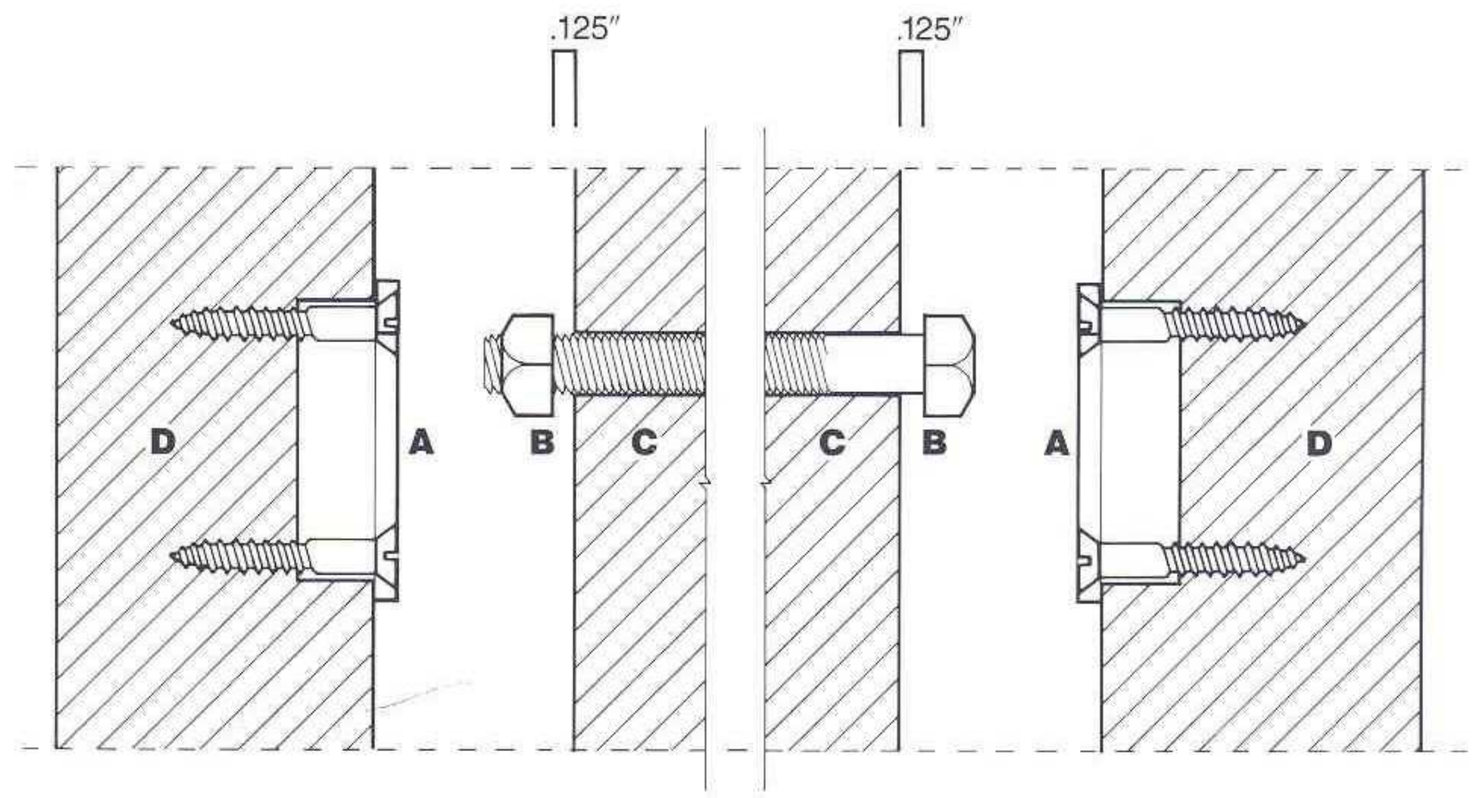

Detail 2

A 2″ x 2″ or 3″ x 3″ aluminum angle bracket.

B .375″ lag bolt, or approved equal.

C 2″ x 4″ or 4″ x 4″ frame.

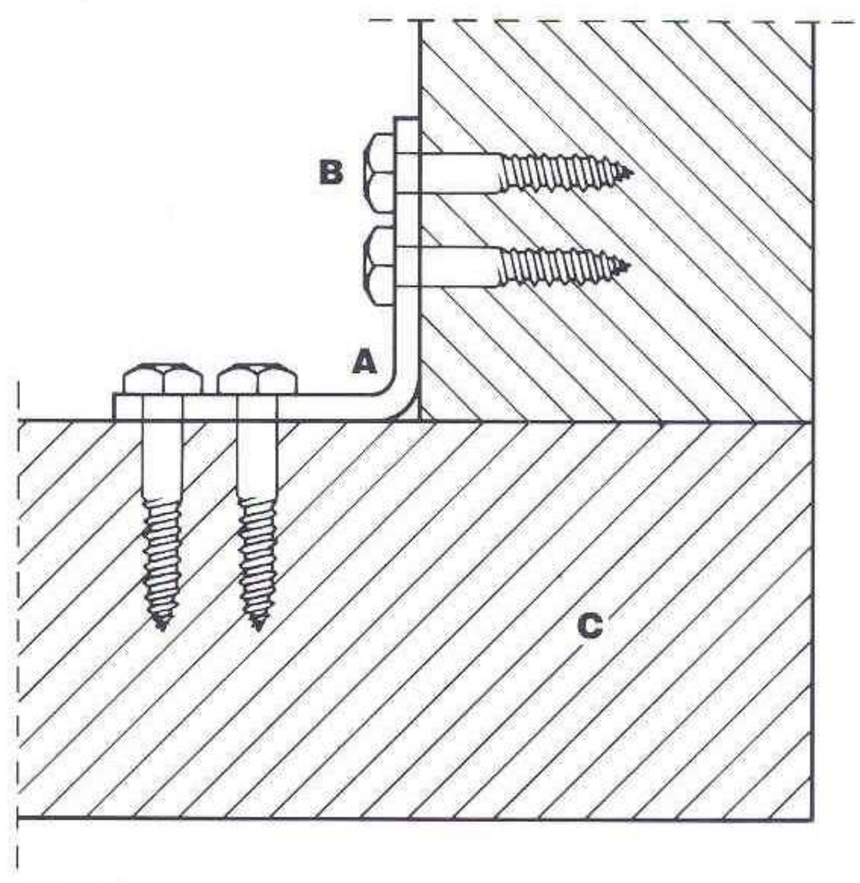

Side View

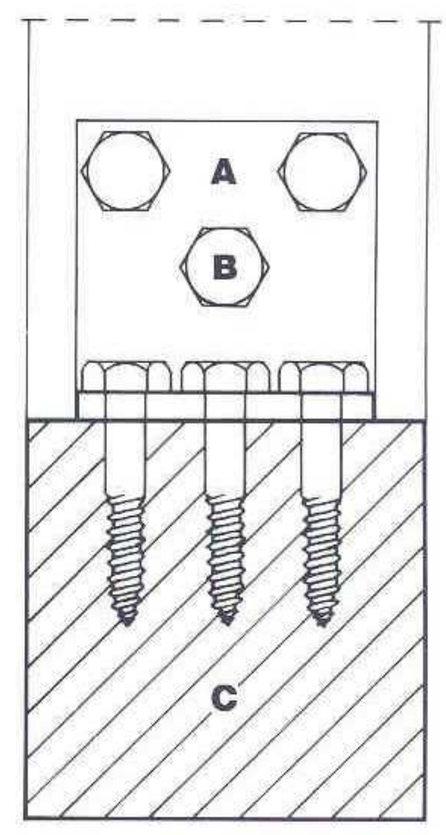

Front View

Detail 3

A 0.3125" socket head cap screw and 0.3125" washer, countersunk at least 0.25" from the surface of the sign post

B Solid or glue laminated post

C Sign panel with 2" x 1.25" routed endstrip creating a 0.5" reveal

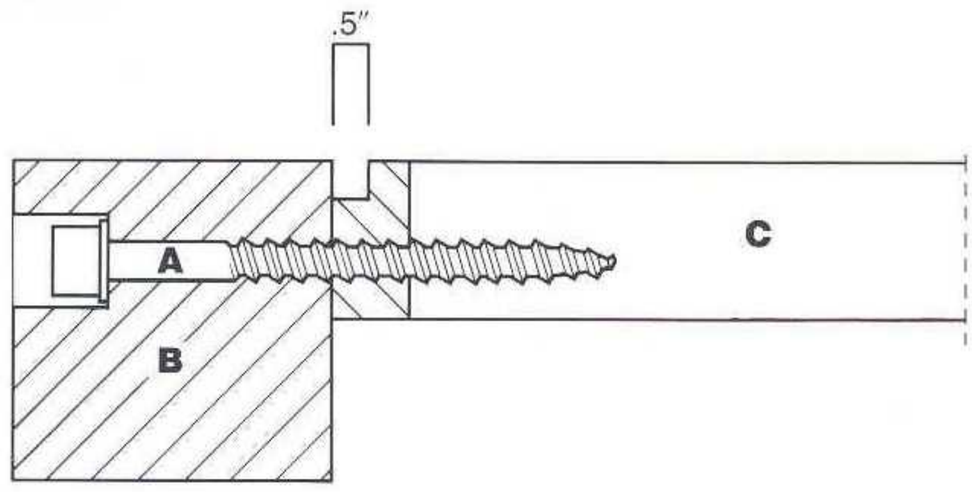

Detail 4

A 0.3125" socket head cap screw and 0.3125" washer, countersunk at least 0.25" from the surface of the sign post

B Solid or glue laminated post.

C Sign panel with 2" x 1.25" routed endstrip creating a 0.5" reveal

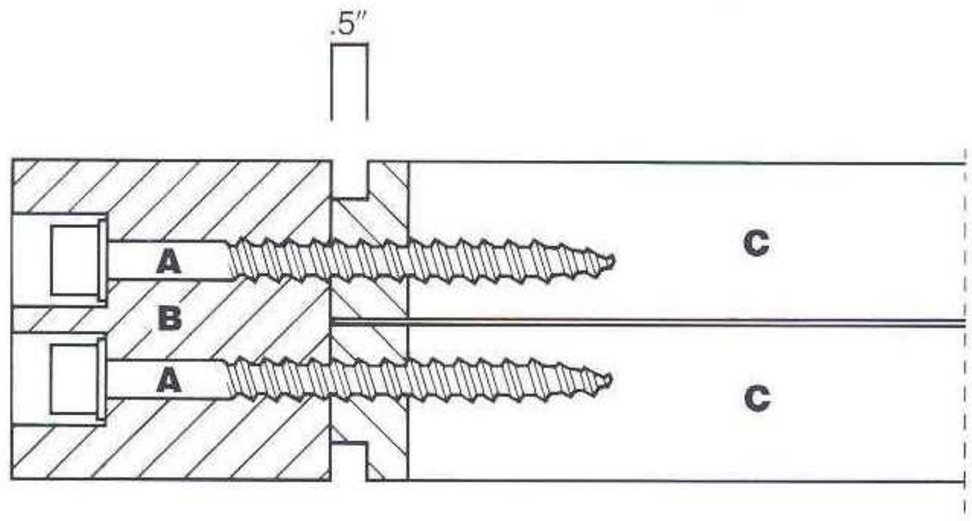

Detail 5

A 0.375" socket head cap bolt and 0.375" washer, countersunk at least 0.25" from surface of sign post

B 0.375" 4-prong straight barrel T-nut, countersunk and back-filled with Bondo or approved equal, flush to the front of the panel

C Retro-reflective sheeting applied after insertion of the hardware to the sign panel

D Solid or glue laminated post

E HDO sign panel

NOTE: alternate hardware may be used as shown in detail 10, page B.7-4.

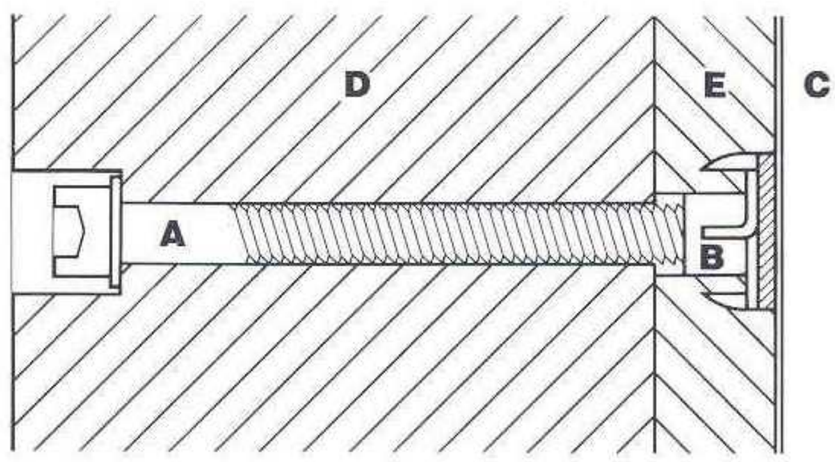

Detail 6

A 0.375" socket head cap bolt and 0.375" washer, countersunk flush to the front of the sign panel

B 0.375" 4-prong straight barrel T-nut, countersunk and back-filled with Bondo or approved equal, flush to the front of the panel

C1 Retro-reflective sheeting, applied after insertion of the hardware to the sign panel

C2 Retro-reflective circular patch matching panel sign face

D Solid or glue laminated post

E HDO sign panel

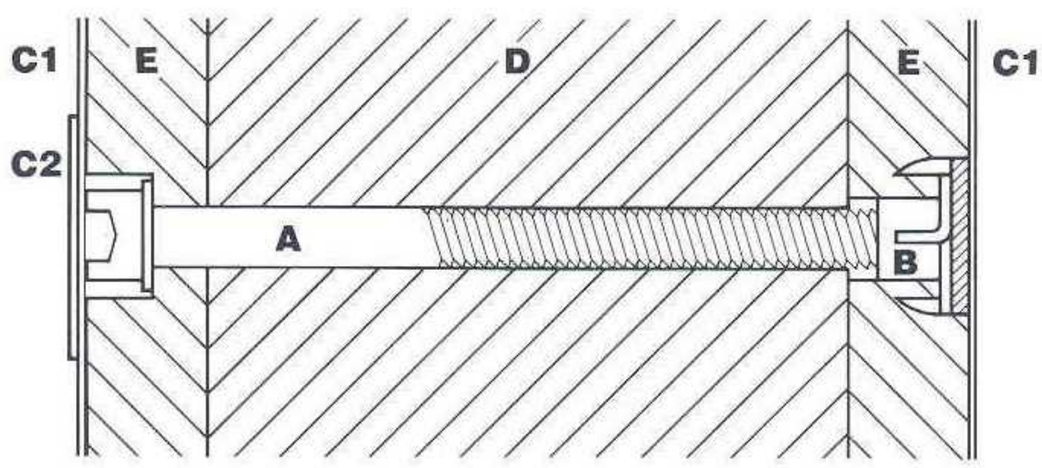

Detail 7

A 0.375" socket head cap bolt and 0.375" washer, countersunk at least 0.25" from the surface of the sign face

B 0.375" metal or plastic capped nut

C Retro-reflective sheeting

D Solid or glue laminated post

E Aluminum sign panel

NOTE: alternate hardware may be used as shown in detail 10 and 12, page B.7-4.

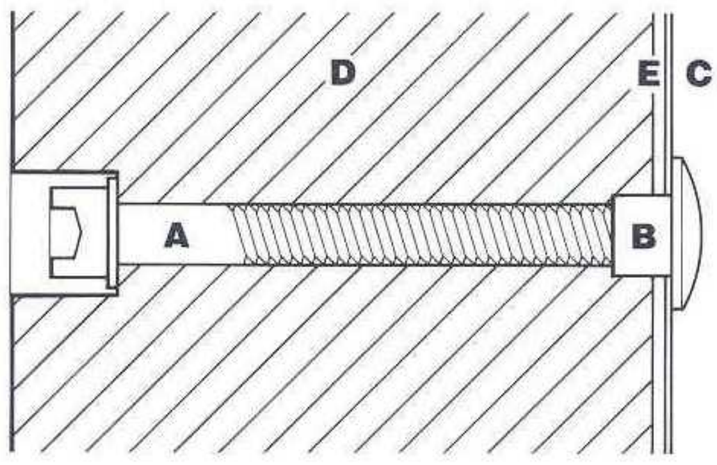

NOTE: Length of bolt shaft to be 0.375"-0.5" less than combined post and panel assembly. Verify that tightened bolt will not impede upon sign face.

Detail 8

A .25″ stainless steel hex head cap screw with .25″ flat stainless steel and .25″ PVC washer.

B .25″ 4-prong straight barrel T-nut, countersunk and back-filled with Bondo or approved equal, flush to the front of the panel.

C 3″ x 2.6875″ x 2.6875″ aluminum 6061-T6 "Z" bar, .25″ thick.

D .375″ socket head cap screw and .375″ washer, countersunk at least .25″ from the surface of the sign post.

E .375″ zinc-plated hex nut with .375″ zinc-plated flat washer.

F Glue laminated or solid post.

G HDO sign panel.

H Retro-reflective sheeting, applied after insertion of the hardware to the sign panel.

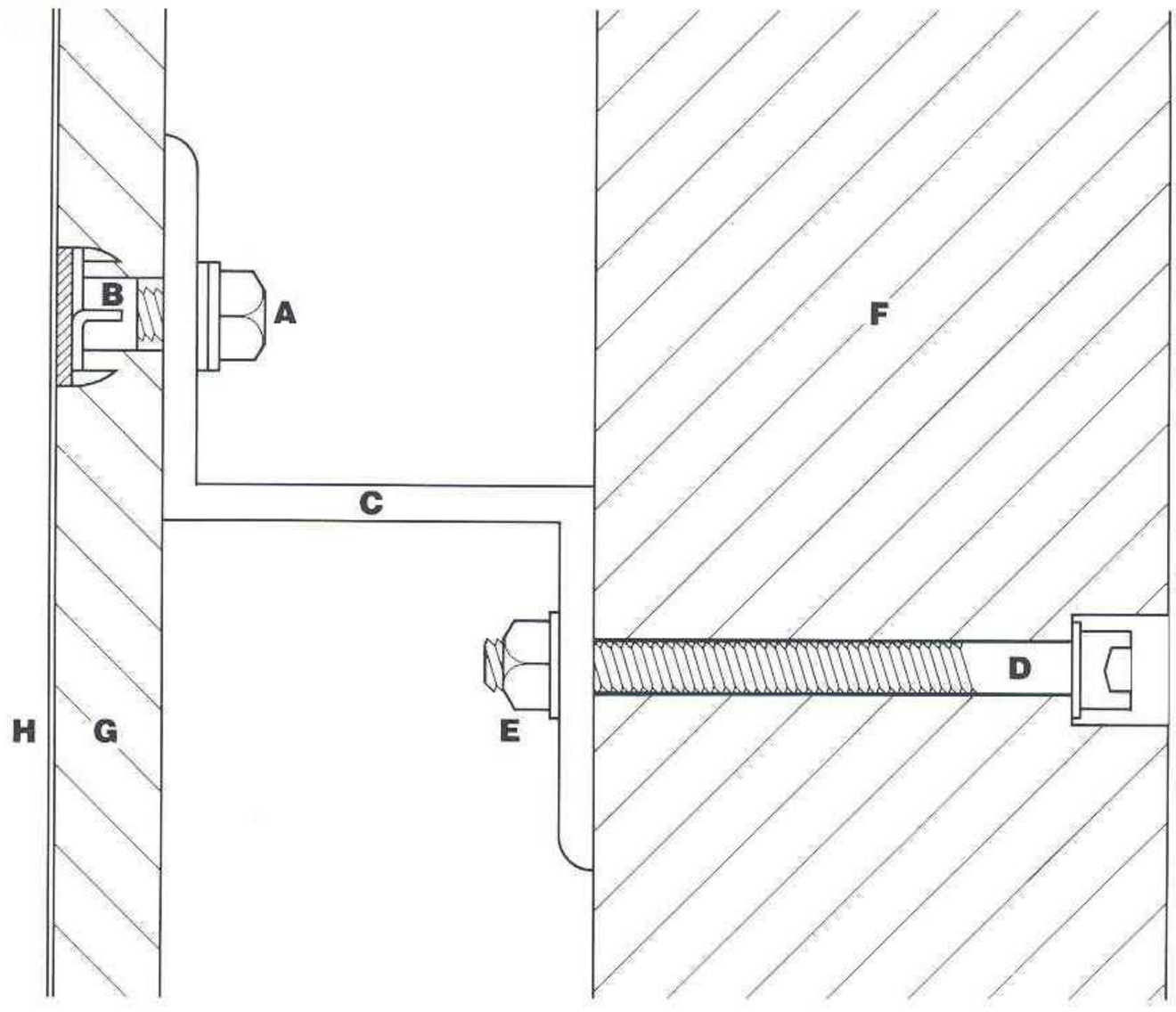

Detail 9

A 0.25″ threaded aluminum stud, welded to surface of sign panel

B 0.25″ Zinc-plated hex nut and washers

C 3″ x 2.6875″ x 2.6875″ aluminum 6061-T6 "Z" bar, 0.25″ thick

D 0.375″ socket head cap screw and 0.375″ washer

E 0.375″ zinc-plated hex nut with 0.375″ zinc-plated washer

F Glue laminated or solid post.

G 0.125″ Aluminum sign panel (6061-T6)

H Retro-reflective sheeting

NOTE: For illustration purposes a directional sign panel attachment has been shown. This detail may also be used for identification signs where the "Z" bar is to receive slotted holes to fit over the lag bolt which is attached to the internal frame (see detail below)

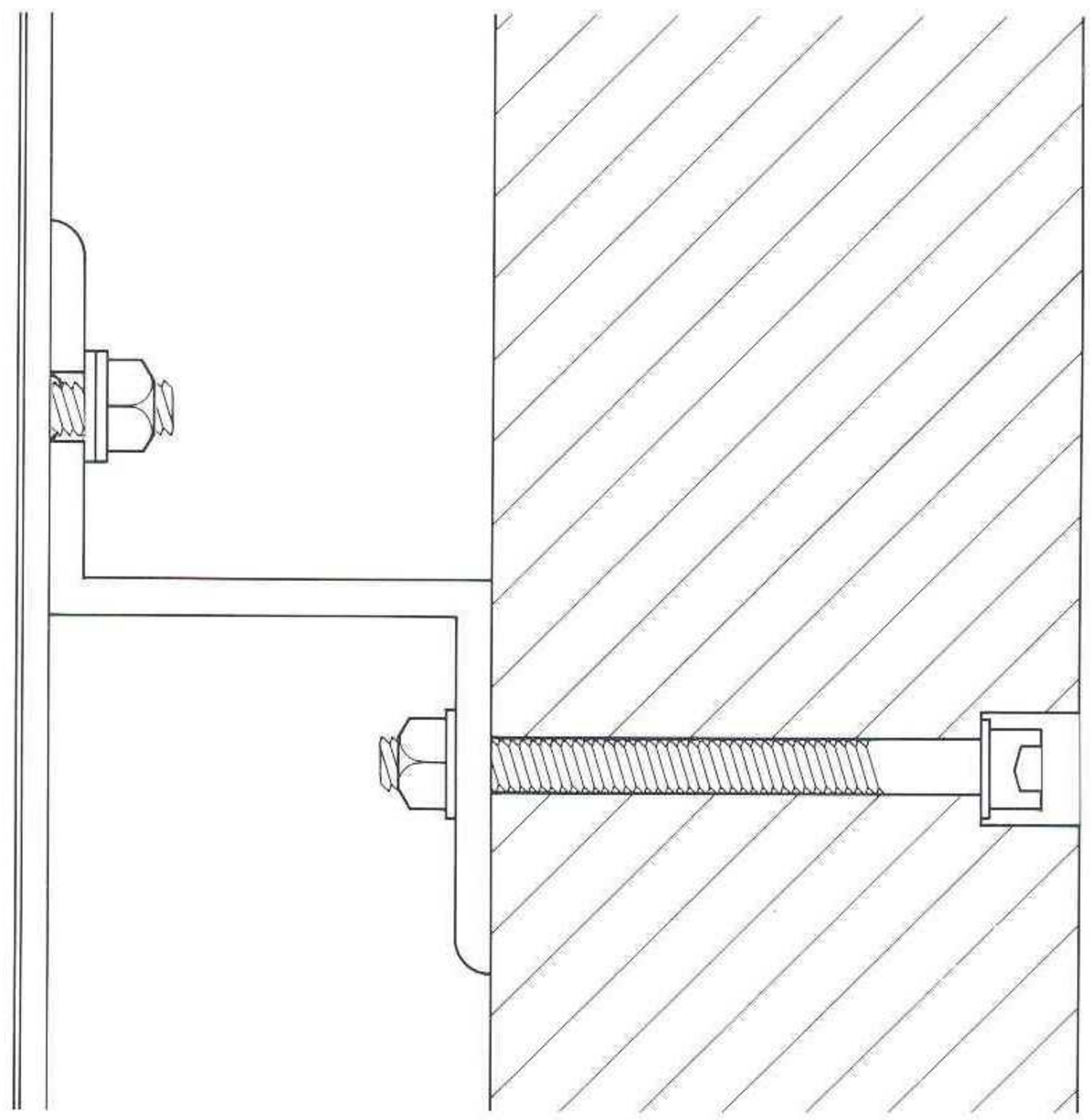

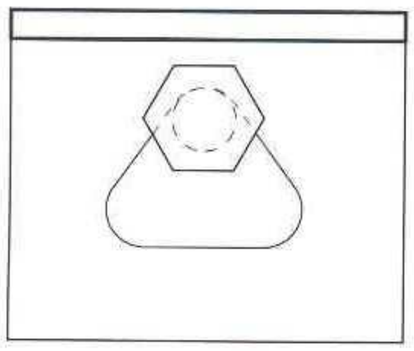

Detail 10, threaded insert

Threaded insert to be used in lieu of "Dodge" type fastener , which is not allowed. This die cast fastener allows controlled engagement without forced damage to the wood. Self tapping with high retention in blind, edge, and end grain applications. Use proper tools and follow manufacturers directions for use.

A Self tapping zinc alloy threaded die cast insert

B 1/4-20 machine bolt

C Glue laminated or solid post

D HDO panel with retro-reflective sign face

E Silicone adhesive

NOTE: To prevent water from entering the bolt connection, prior to assembly, apply a bead of silicone adhesive around perimeter of the hole.

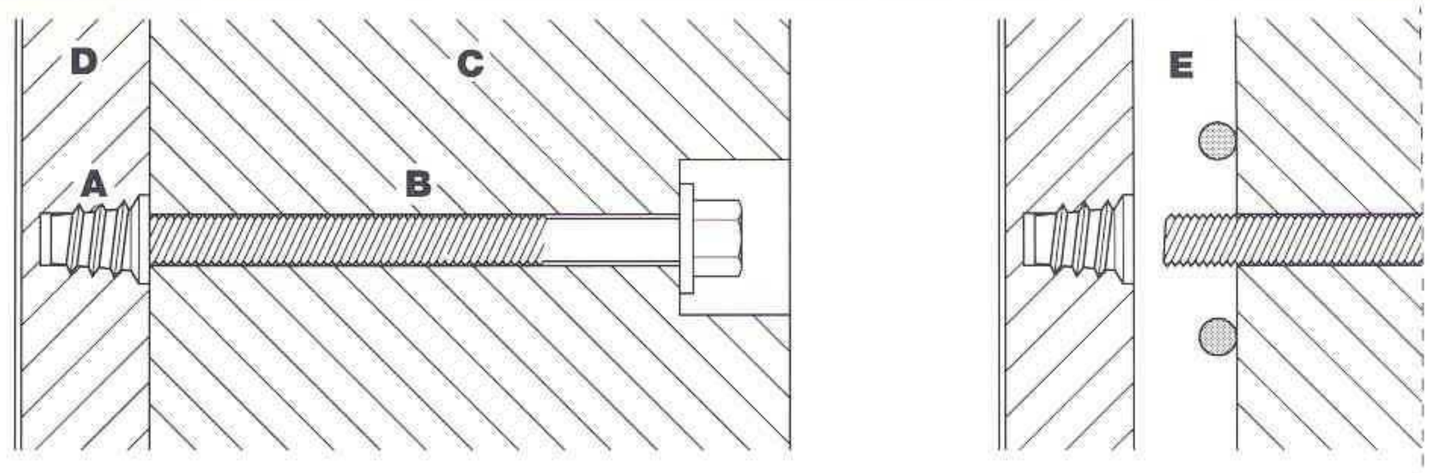

Detail 11, carriage bolt

A Carriage bolt

B Nut and washer

C Neoprene washer

D Glue laminated or solid post

E Aluminum panel with retro-reflective sign face

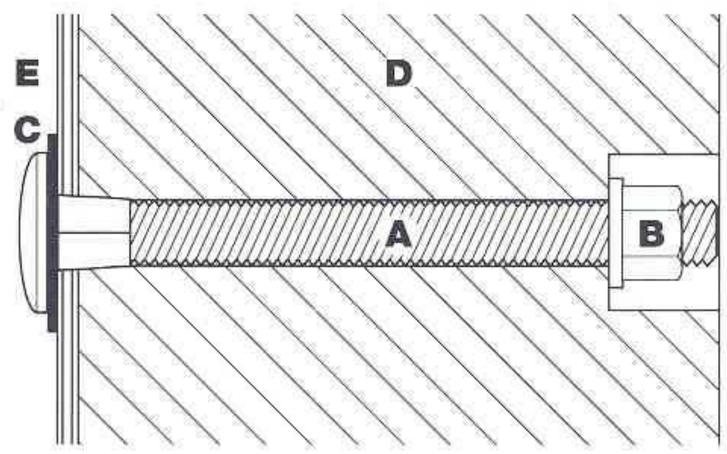

Detail 12, "Tuff" nut

A Carriage bolt

B Tamper resistant "Tuff"-nut, or other tamper resistant hardware, and washer

C Neoprene washer

D Glue laminated or solid post

E Aluminum panel with retro-reflective sign face

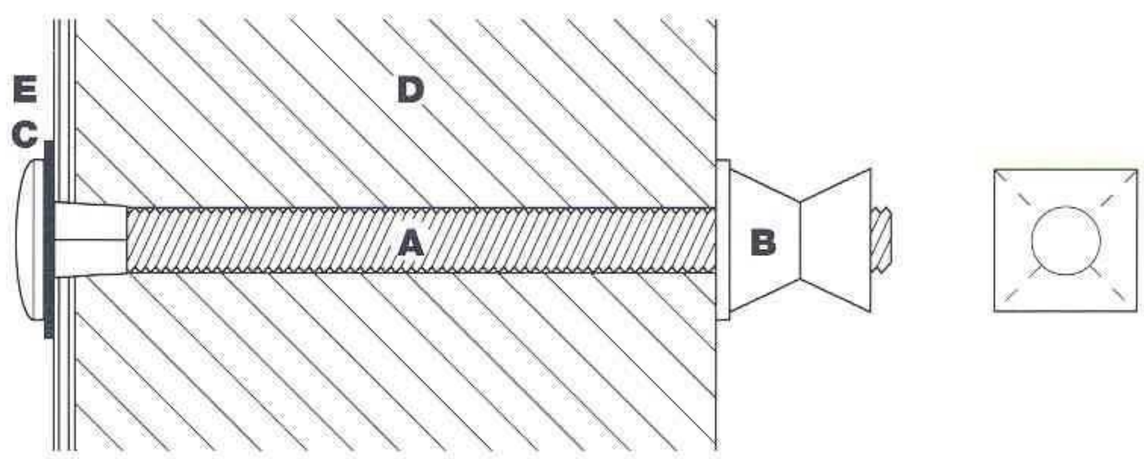

Detail 13, pipe mounting

A Self tapping zinc alloy threaded die cast insert

B 1/4-20 machine bolt

C Pipe gate or railing

D HDO panel with retro-reflective sign face

E Aluminum or steel "U" channel to stabilize sign panel. Size depends on diameter of pipe.

NOTE: Item A and B are used for illustration purposes only. Hardware shown in details 5, 7, 10, 11, and 12 may be used for this configuration.

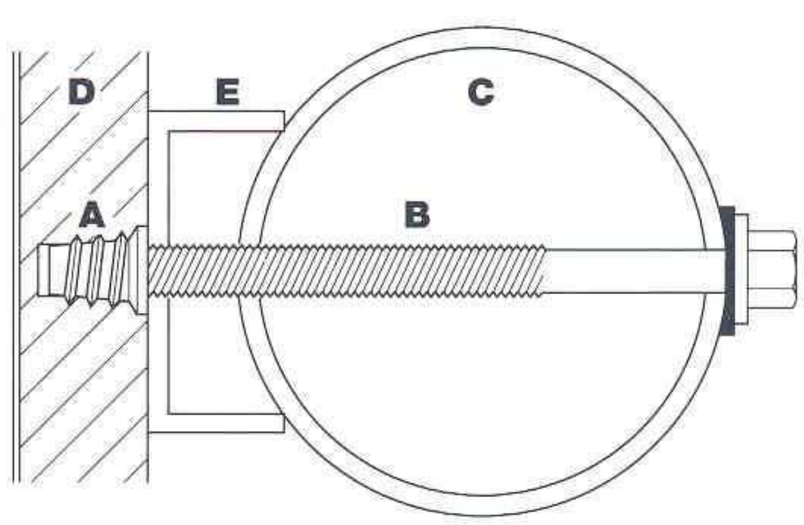

Detail 14, fence mounting

A Chain link fence

B Sign panel

C Metal backing plate

D Panel attachment hardware Hardware shown in details 5, 7, 10, 11, and 12 may be used for this configuration.

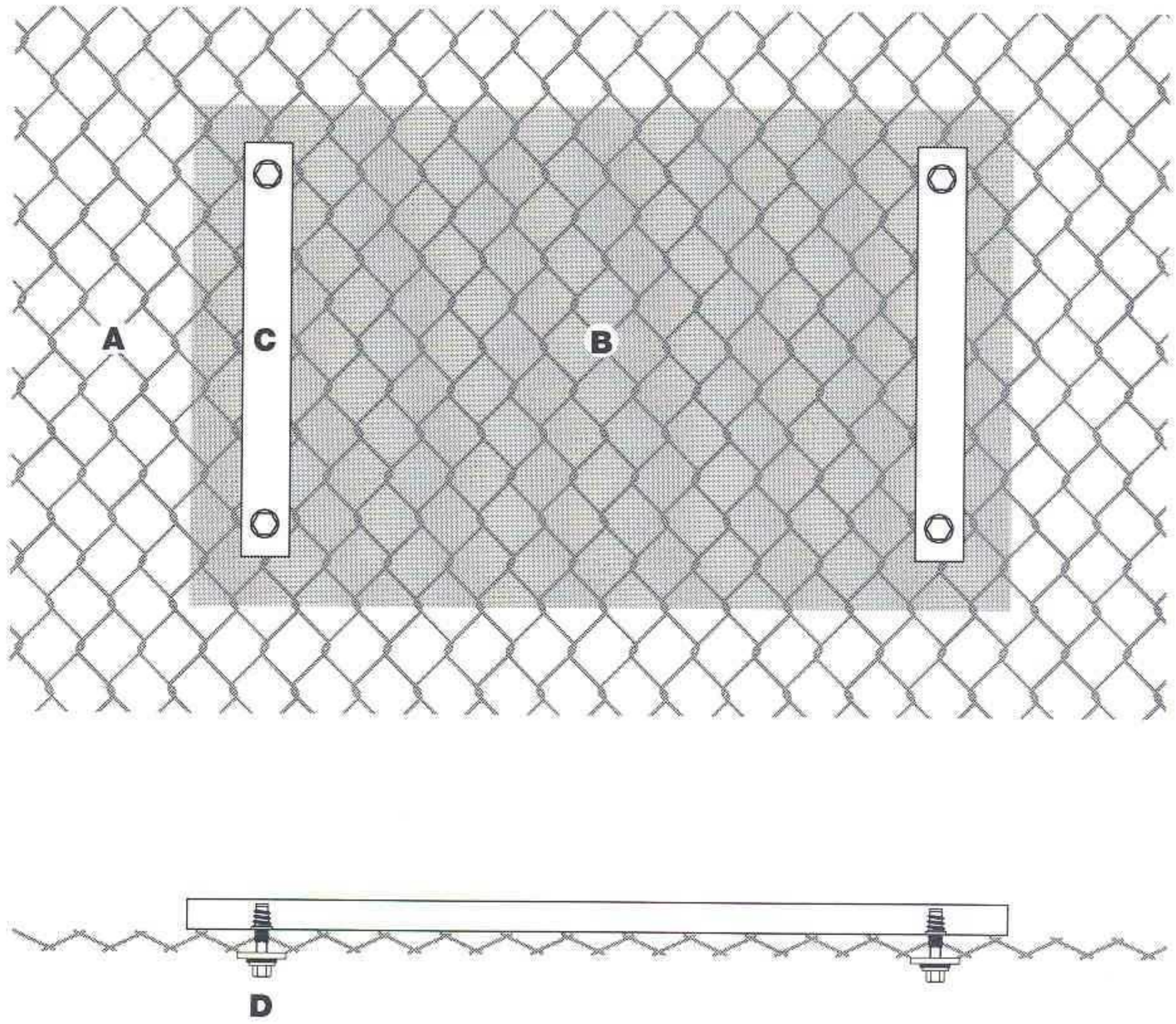

Detail 15, removable inserts

A Sign panel

B Insert panel

C Aluminum strips equal in length to the height of the insert panel

D Countersunk flathead bolt with washer and nut

E Aluminum stop, attached with countersunk flathead bolt

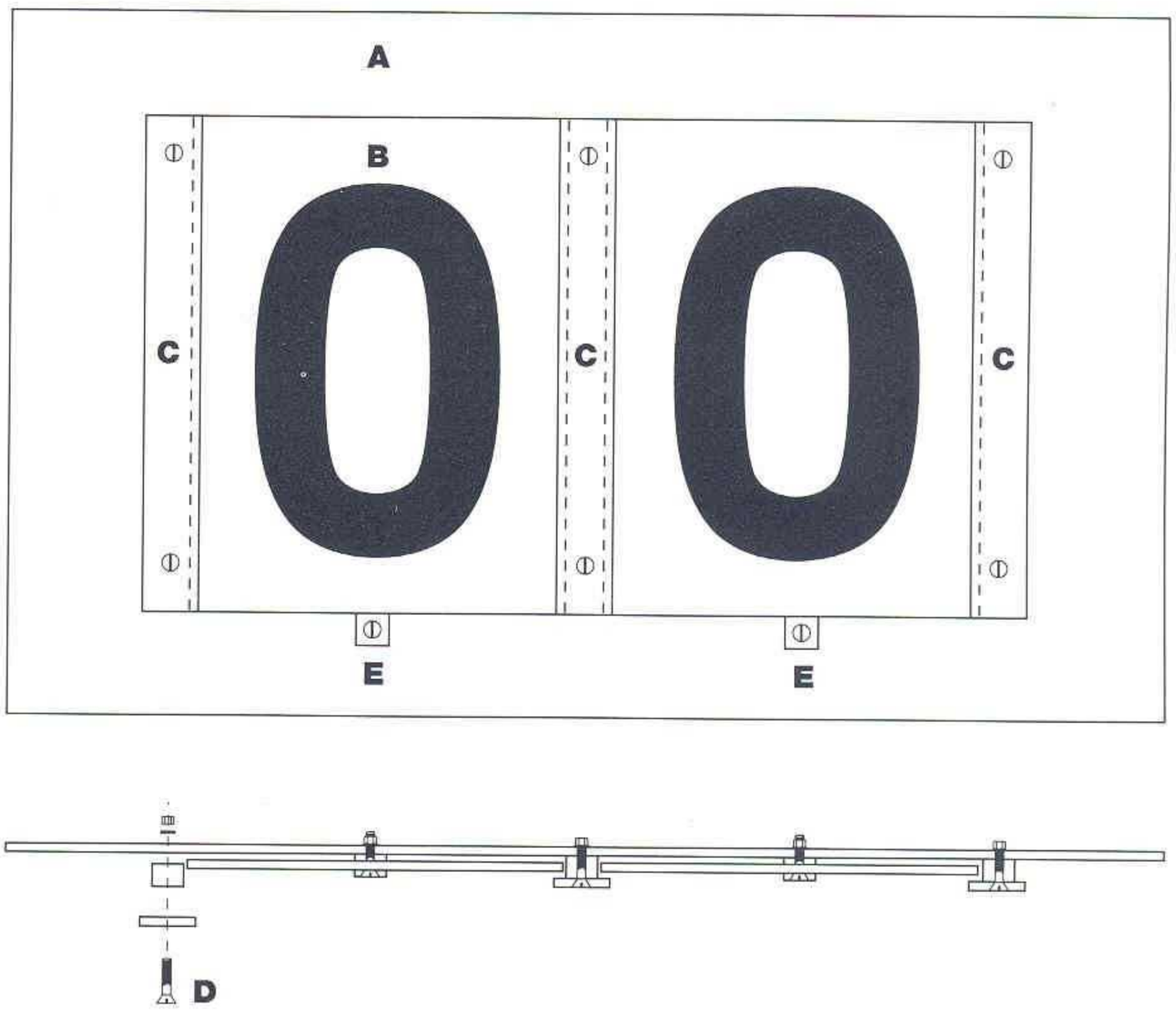

Detail 16, splicing with bolts

When the physical size of the sign panel is larger than readily available sheet aluminum material (4′ x 8′, 4′ x 10′, 4′ x 12′, 5′ x 12′), the composite face panel will require splicing. To minimize the use of backing strips, ideally use the "L" rails to join the aluminum sign panels, see page B.7-7 for attachment detail.

A "L" rail or aluminum back-up plate

B 0.125″ aluminum sign panel

C 0.25″ø aluminum welded studs @ 8" c/c, staggered

D Stainless steel nut and washers

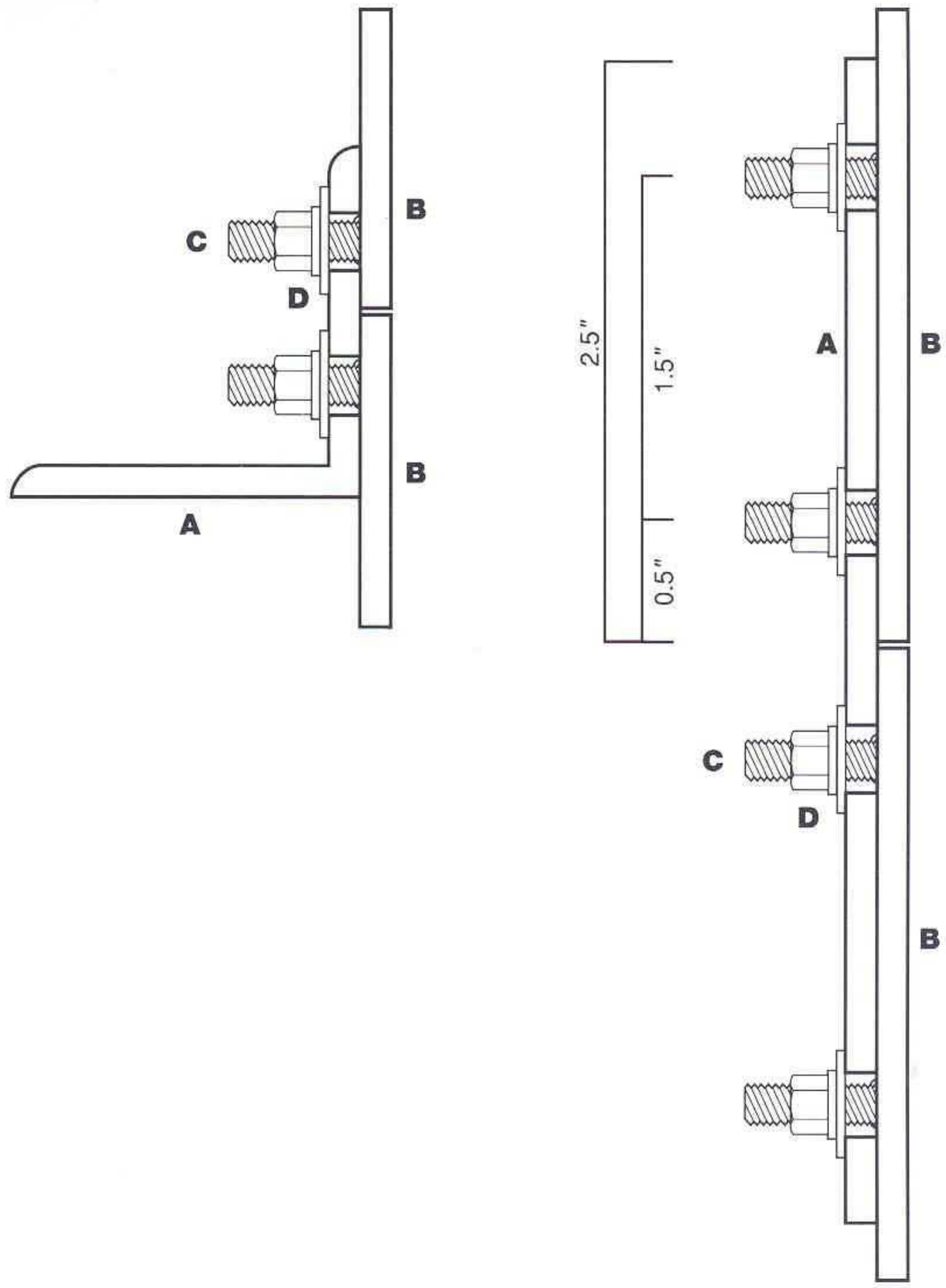

Detail 17, splicing with welds

A 0.125″ aluminum sign panel

B 0.125″ x 5″ x length, aluminum backing bar

C 0.25″ plug welds @ 8″ c/c, staggered

NOTE: An alternate to using the above bolt connection, is welding the two plates together in the shop by either spot welding the backing bar or a continuous weld. This is only feasible for relatively small panels since this limits the installation at the site.

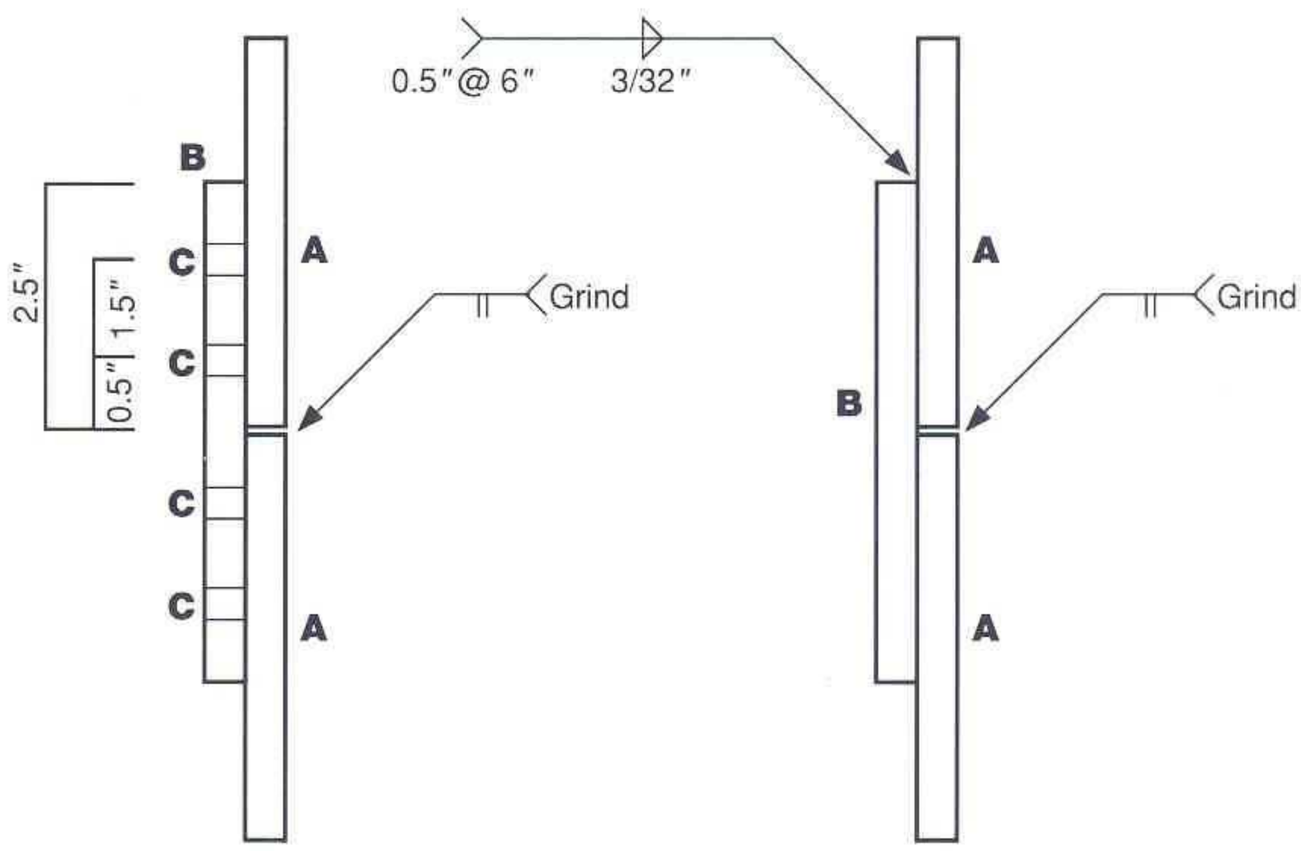

Detail 18, "L" rails

A Steel beam or tubular post

B 0.125" aluminum sign panel

C L-rail, size of rail is referenced on each individual engineering example page

D L-bracket, length shall be equal to the width of the post. Size of clip is referenced on each individual engineering example page

E Panel attachment hardware, 0.25" ø aluminum welded studs with nut and washers

F 0.625"ø stainless steel connecting bolt, nut and washers

G 0.625"ø stainless steel post connecting hardware, length varies depending on post size. L-bracket can also be welded to the post.

NOTE: Item A is used for illustration purposes only. Post may be a beam or tubular steel, or in case of a wall mounted sign, the L-rail will be directly attached to the mounting surface.

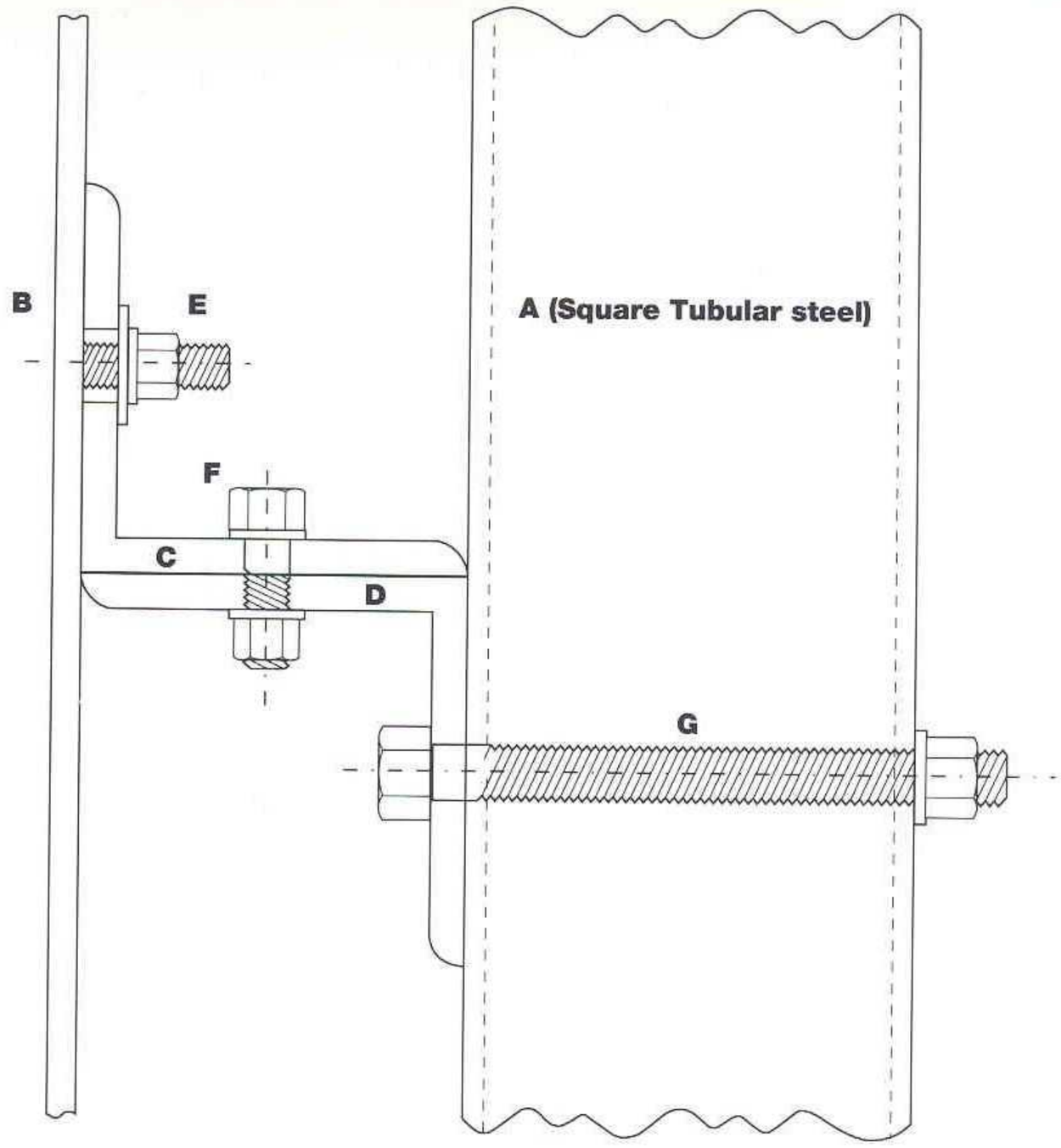

Detail 19, tube connection

A Tubular post

B 0.625" x 5" x 11" plate

C 3" x 3" x 0.25" x 5" L-bracket

D 0.625"ø stainless steel connecting bolt. Tap hole in plate and tubular post

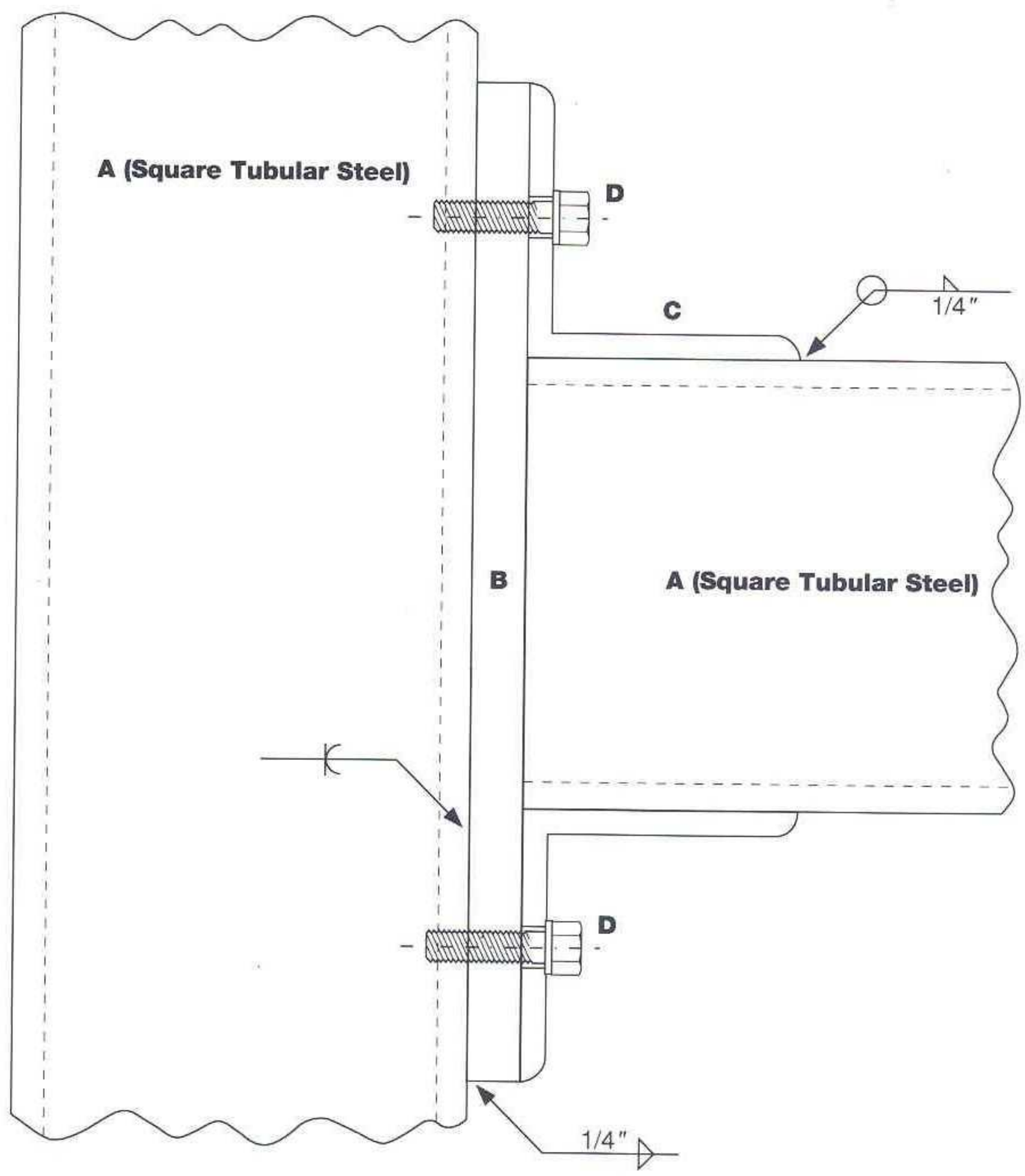

Detail 20, flag connection

- **A** Square tubular post
- **B** 0.125" aluminum sign panel
- **C** 0.5" x 5" x 10" plate
- **D** 3" x 3" x 0.25" x 5" L-bracket
- **E** Panel attachment hardware, 0.375" ø aluminum welded stud with nut and washer
- **F** 0.625" ø stainless steel connecting bolt, nut and washers

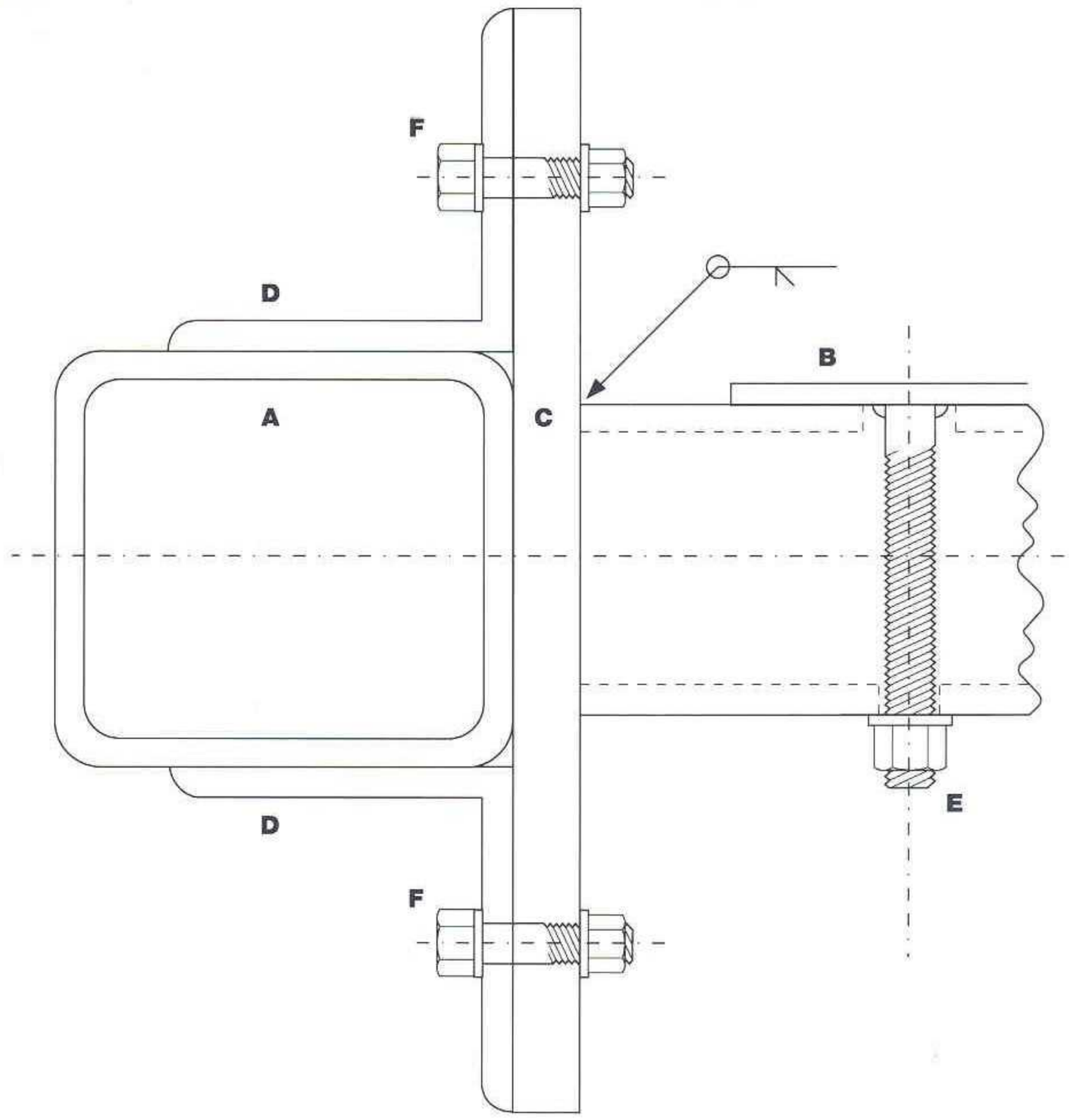

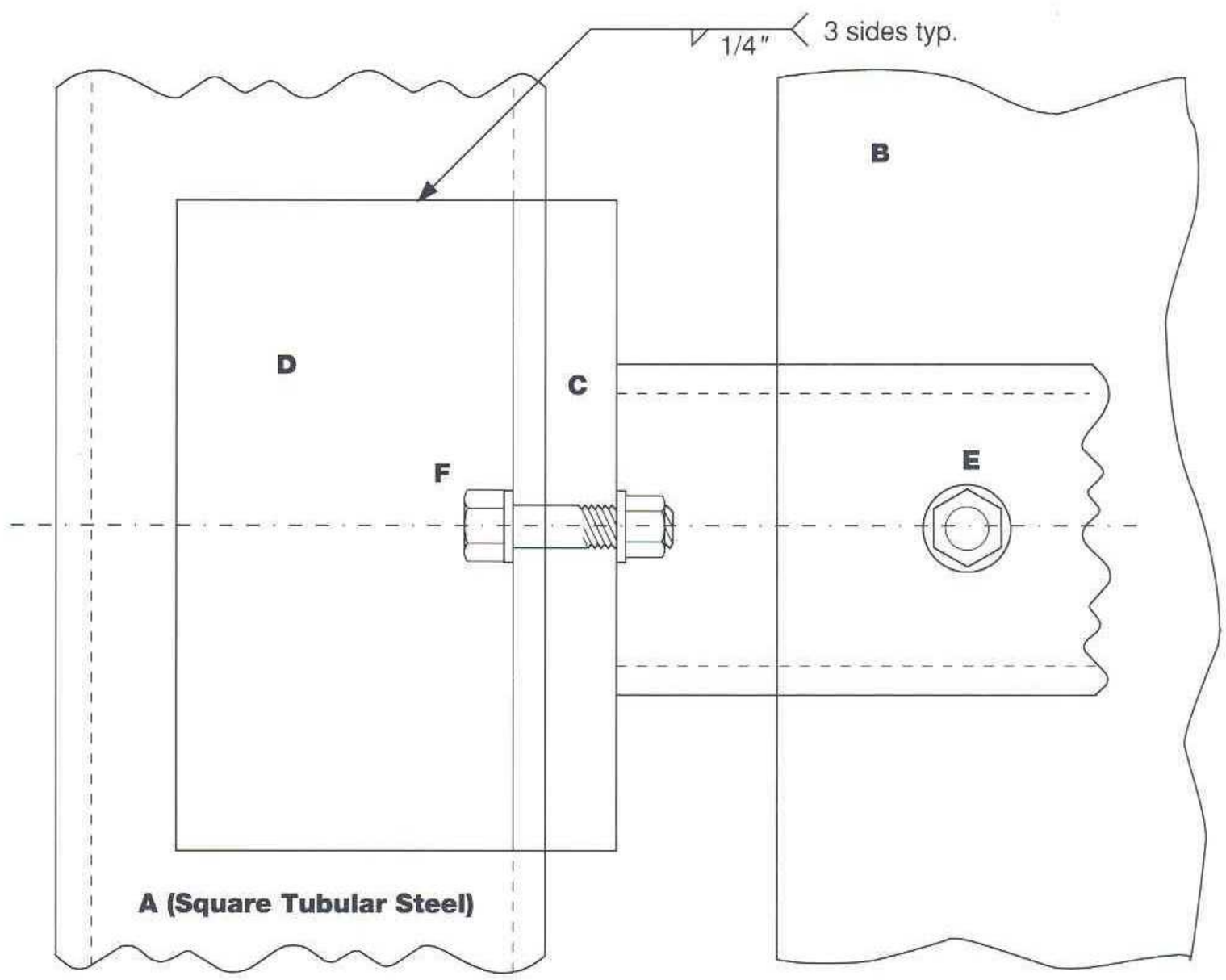

Detail 21, base plate

- **A** Steel beam or tubular post with 0.25" welded cap
- **B** Base plate (W x L x T)
- **C** Hole for anchor bolt
- **D** Hot-dip galvanized jam nut, hex nut and plate washer
- **E** Hot-dip galvanized leveling nut and plate washer
- **F** Hot-dip galvanized anchor bolt (Hooked). Use stainless steel HILTI HVA anchors, or equal, for attachment to existing surfaces.
- **G** Concrete (3000 PSI, 28 days)

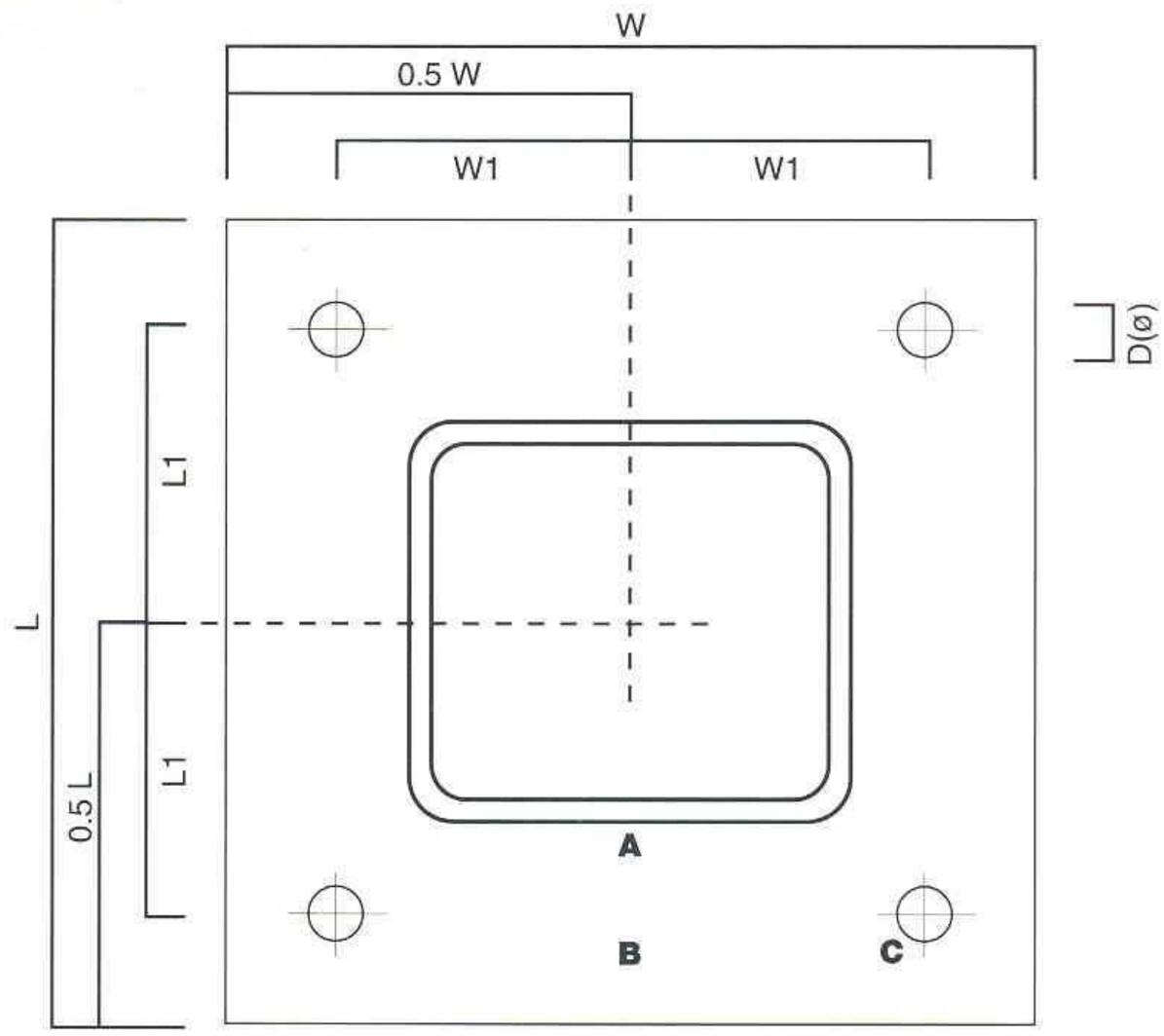

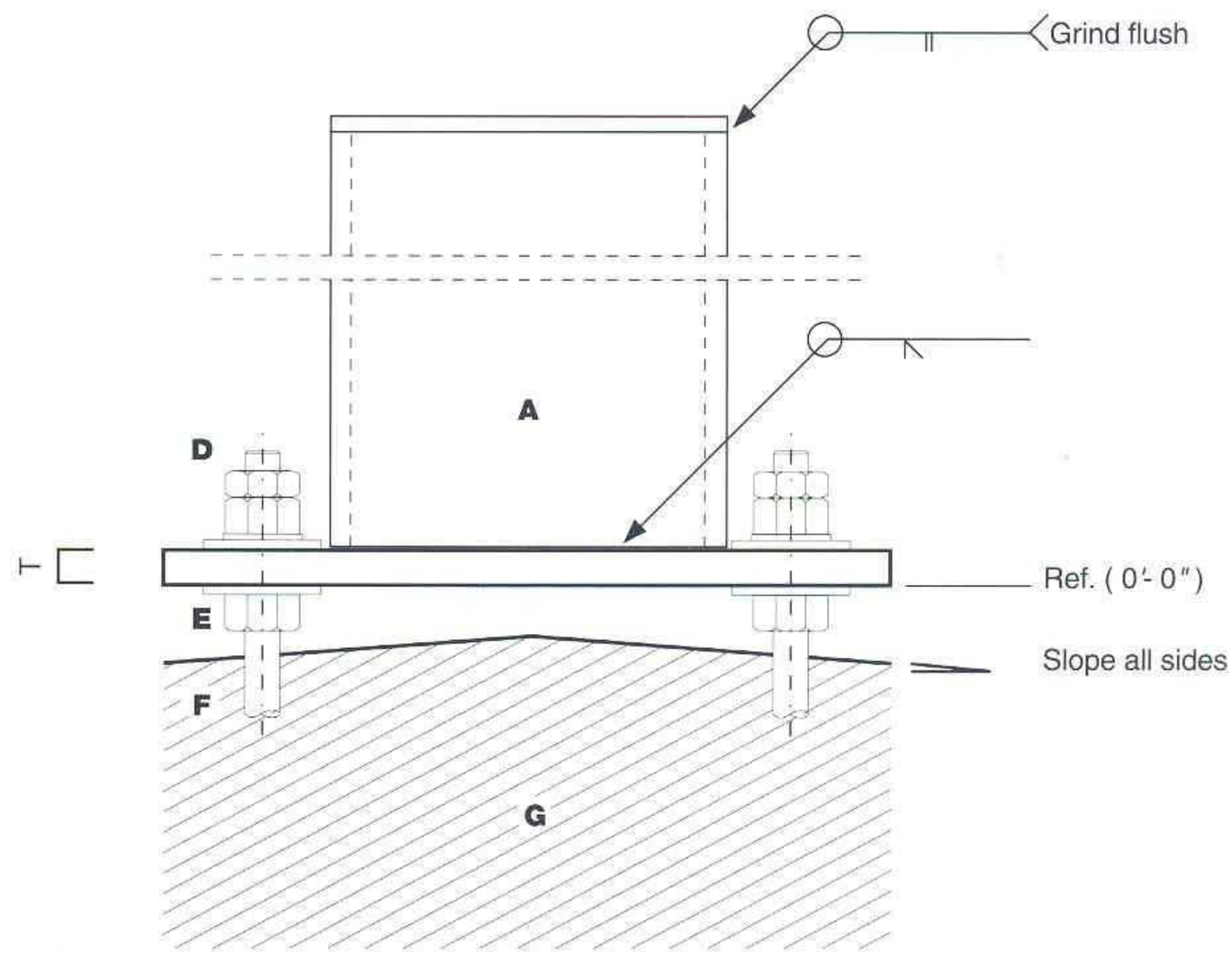

Base plate details for engineered examples (dimensions in inches)

Page Reference	Sign Type	Base Plate L1	W1	Dø	Plate Washers
B.13-8	WDA-1	4.5	7.5	1.25	0.375 x 3 x 3
B.13-8	WWA-1	6	10	1.75	0.5 x 4 x 4
B.13-9	WWA-1	6	9	1.5	0.375 x 2.5 x 2.5
B.13-9	WLI-8/9	3	3	0.875	0.375 x 2.5 x 2.5
B.13-10	WLI-13	3	3	0.875	0.375 x 2.5 x 2.5
B.13-10	WDA-22	2.25	2.25	0.875	0.375 x 2 x 2
B.13-11	WPM-1/WSM-1	3.5	3.5	1.125	0.375x 2.5 x 2.5
B.13-11	WS-000	2.75	2.75	0.875	0.375 x 2 x 2
B.13-12	WLI-12	2.25	2.25	0.75	0.375 x 2 x 2
B.13-12	WLI-26	2.75	2.75	0.75	0.375 x 2 x 2
B.13-13	WLI-5	3.5	3.5	1	0.375 x 2.5 x 2.5
B.13-13	WDA-21	3.5	3.5	0.875	0.375 x 3 x 3
B.13-14	WLI-6/WLI-7	5	5	1.25	0.375 x 3 x 3

Detail 22, panel attachment

A 0.190 aluminum sign panel

B Square tubular steel post

C L-bracket

D Threaded stud with galvanized hex nut and washers

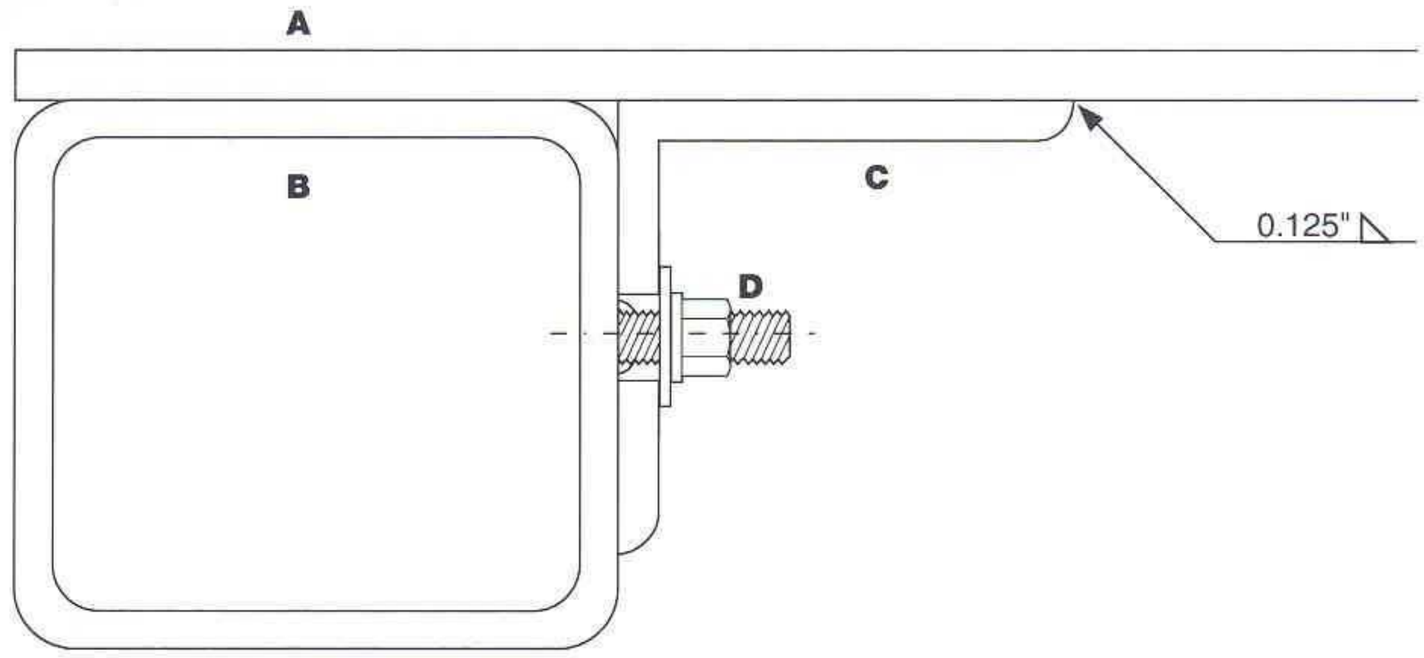

Detail 23, wall mounting

A Stainless Steel HILTI HVA anchor or equal

B L- 4"x 3"x 0.25" (LLH)

C 0.5" stainless steel bolt assembly with lock nut as shown

D L- 4"x 3"x 0.25" (LLH) connected to sign face per detail 16

E 0.5" stainless steel bolt assembly with lock nut as shown

F Neoprene insulator

NOTE: Wall mounting assembly as shown with bolts pre-attached, gives access to bolts for final attachment and allows secure suspension during attachment of final nut assembly. Number of anchor bolts and attachment bolts will depend on size of panel.

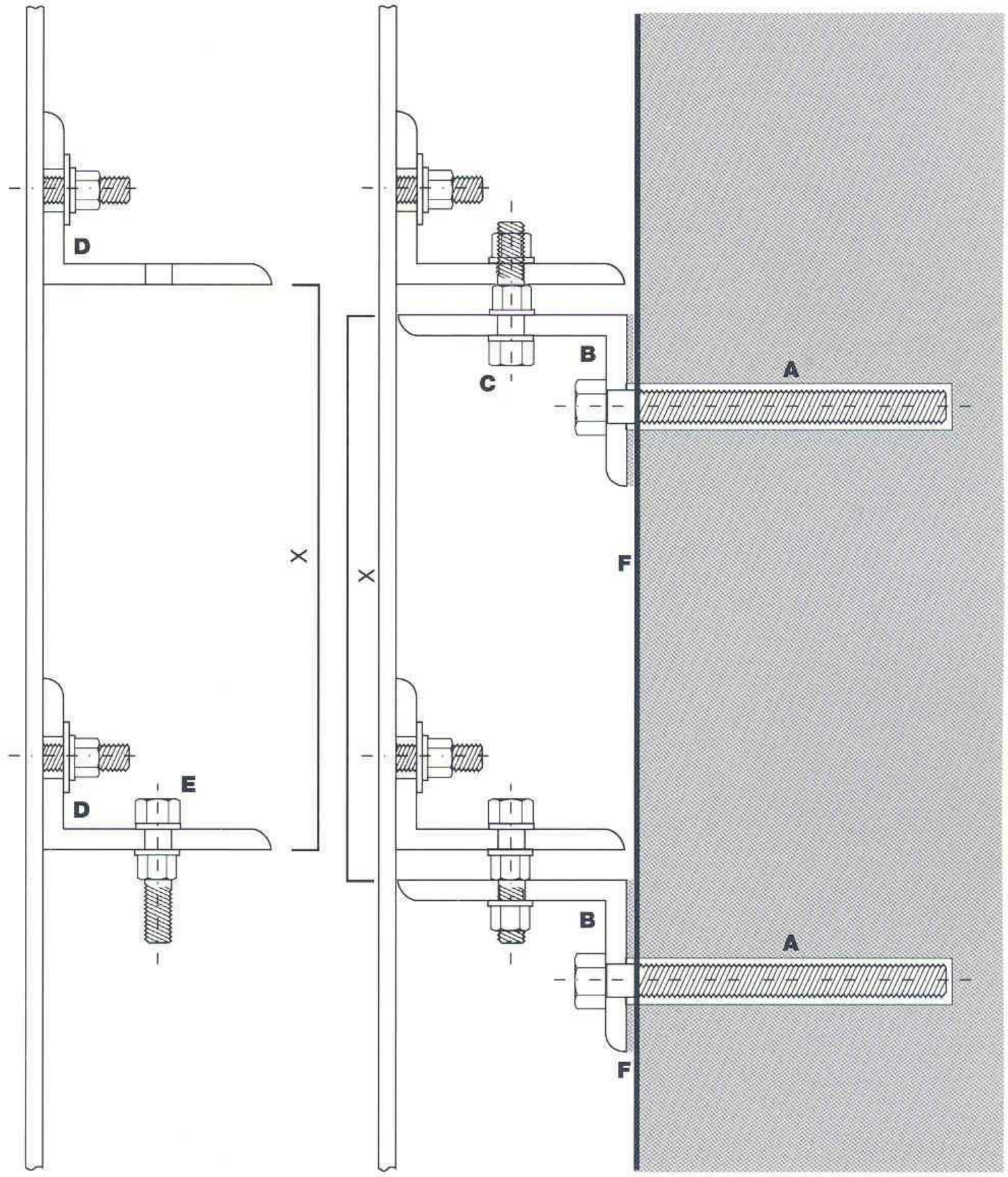

1. Materials

1.1 Signs

Wall mounted Panel Frame (23.3125" x 9.5625", 26.125" x 18.875", 12.5" x 12.5", 6.5" x 12.5", 4.5" x 8.5" and 2" x 8.5") shall be high-impact, injection molded plastic (IM-system), as manufactured by APCO Graphics, or approved equal. Integral color shall be Dark Gray for all applications.

Frame shall have square corners, configured to receive insert described below. Frame can be mounted to walls, doors and partitions with appropriate fasteners (see page B.8-5).

Wall mounted Inserts (12" x 12", 6" x 12", 4" x 8" and 1.5" x 8") shall be IM-System, as manufactured by APCO Graphics, or approved equal, with an optional Ultra IM-System non-glare, scuff-resistant overlay. Inserts have a .0625" molded reveal and self-align within frame with PresLock fasteners.

Depending on application, background colors shall be Dark Gray or Fire Red.

Header Panel & Base for Directory or Registry shall be IM-System integral color Dark Grey, as manufactured by APCO Graphics, or approved equal, with computer generated and photo screen-printed typography. Header and base are permanently attached to a protective, non-glare, clear acrylic front, sized to cover the entire face of the insert area.

Message strips (1" x 9" and 0.5" x 9") shall be IM-System integral color Dark Gray, with computer-generated and photo screen-printed typography.

Ceiling-mounted Panel Frame shall be constructed of a 0.125" "L"-profile aluminum extrusion. Frame shall have a 0.125" thick acrylic panel on each side and be filled with a rigid filler. Frame shall be mounted to the ceiling with an Ultra IM-system, as manufactured by APCO Graphics, or approved equal. Frame shall have mitered square corners, ready to receive insert described below.

Background color shall be Dark Red, Dark Green, Dark Blue or Warm Grey as shown on page 4.15.

Ceiling-mounted Inserts (10" x 30", 12" x 18") shall be IM insert, as manufactured by APCO Graphics, or approved equal. Inserts have a 0.0625" molded reveal and self-align within frame with magnetic tape.

Background color shall be Dark Red, Dark Green, Dark Blue or Warm Grey as shown on page 4.15.

1.2 Hardware

Wall mounted Frame attachment varies depending on mounting surface. For different mounting methods, see page B.8.5.

Ceiling mounted Frame attachment shall be IM-System Track, as manufactured by APCO Graphics, or approved equal. Ceiling frame shall be satin finish enamel to match Dark Gray of IMP.

2. Graphics

2.1 Silkscreen/Paint

All graphics shall comply to the standards and specifications as described under "General Conditions", page B.2-B.2a. and B.5a "Silkscreen".

Inks shall be abrasion resistant non-glare, "eggshell " or opaque semi-matte, and shall form a permanent chemical bond with the substrate. Inks shall be compatible to the substrate.

Paint shall be compatible to material to which it is applied, and shall be guaranteed not to cause discoloration, deterioration or delamination for any reason, including exposure to heat. All painted surfaces shall have a smooth, even finish and be free of imperfections, marks, scratches, dirt embedments, wave patterns and other irregularities. Paint shall be applied using a high-pressure spray in dust-free conditions and shall be thoroughly dried before being moved or assembled.

All colors shall be reproduced exactly as specified in Section 4 of the Sign Standards Manual.

Paint room facilities shall be well ventilated, dust-free and enclosed. Air temperature shall not be less than 65 degrees Fahrenheit during application of paint.

Silkscreens shall be 254 polyester monofilament or finer. Graphics are to be produced using same size photographic film positives. Hand-cut or projection-produced screens shall not be permitted.

All items listed below shall conform to material specifications as described on page B.8 for Injection Molded Plastic signs, unless otherwise instructed on this page.

1 Wall mounted Frame, (23.3125" x 9.5625" or 26.125" x 18.875") Dark Gray integral color.

2 Message strips (0.5" x 9" or 1" x 9") Dark Gray integral color.

3 Header panel and base, Dark Gray integral color, permanently attached to non-glare clear acrylic sheet.

4 Panel attachment hardware varies depending on mounting surface. See page B.8-5 for mounting details.

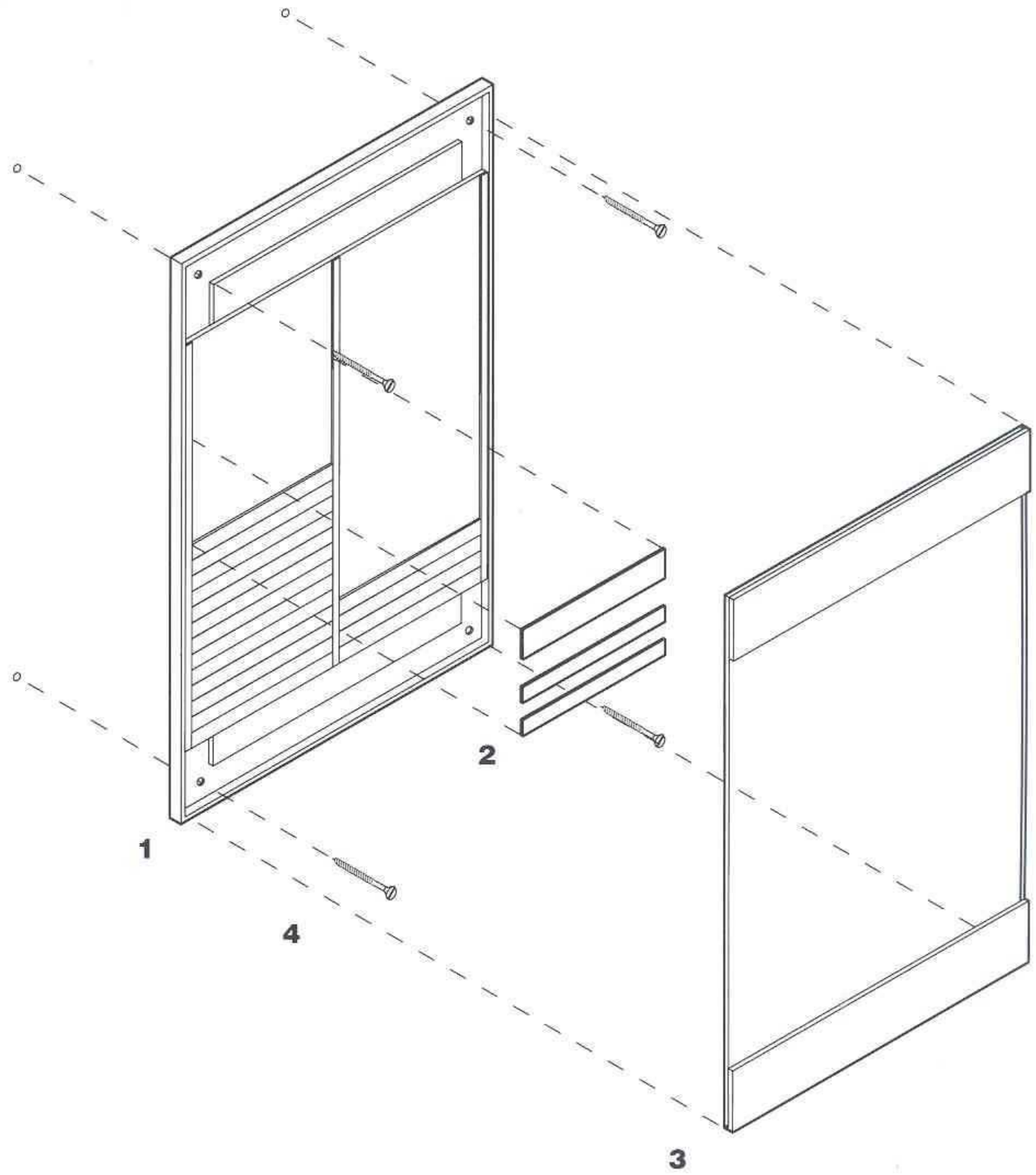

All items listed below shall conform to material specifications as described on page B.8 for Injection Molded Plastic signs, unless otherwise instructed on this page.

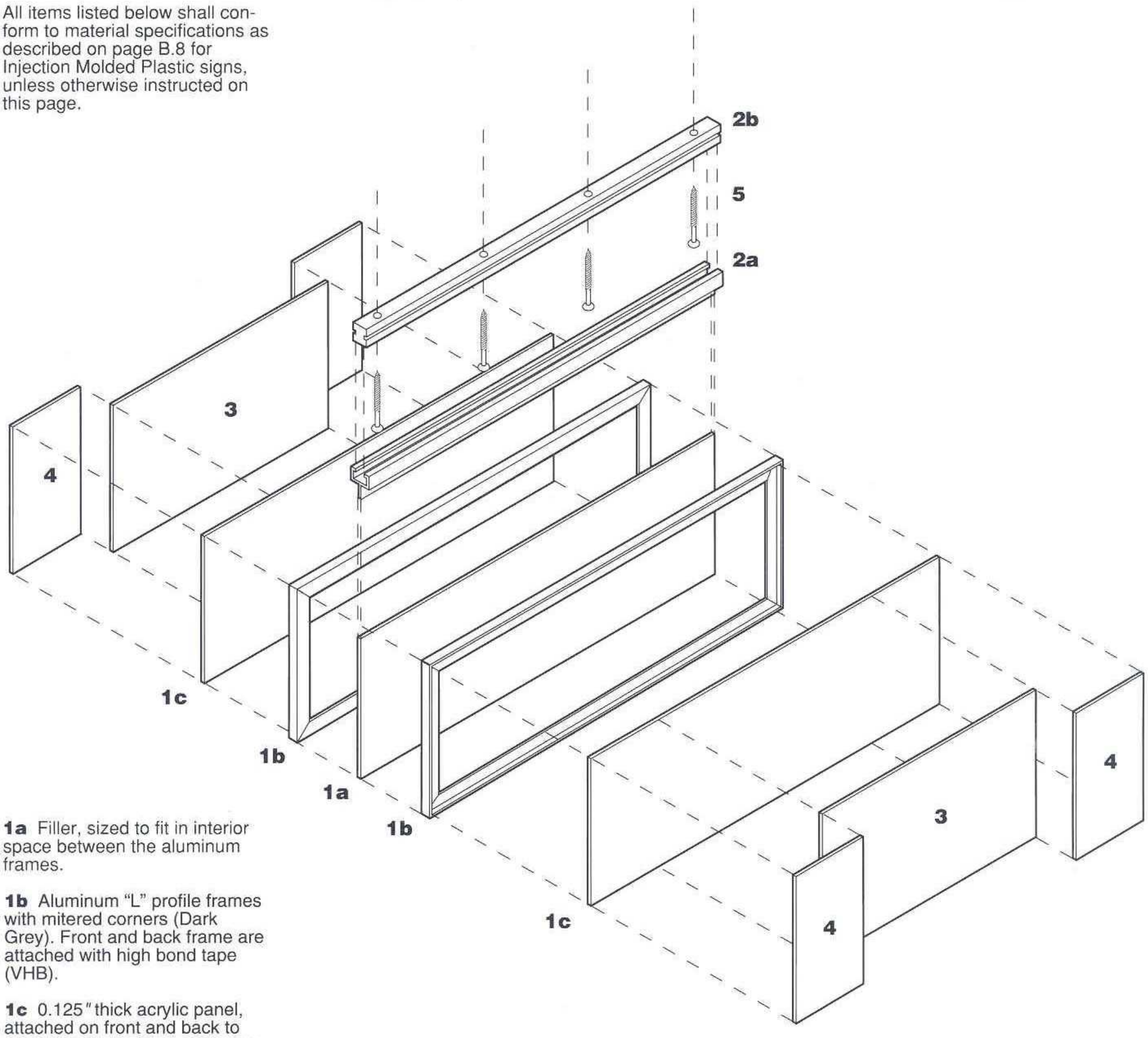

1a Filler, sized to fit in interior space between the aluminum frames.

1b Aluminum "L" profile frames with mitered corners (Dark Grey). Front and back frame are attached with high bond tape (VHB).

1c 0.125" thick acrylic panel, attached on front and back to filler panel and aluminum frame.

2a IM Track system (CM), permanently attached to frame (1b).

2b Receiving IM Track system, attached to ceiling tile or frame.

3 Sign panel insert (12" x 18"), attached to the acrylic panel frame with magnetic strips.

4 End insert panel, attached permanently to the acrylic panel frame as required to flush out spans longer than multiples of 18" panels.

5 Track attachment hardware varies depending on mounting surface. See page B.8-5 for mounting details.

Note: Overall length of frame depends on local conditions.

All items listed below shall conform to material specifications as described on page B.8 for Injection Molded Plastic signs, unless otherwise instructed on this page.

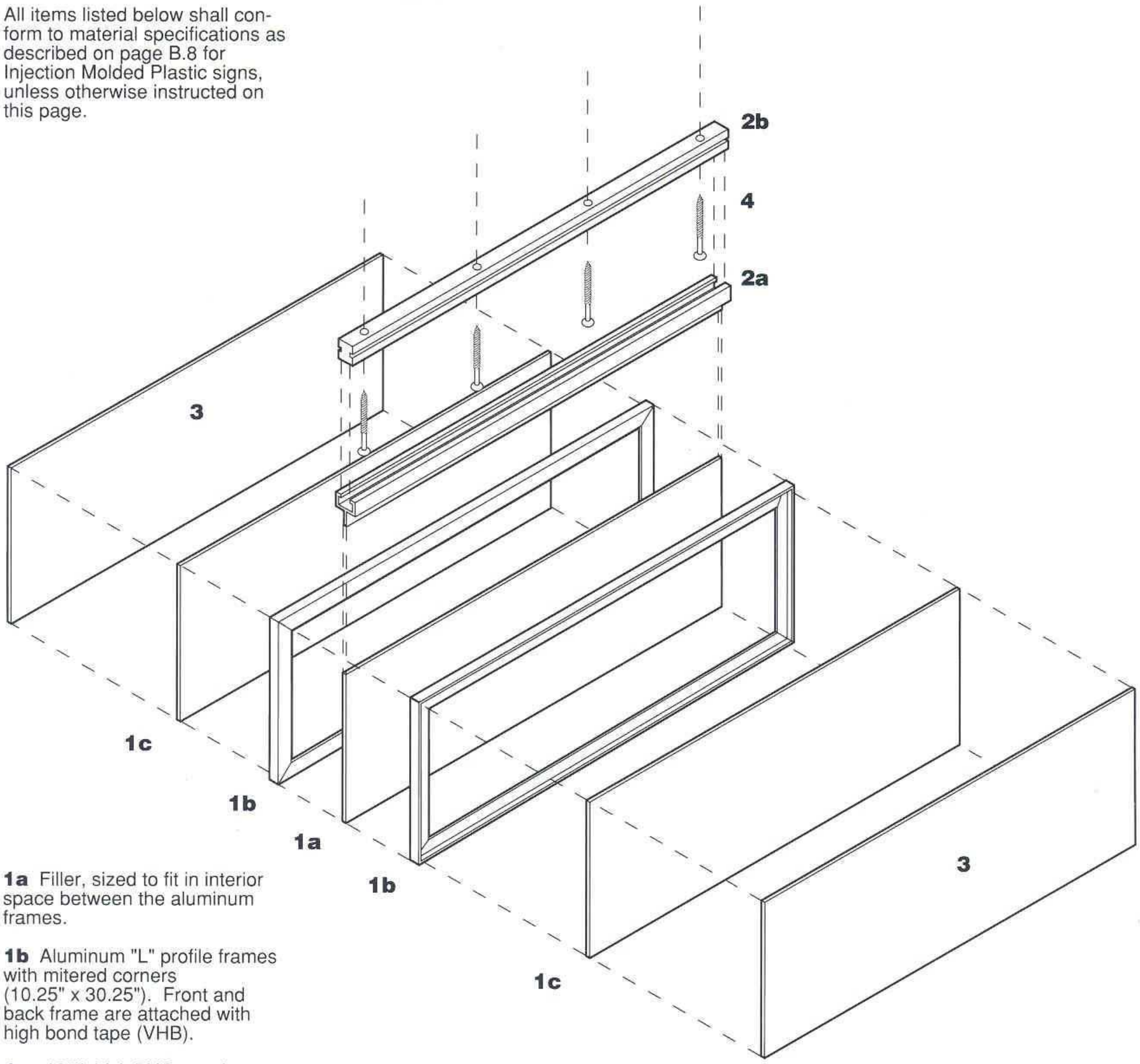

1a Filler, sized to fit in interior space between the aluminum frames.

1b Aluminum "L" profile frames with mitered corners (10.25" x 30.25"). Front and back frame are attached with high bond tape (VHB).

1c .125" thick PVC panel, attached on front and back to filler panel and aluminum frame.

2a IM Track system (CM), permanently attached to frame (1b).

2b Receiving IM Track system, attached to ceiling tile or frame.

3 Sign panel insert (10" x 30"), attached to the acrylic panel frame with magnetic strips.

4 Track attachment hardware varies depending on mounting surface. See page B.8-5 for mounting details.

IM System Wall-Mounting

1 Injection molded plastic frame

2 Sign panel insert

3 Vinyl tape (VT), for semi-permanent fastening

4 Mechanical fastener (MFH), for permanent and rigid mounting

5 Pinlock (PIN), for attachment to fabric on dividing walls and office systems

6 Clear acrylic panel clip (PC), for mounting on top of a dividing wall

7 Velcro (VC), for attachment to Velcro receiving tape or fabric wall covering

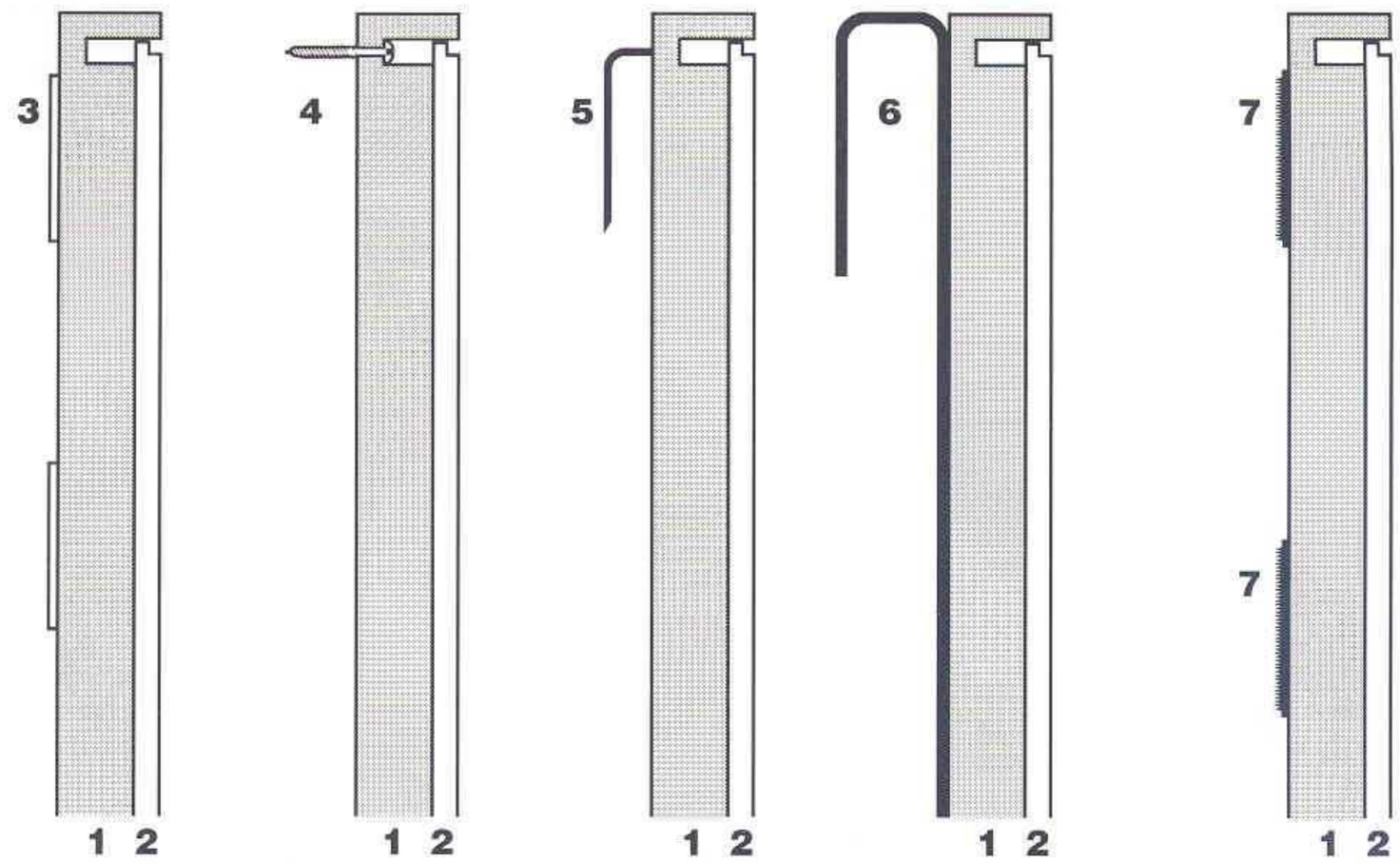

IM System Track Mounting

Track mounting on existing "T" bracket of ceiling frame.

1 Suspended ceiling "T" bar

2 Sheet metal screw

3 Ceiling tile

4 IM Track system

5 Sign panel insert

6 Acrylic panel frame

7 Aluminum extrusion

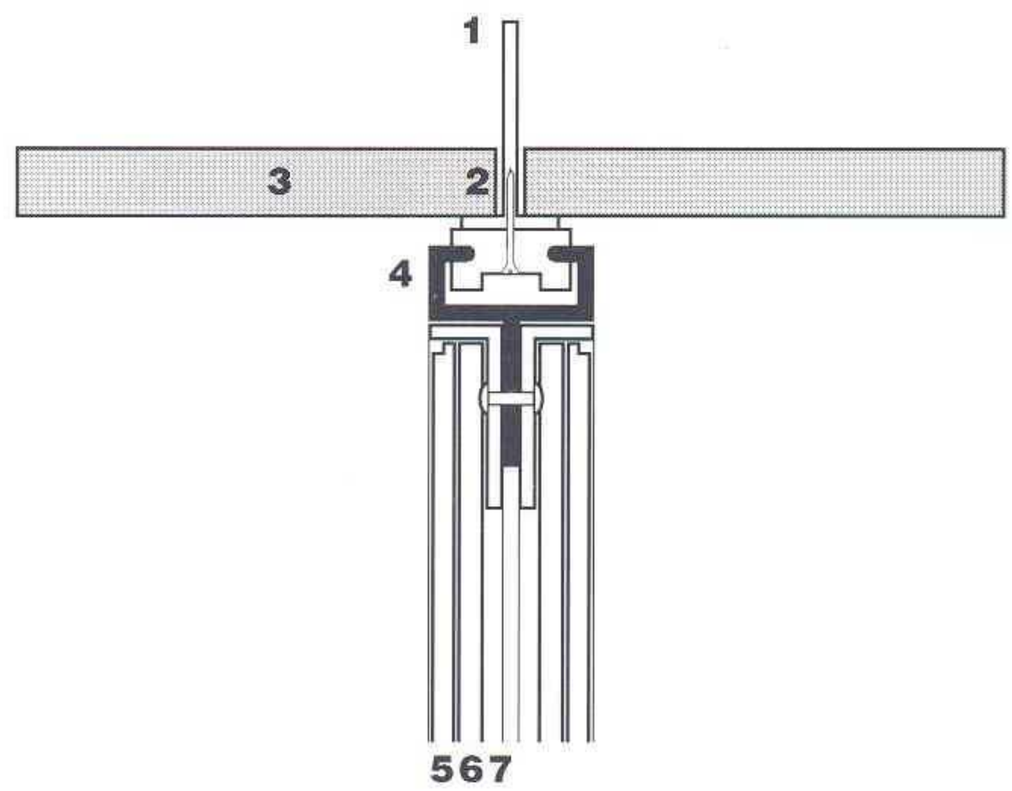

Track mounting on existing ceiling tile with use of angle spanning "T" brackets.

1 Suspended ceiling "T" bar

2 Ceiling tile

3 IM Track system

4 Aluminum extrusion

5 Bolt

6 Nut and washer

7 Angle to span ceiling "T" brackets

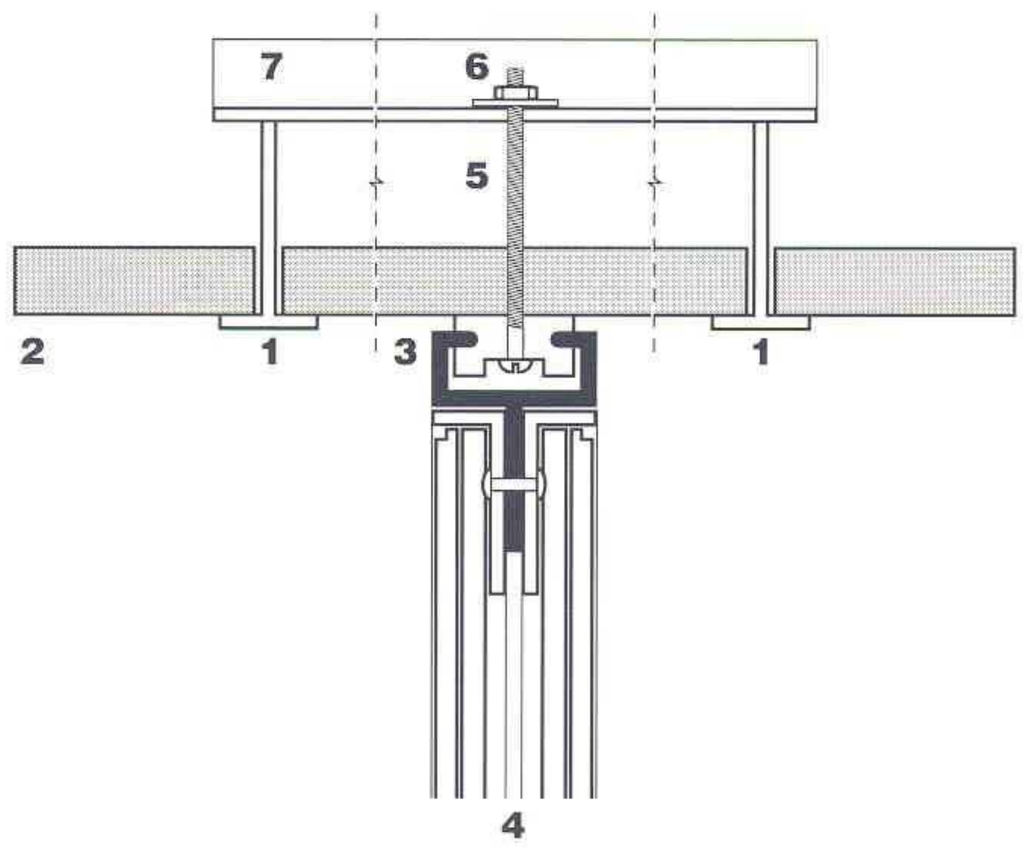

IM System Wall-Mounting

1 Injection molded plastic frame

2 Sign panel insert

3 Vinyl tape (VT), for semi-permanent fastening

4 Mechanical fastener (MFH), for permanent and rigid mounting

5 Pinlock (PIN), for attachment to fabric on dividing walls and office systems

6 Clear acrylic panel clip (PC), for mounting on top of a dividing wall

7 Velcro (VC), for attachment to Velcro receiving tape or fabric wall covering

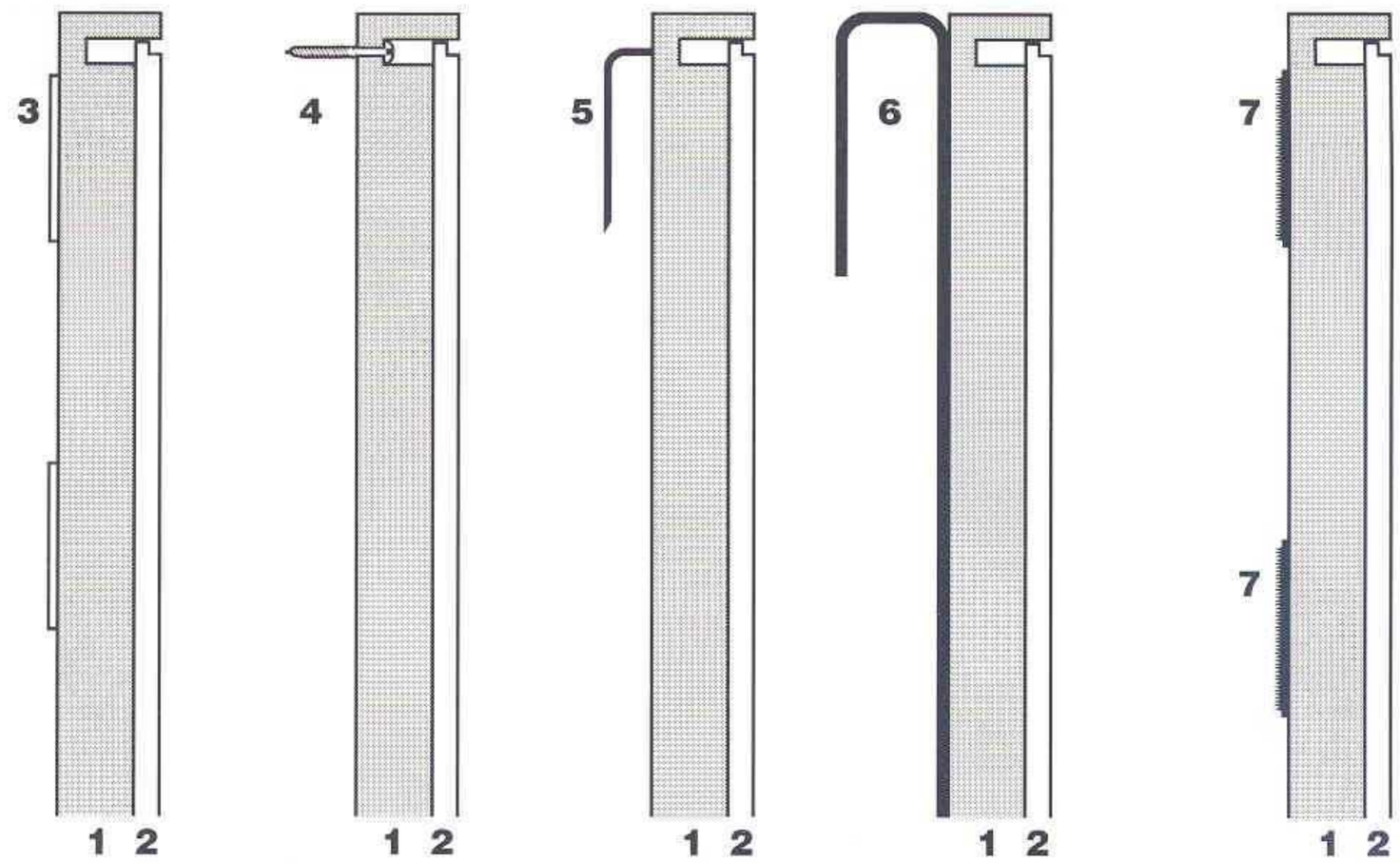

IM System Track Mounting

Track mounting on existing "T" bracket of ceiling frame.

1 Suspended ceiling "T" bar

2 Sheet metal screw

3 Ceiling tile

4 IM Track system

5 Sign panel insert

6 Acrylic panel frame

7 Aluminum extrusion

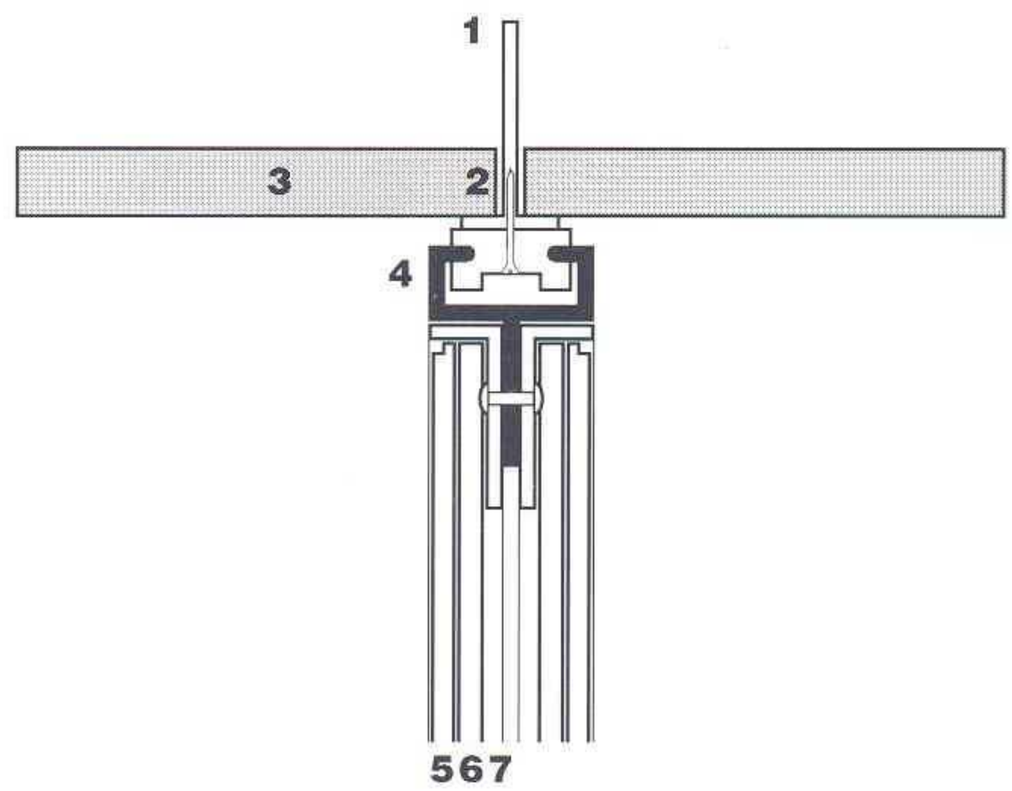

Track mounting on existing ceiling tile with use of angle spanning "T" brackets.

1 Suspended ceiling "T" bar

2 Ceiling tile

3 IM Track system

4 Aluminum extrusion

5 Bolt

6 Nut and washer

7 Angle to span ceiling "T" brackets

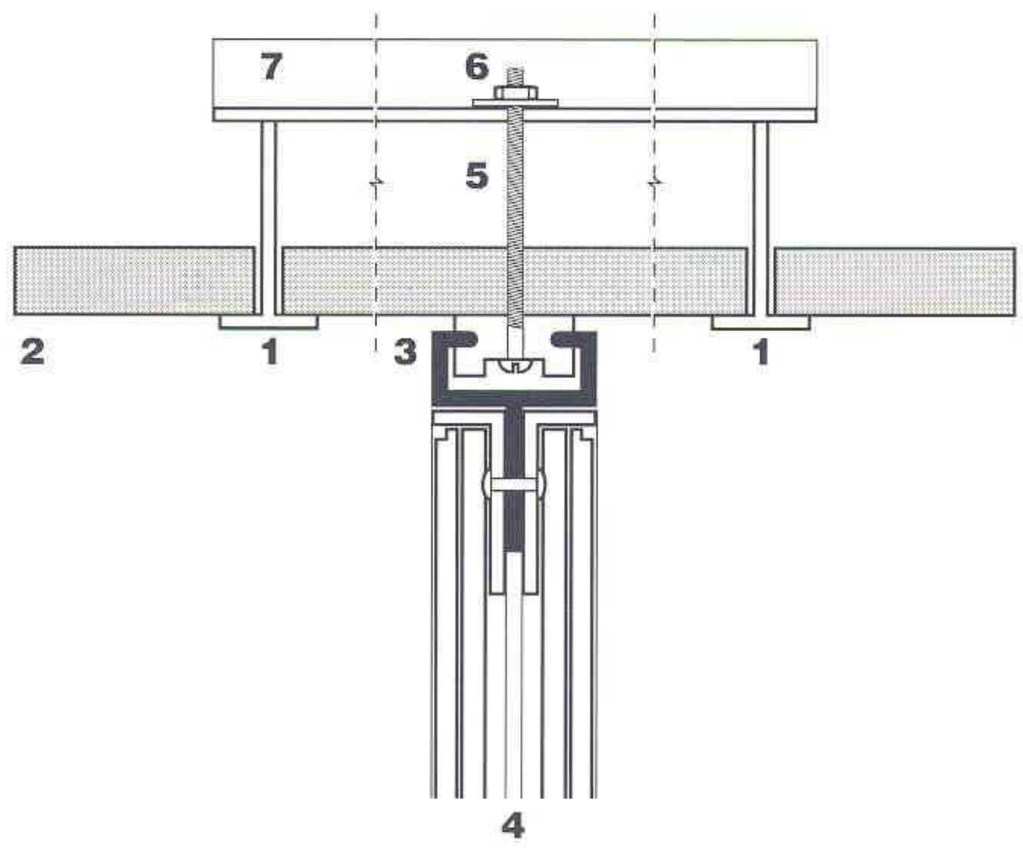

1. Materials

1.1 Signs

Ceiling Suspended Module shall be constructed of one-piece seamless fiber-reinforced polyester (FRP) consisting of initial gelcoat sealing layer with multi-layers of thermoset polyester resin and glass fiber strands molded to maintain module configuration to 0.125" minimum thickness with 3/16" radius on all edges.

Modules shall be internally reinforced with an encapsulated impact-resistant polyurethane or polyester core to eliminate oil-canning, surface deflection and warping.

The suspended module shall meet the fire resistance standards per ASTM and Underwriters Laboratories specifications.

Suspend Lay-in module in ceiling frame; no fasteners or mounting hardware of any kind shall be used.

Use of clear overcoat or surface applications is strictly prohibited.

Module Down Light (optional) shall be a translucent directed lighting aperture inside the module as manufactured by APCO Graphics, or approved equal. Aperture shall allow for a 60% nominal passing of light through the diffuser. Existing 2' x 2' light fixtures may be used for illumination, with no additional lighting required.

2. Graphics

2.1 Coatings

All graphics shall comply to the standards and specifications as described under "General Conditions", page B.2-B.2a.

Non-Illuminated Graphics shall be applied to the sign face in such a way to provide integral, vandal-resistant graphics.

Illuminated Graphics shall be applied to the translucent fiberglass sign face using a graphic mask and applying the background color to the exposed surfaces.

Inks shall be abrasion resistant non-glare, "eggshell" or opaque semi-matte, and shall form a permanent chemical bond with the substrate. Inks shall be compatible to the substrate.

Paint shall be compatible to material to which it is applied, and shall be guaranteed not to cause discoloration, deterioration or delamination for any reason, including exposure to heat.

Finish thickness shall be a minimum of 2 mils.

All painted surfaces shall have a smooth, even finish and be free of imperfections, marks, scratches, dirt embedments, wave patterns and other irregularities.

Paint shall be applied using a high-pressure spray in dust-free conditions and shall be thoroughly dried before being moved or assembled.

All colors shall be reproduced exactly as specified in Section 4 of the Sign Standards Manual.

Paint room facilities shall be well ventilated, dust-free and enclosed. Air temperature shall not be less than 65 degrees Fahrenheit during application of paint.

All items listed below shall conform to material specifications as described on page B.9 for Fiber Reinforced Polyester signs, unless otherwise instructed on this page.

1a Molded Module (FRP–01), (24" x 24" x 12") custom integral color, see Section 4. Graphics are integral to the sign face and opaque.

1b Molded Module FRP-02), (24" x 24" x 12") custom integral color, see section 4. Graphics are integral to the sign face and translucent.

2a Translucent diffuser for internally illuminated signs.

2b Down light for illumination of the area directly below the module (FRP-03).

3 Existing lay-in ceiling tile.

4 Existing suspension system.

5 Refit existing light fixture if an illuminated module is required (optional).

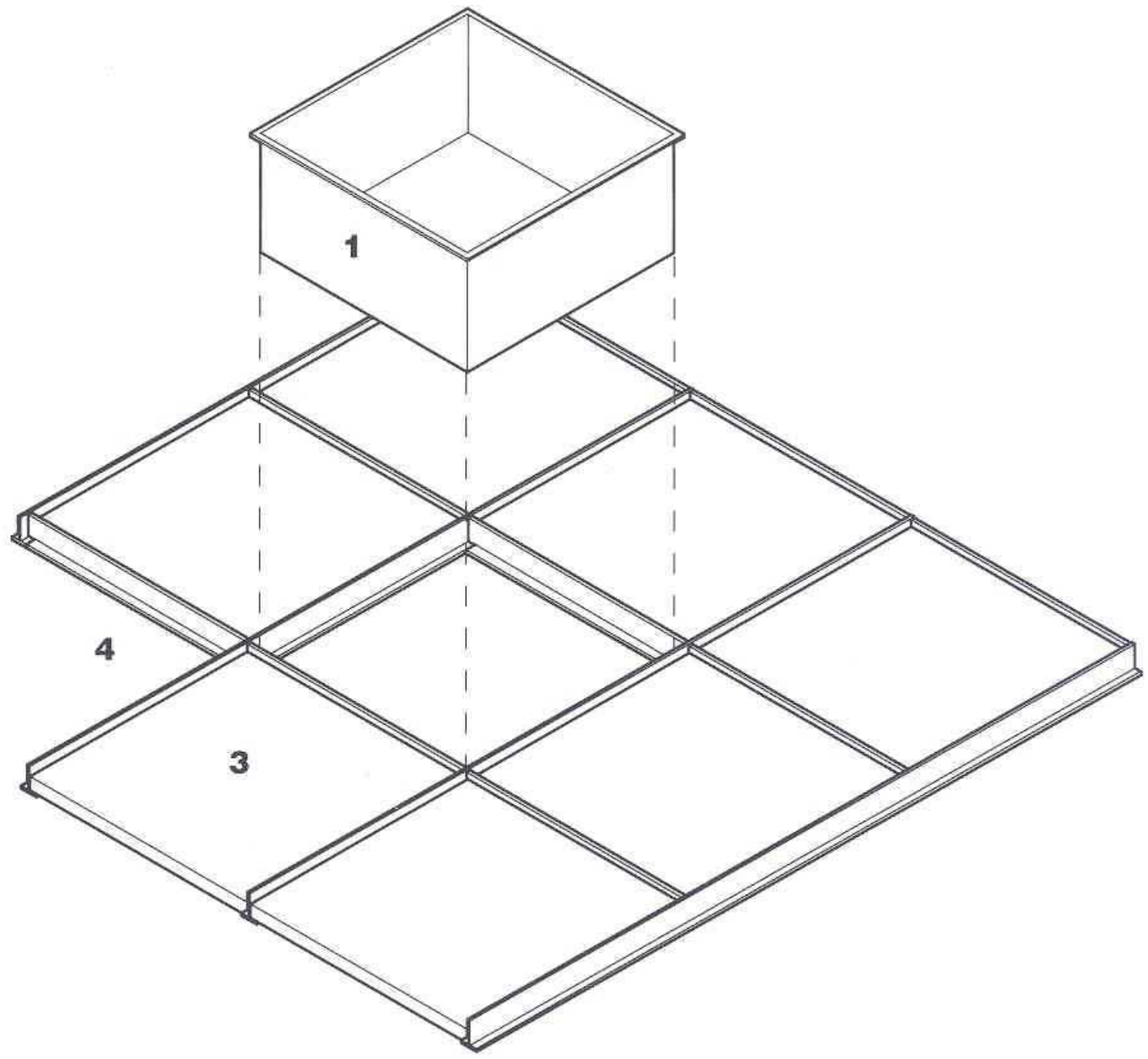

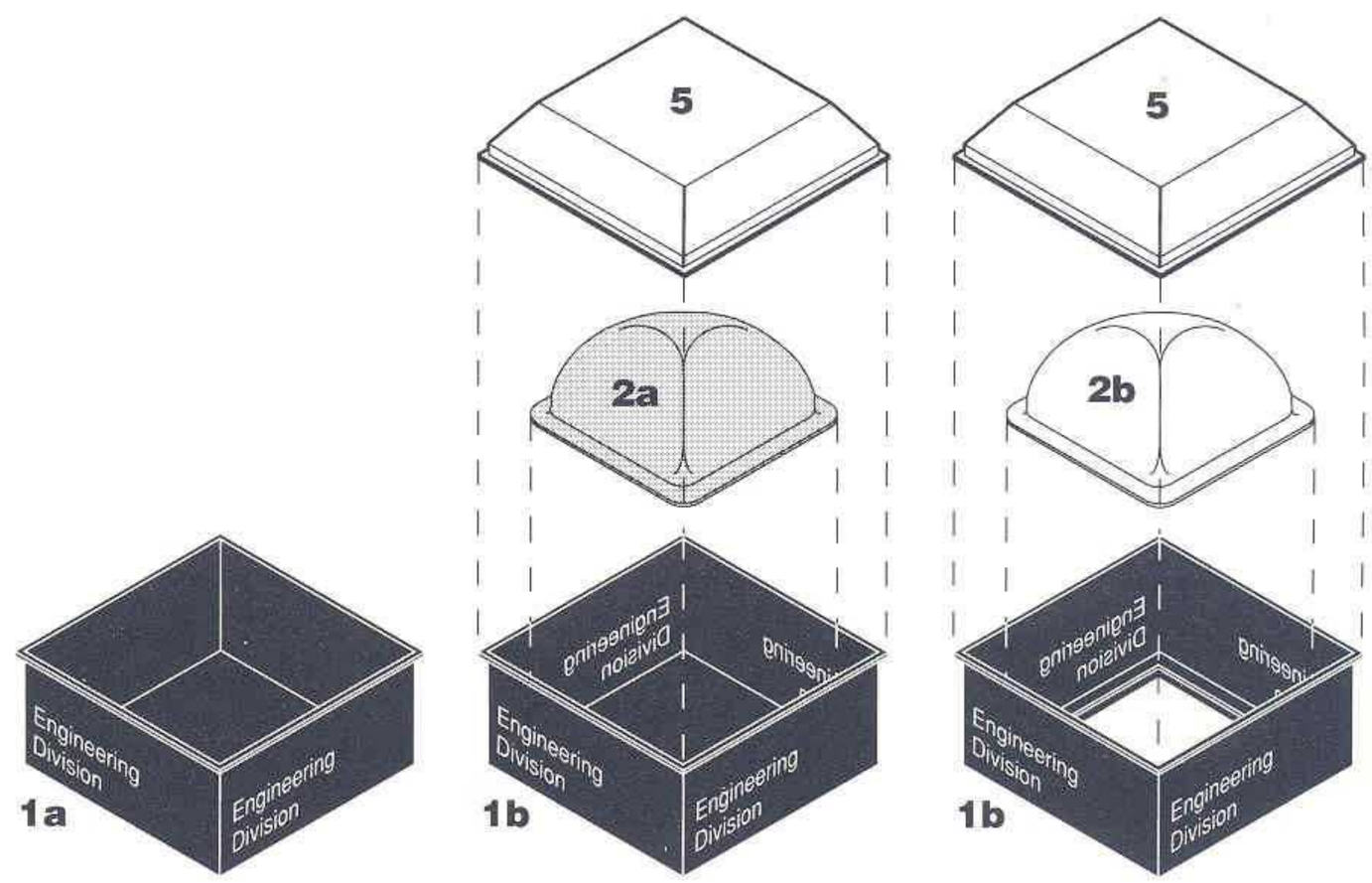

1. Materials

1.1 Signs

Porcelain enamel shall be a substantially vitreous, or glassy, inorganic coating bonded to steel by fusion at temperatures above 1500 Fahrenheit. Not to be confused with baked paints or organic enamels.

Steel panel shall be special purpose "vitreous or enameling iron or steel" as defined by ASTM A424 Type 1 and tensioned leveled and especially manufactured for the purpose of porcelain enameling with total additions of copper and aluminum no greater than .002. Supplier shall provide documentation of use of this material for project herein. Gauges of base metal as required to meet the tolerances specified but not less than 18 gauge.

Panels of one meter or greater shall be flat within 5 mm over all directions across the convex surface. Panels shall be flat within 1 mm over the concave surface in all directions. Panels shall not be more than 2 mm out of square when measured over the diagonal in total surface area of over 9 square feet and within 1 mm of the diagonal in panel under 1 meter of surface area. Deviations shall be measured with the aid of an accurate steel tape and straight edge.

All welds shall be clean, sound and solid, free from defects, gas bubbles, and ground and sanded smooth to 3/16" to match the 3/16" radii of the mechanical break. They shall be done using hand oxyacetylene fusion technique with no additions of foreign metals.

All necessary holes and cutouts shall be drilled or punched and welded in advance of enameling.

All work done shall be machine fabricated with straight lines, square corners or smooth bends, free from twists, kinks, warps, dents, and other imperfections which may affect appearance or serviceability. Curved sections shall be formed to smooth and even radii.

All metal forming shall be mechanical and done in advance of welding.

Panel Insert shall be High Density Overlaid plywood (HDO), 60-60 non-oiled resin impregnated fiber, black in color. All Douglas Fir exterior, marine-grade, to meet product standard PS1-83; or all exterior plywood PS1-83 group 1, with B grade veneers on both sides. Each panel should be edge-branded marine-grade HDO EXT PS1-83; or HDO B-B G I EXT PS1-83, 7 PLY.

Frits/Glaze/Oxide shall be specially formulated porcelain enamel frits, glazes and oxides as supplied by Ferro, Chivit, APEC, Pemco, Degussa or approved equal. These materials when combined and processed in final form shall be acid resistant in order to achieve an A or AA acid resistance rating.

2. Fabrication

2.1 Enameling Process

Porcelain Enamel Preparation shall consist of degreasing of all panels by immersion in an approved degreasing fluid. The panels shall then be rinsed.

After the first rinse, panels shall be sulfuric acid etched such that weight loss shall not be less than 35-40 G/M2. Surfaces shall then be rinsed again.

After the second rinse, surfaces shall be treated with a nickel deposit of not less than 20 G/M2 to substantially aid in the adherence of the glass to the steel.

After the third rinse, the chemical action shall be neutralized in a soda ash solution then dried rapidly.

Porcelain Enamel Ground Coat shall be applied to all areas of each unit, including backside, flanges and edges, by spraying methods recognized by Porcelain Enamel Institute. At least one additional separately fired cover-coating shall be applied to the face side, flanges and edges of each unit. For corrosion protection and flatness, one additional coating shall be applied to the back side of each panel and to be fired simultaneously with the finish coat for panels over 3 square feet in surface area. No exposed metal is acceptable.

Visual inspection of each unit shall reveal no visible breaks, gas bubbles, scumming, hairlines, stresslines or surface defects in the cover coat. No exposed metal is acceptable.

Ground and Covercoat Thickness shall be applied in accordance with Porcelain Enamel Institute recommendations to a thickness range between 0.004 to 0.020", as required by the manufacturer to suit the intended use.

The color and finish shall match a color sample previously submitted by supplier and approved by the Corps within 1 NBS unit. (1-2 NBS unit variation is barely perceptible to the human eye.)

Firing Source shall be a continuous furnace (not a batch type furnace) at temperatures above 1500 Fahrenheit.

3. Graphics

Porcelain enamel line art shall be screened over background colors. the quality of the screen image shall be of high resolution with no ragged edges. Line art shall be screened over background colors, so that characters are not obscured by the application of color. These specifications will be indicated on tracing paper overlay. The quality of the screen image shall be high resolution with no ragged edges. The glasses used in this process shall be acid resistant. Screen mesh shall be between 250 and 305.

Screen Glazes (Glasses) used in the screening process shall be acid resistant and opaque. The glasses shall be corrosion-proof, UV proof, windproof, and vandal-resistant. All screen glasses must be mill to a 400 mesh particle size.

Supplier shall be proficient in the following imaging techniques and able to demonstrate capabilities to the designer: reproduction of photographs by halftone and continuous tone methods, including process color and duotones, as well as special imaging techniques including handtinting, stencil brushing, spraying textures and air brushing.

Supplier shall be able to match the entire range of colors as represented by the Pantone Matching Systems (PMS) and Toyo Inks, as well as the color palettes of major paint companies.

All items listed below shall conform to material specifications as described on page B.6 for Porcelain Enamel signs, unless otherwise instructed on this page.

1 Porcelain panel with 0.75" return, to be laminated to panel insert with weather and moisture resistant silicone rubber adhesive.

2 0.75" plywood panel insert, to be secured to surface using appropriate hardware. Insert to be 0.25" smaller in length and height than the outside dimension of the porcelain panel.

NOTE: First secure the plywood insert to the surface. Then cover the inside of the porcelain panel with silicone adhesive and attach the panel to the plywood insert. This will secure the panel in place and cover any hardware to make the installation vandal resistant.

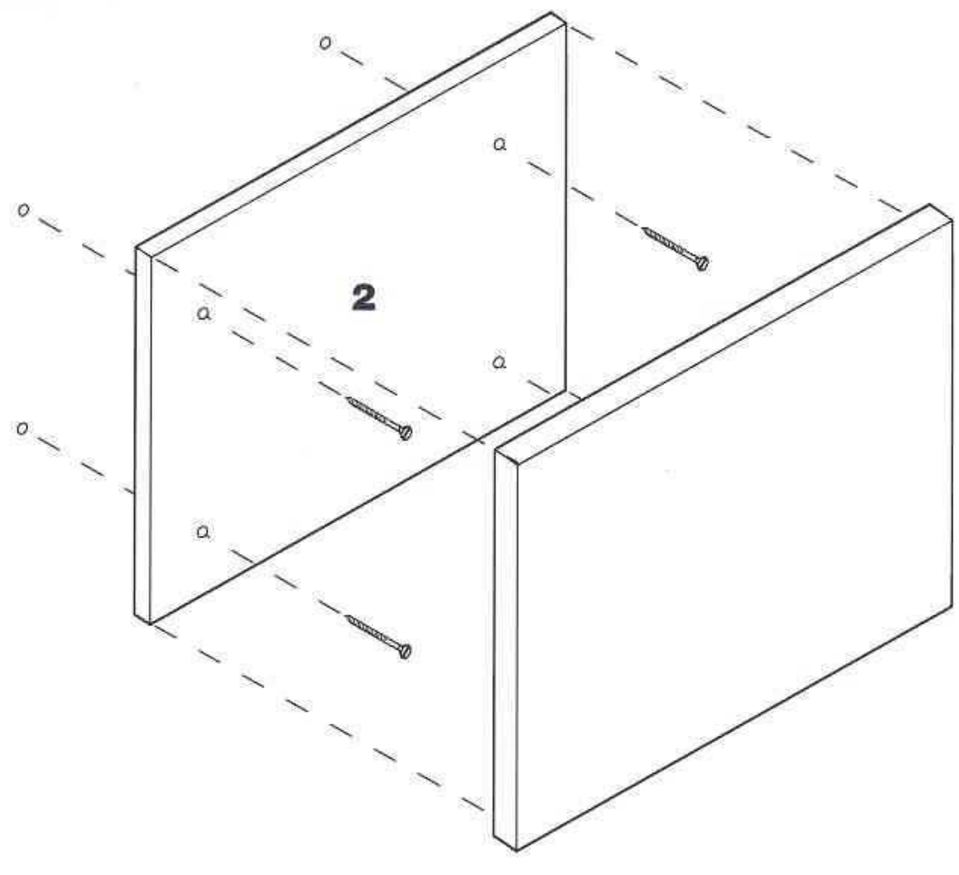

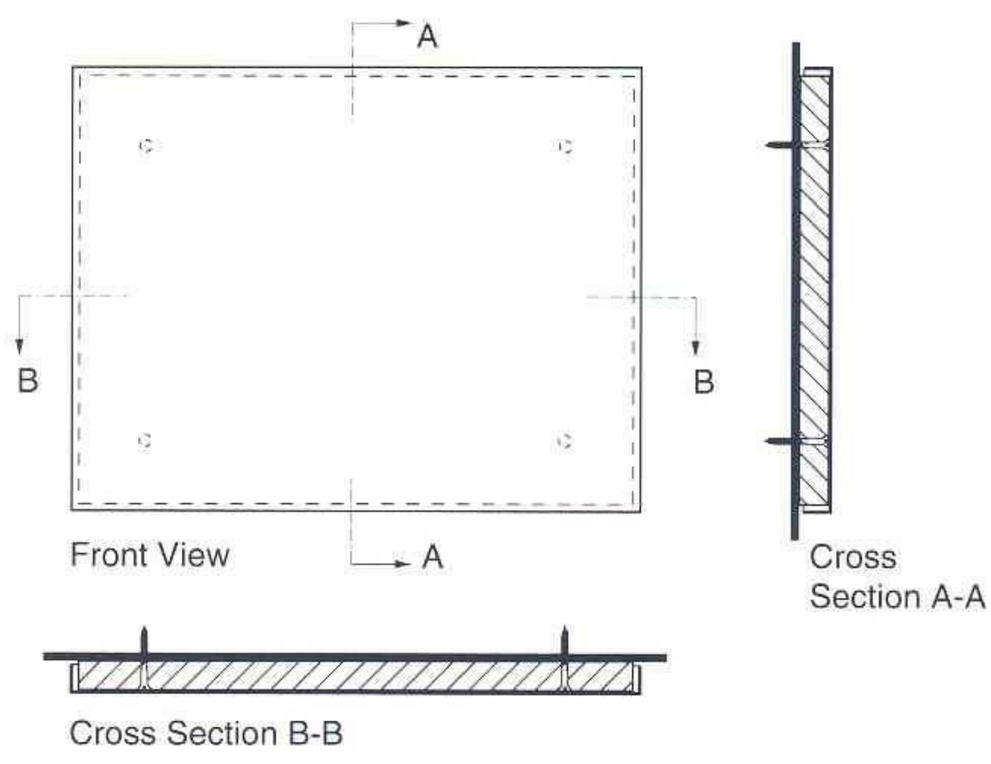

1. Material

Flexible and rigid post shall be a single piece, lightweight non-metallic post manufactured from a thermalsetting composite of marble, thermosetting polymers, and glass fibers. This shall be a durable, UV resistant, impact resistant, non-metallic , virgin polymeric materials designed for a minimum of 60 months outdoor service life. Re-processed polymers shall not be permitted. The stake shall be pigmented throughout the entire cross-section so as to produce a uniform, fade resistant color which is an integral part of the material.

Exterior surface shall not be subject to crazing, fiber-bloom, or related exterior surface deterioration or any other condition that may effect the integrity of the product or graphics applied to it.

Fabrication of stakes shall exhibit good workmanship and shall be free of any surface imperfections including cracks, bulges, discoloration, or inconsistencies in surface integrity.

Manufacturer code number and the month and year of fabrication for tracking compliance and durability shall be permanently attached to the rear of the post. This marking, using 0.25" letters shall include a two-digit manufacturers code with month/year fabricated (XX-00/90). Manufacturers name and or logotype shall not appear on the stake.

Length of the stake shall be of such length as to provide a minimum of 18" burial depth. Height above grade is to be no less than 36". If local conditions dictate, installations may be taller, but no higher than 48" above grade.

A black line shall be stamped horizontally across the front of the post near the bottom to indicate the recommended burial depth.

Embedment end of the post shall be factory cut with pointed end for ease of installation.

Field installation requires use of driver tool to keep post straight and rigid while installing, and to prevent damage to the top of the stake. Upon installation, the stakes shall be resistant to overturning, twisting or displacement from wind.

Flexible post shall retain mechanical properties a minimum of 80% for a minimum of 60 months of actual field exposure. The ultimate tensile strength and elongation (ASTM-638) shall be a minimum of 80% of the standard strength (73.4° F) when tested at 140°F and 40°F. The stake shall be capable of self-erecting and remain functional after being subjected to a series of five head-on impacts by a typical passenger car at 30 mph.

2. Graphics

Substrate of decal shall consist of either cast vinyl or acrylic urethane retro-reflective sheeting which has been silkscreened with UV-stabilized inks for outdoor applications. A clear UV resistant over-laminating film shall be applied to the decal for long term ultraviolet and abrasion protection. The minimum total decal thickness with adhesive and UV covering shall not be less than 4 mils for vinyl decals and 6 mils for retro-reflective decals. Clear coating shall not be allowed as a substitute for application of this covering. Adhesive shall have a high tack, aggressive, permanent pre-applied layer of pressure-sensitive adhesive, protected by a removable release film.

Screen printing shall precisely match the artwork, with even coating across printed area and no uneven reproduction of graphic images.

Encapsulated Graphics (alternate) in composite stake made by a pultrusion process with the sign panel graphic encapsulated within the resin binder of the stake instead of surface applied (non-reflective). The sign panel graphic is beneath the surface of the stake and is not directly exposed to weathering, scratching, or related surface abrasion.

Weather Resistant Decals shall exhibit negligible color change, legend fading, or blistering following five years exterior Southern exposure. Decals and integrity of factory applied adhesive marking to have a minimum seven (7) years life without edge release, cracking, or related surface deterioration. Thermal stability of decal shall not be affected over a temperature service range of -40°F to 140°F.

Artwork shall match reproduction artwork provided exactly. A pre-production sample shall be submitted to the National Sign Program Manager for approval before production. Approved sample shall be the standard to which all subsequent graphics are judged. No deviation from this standard is allowed. All property markers shall have local addresses permanently applied as per graphic standards specified in Section 10.

Application of adhesive graphics to sign materials. Ambient air temperature to be no lower than 60°F, and shall be factory applied (not field applied or applied by a re-seller or subcontractor) to the stake following proper preparation of surface as prescribed by manufacturer of pressure sensitive retro-reflective materials.

All items listed below shall conform to material specifications as described on page B.11 for Flexible Sign Markers, unless otherwise instructed on this page.

1 Retro-reflective panel, positioned with equal space to the left, right, and top of the post. Multiple panels shall have the same spacing individually

2 4" wide flexible double faced post (Carsonite CIB-380R, CSS-375R, or 250-R, or equal). Used for boundary and wildlife management area markers with small format (3" x 4.4") or large format (book spine 3" x 22") graphics, and campsite identification markers.This "I" beam construction is capable of withstanding repeated knock-down impact from moving cars.

3 2.625" wide rigid single face post, used for boundary and wildlife management area identifiers with small format graphics (2.5" x 3.66").

NOTE: Two kinds of posts are available: a fexible (item 2) and a rigid (item 3) post. Campsite identifications are available with flexible posts only. Wildlife management and property markers are available in both styles. If legibility is an issue, use the flexible post since a rigid post will require smaller graphics.

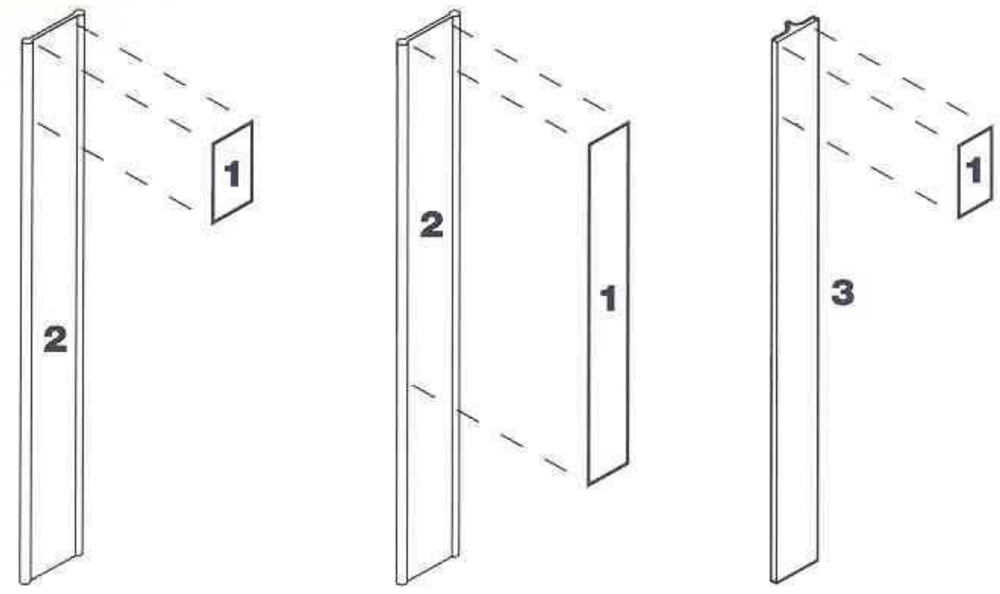

Exploded Views

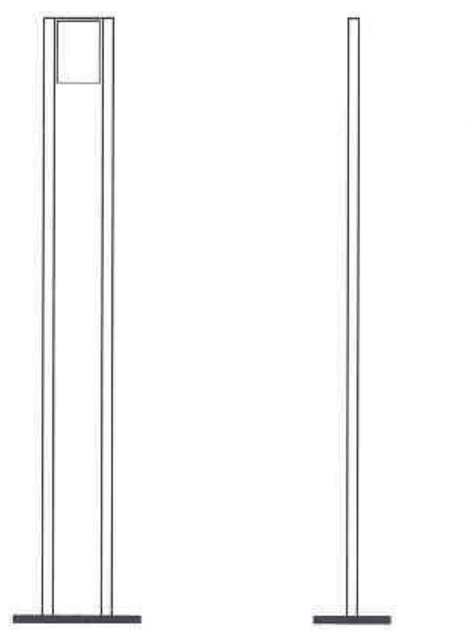

FrontView Side View

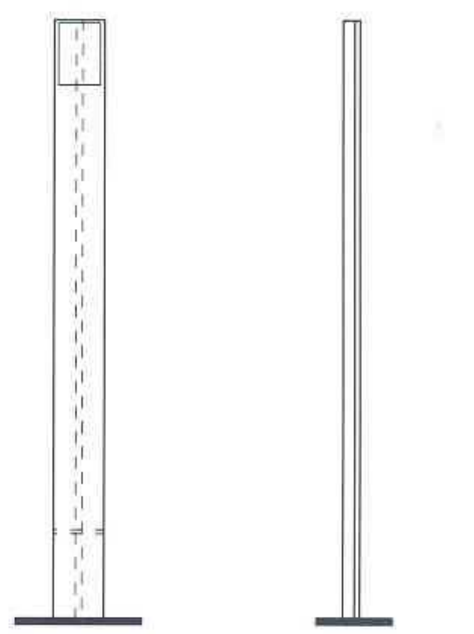

FrontView Side View

Plan

Plan

1. Materials

1.1 Signs

Letterforms and Castle logo shall be fabricated from Aluminum 6061-T6 alloy as per ASTM B209, to meet or exceed standards as specified in FP-85 Section 719.03. Surface shall be commercially flat and free of buckles, warps, dents, cockles, burrs and any fabrication defects. Panel thickness shall depend on total square footage of surface and maximum dimension.

Dimensions shall have a tolerance of ± 0.125″.

Joining shall be permitted only for panels larger than 900 square inches, or with dimensions greater than 30″. Such panels shall require reinforcement using a metal framework. Large panels requiring joining shall be butt jointed with screwed and welded spline on the back of the panel. Screws shall be flat head counter sunk and attached from the front face.

1.2 Hardware

Large Letterform Attachment shall be individual threaded stainless steel rods, mechanically attached (and secured with adhesive) to the back.

Small Letterform Attachment shall be studs, to be inserted into pre-drilled receiving holes with silicone adhesive.

1.3 Fabrication

Welding shall be full penetration mig type, slag and splatter free, with minimum spacing of 1″ to 1-1/2″ depending on letter or pan size.

All seams to be filled with best quality automotive grade compounds and ground completely smooth.

Edges to be finished even and dimple free. All raw material surfaces shall be free of blemishes and corrosion.

1.4 Finishes

Finish Paint shall be Wyandotte Grip Guard acrylic urethane (or approved equal).

All surfaces to be painted shall be abraded using a dual action sander with 320 grit disc followed by a recommended cleansing solvent. Surfaces shall then be primer coated with spray equipment using a self-etching zinc chromate primer. Finish coat shall be free from runs, sags, overspray, wrinkling, streaking, spotting or any other variation in painted surface. All painted surfaces shall be consistent in appearance. No seams, grind marks, welds or other subsurface imperfections shall be allowed.

All paint finishes shall be applied in an enclosed dust free environment, preferably utilizing a commercial grade spray booth with dust filtration system.

2. Graphics

2.1 Reproduction

Corps Castle and borders shall be digitally cut to match artwork exactly. Cut graphics to be weeded and applied using application compatible film.

2.2 Retro-reflective sheeting

Sheeting shall be engineer grade, premium quality, wide angularity enclosed lens retro-reflective material to meet with pressure sensitive adhesive backing or exceed the standard of:

– General Services Administration, Federal Supply Service specification *L-S-300-C, Reflectively 1.*

– U.S. Department of Transportation, Federal Highway Administration, *Standard Specifications of Construction of Roads and Bridges on Federal Highway Projects,* current edition *FP-85 Sections 633.06 and 718.01.*

No more than twelve (12) months will have elapsed from date of purchase to the date of application.

Application to aluminum shall be as described by the manufacturer and approved by the designated representative of the Corps of Engineers.

Surfaces shall be cleaned with a solvent such as E.I. DuPont Prep-Sol Cleaning solvent 39195, XYLOL, VM & P naphtha or lacquer thinner.

Dry surface with a lint free cloth before solvent evaporates.

Freshly painted surfaces shall be dried one week prior to application of graphics. Air and application surface temperatures must be above 60 degrees fahrenheit.

All items listed below shall conform to material specifications as described on page B.12 for Individually Cut Letterforms, unless otherwise instructed on this page.

1 Primary Legend, 12″ high solid aluminum. Minimum 3 studs per letter.

2 Panel attachment hardware, 0.190 studs or better. Stud depth to be 1.75″ minimum. See detail below.

3 Corps Castle Mark panel, 16″ x 21″ solid aluminum. Minimum 4 studs per mark. Painted Corps Communications Red.

4 Signature, 3.5″ high solid aluminum. Minimum 2 studs per letter.

5 Corps Castle Mark, cut retro-reflective sheeting applied to the aluminum sign panel.

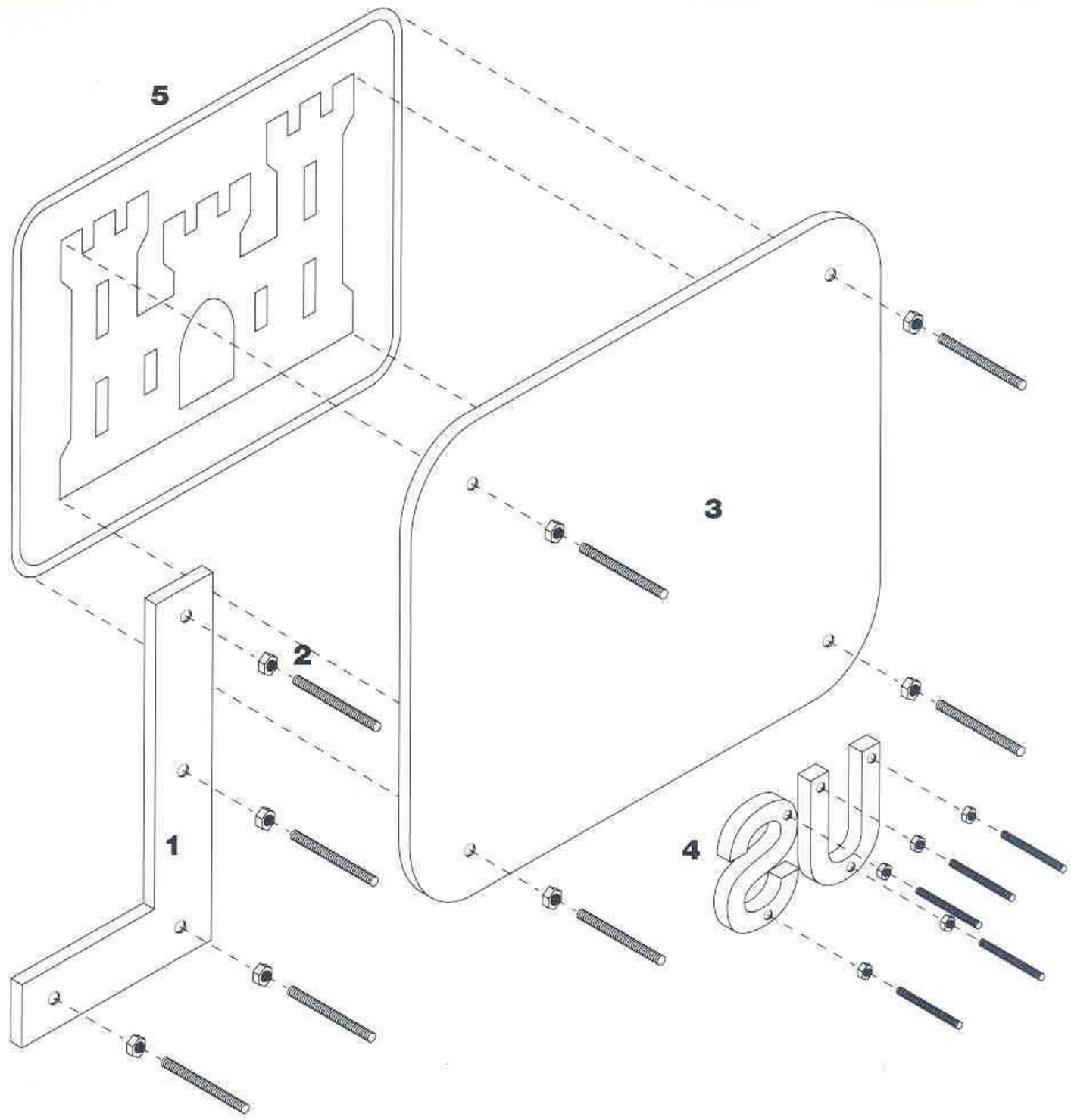

Detail panel attachment

A 0.125″ aluminum sheet

B Lock nut

C 0.190 stud or better. Stud depth to be 1.75″ minimum.

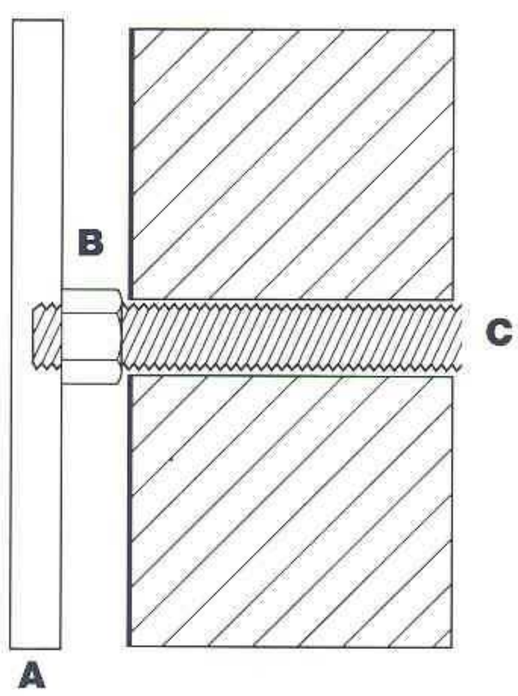

All items listed below shall conform to material specifications as described on page B.12 for Individually Cut Letterforms, unless otherwise instructed on this page.

1 Primary Legend, 0.125 sheet aluminum with 0.75" or 1" return. Minimum 3 studs per letter.

2a Panel attachment hardware, 0.250 studs or better. Stud depth shall be 1.75" minimum. See detail below.

2b Panel brackets, 0.125 sheet aluminum.

3 Corps Castle Mark, 0.125 sheet aluminum with 0.75" or 1" return. Minimum 4 studs per mark. Painted Corps Communications Red.

4 Signature, .090 sheet aluminum with 0.75" or 1" return. Minimum 2 studs per letter.

5 Corps Castle Mark, cut retro-reflective sheeting applied to the aluminum sign panel.

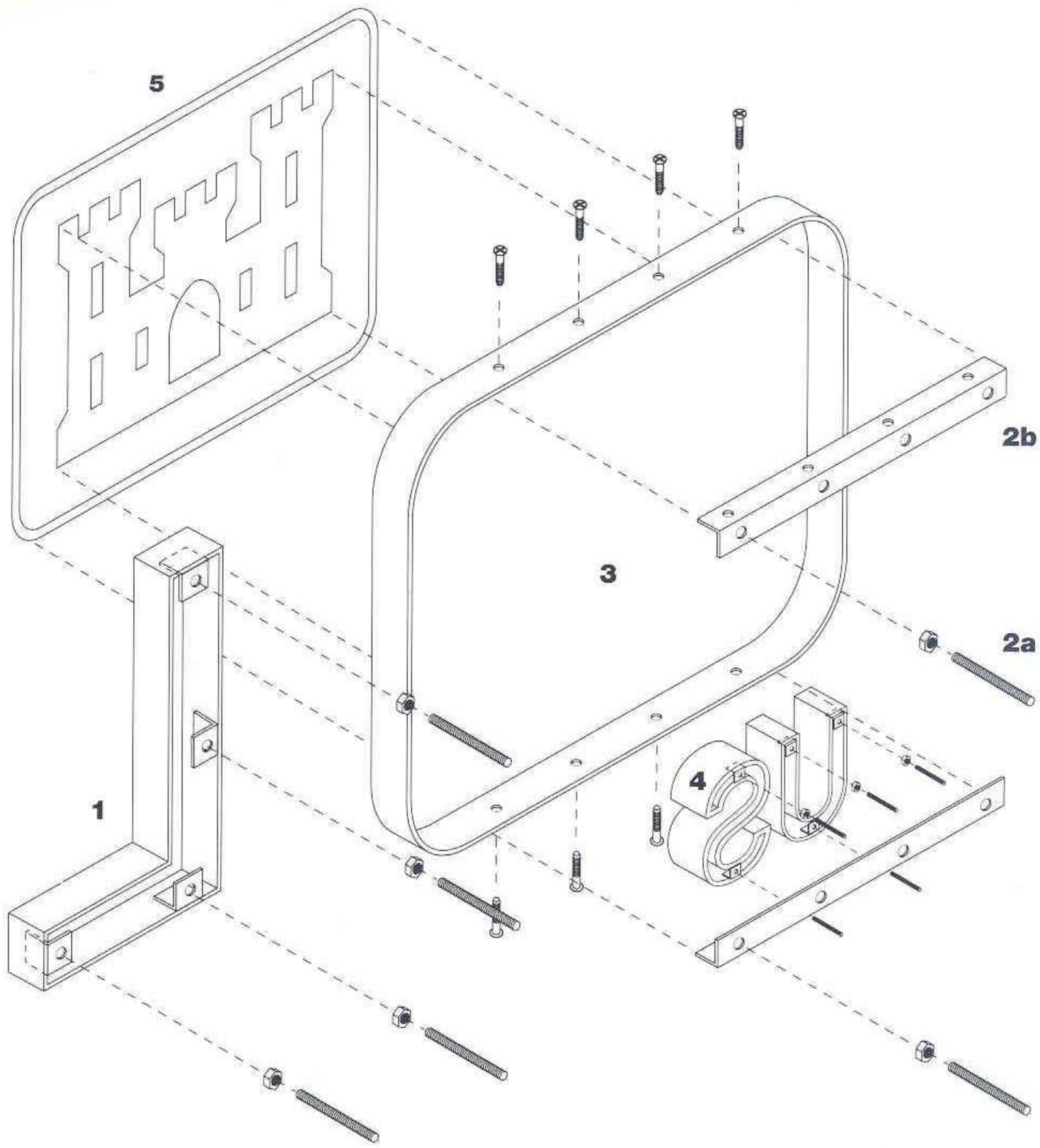

Legend Size (A)	Corps Mark Size	Signature Size	Panel Return
18"	24"x 31.5"	5.25"	0.75"
24"	32"x 42"	7"	1"

Detail panel attachment

A Aluminum sheet

B Lock nuts

C Stud

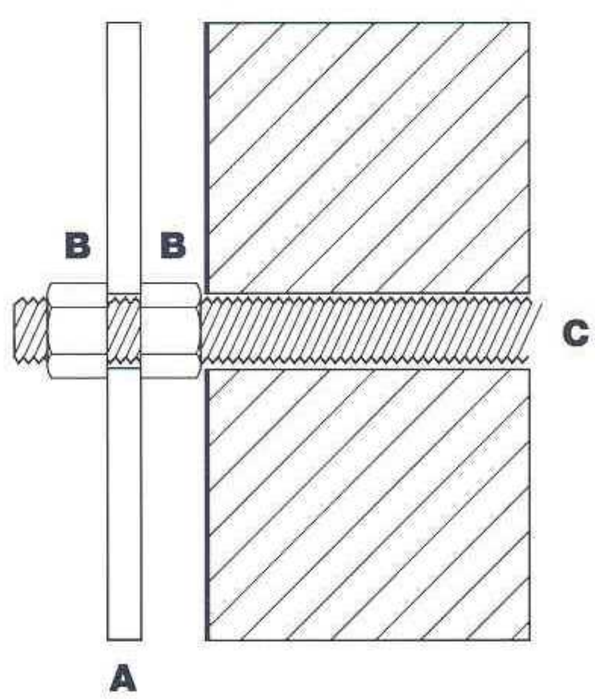

All items listed below shall conform to material specifications as described on page B.12 for Individually Cut Letterforms, unless otherwise instructed on this page.

1 Primary Legend, 0.190 sheet aluminum with 1.25", 1.5" or 2" return. Minimum 4 studs per letter.

2a Panel attachment hardware, .375 studs or better. Stud depth shall be 3" minimum. See detail below.

2b Panel brackets, 0.190 sheet aluminum.

3 Corps Castle Mark, 0.190 sheet aluminum with 1.25", 1.5" or 2" return. Minimum 6 studs per mark. Painted Corps Communications Red.

4 Signature, 0.090 sheet aluminum with 1.25", 1.5" or 2" return. Minimum 3 studs per letter.

5 Corps Castle Mark, cut retro-reflective sheeting applied to the aluminum sign panel.

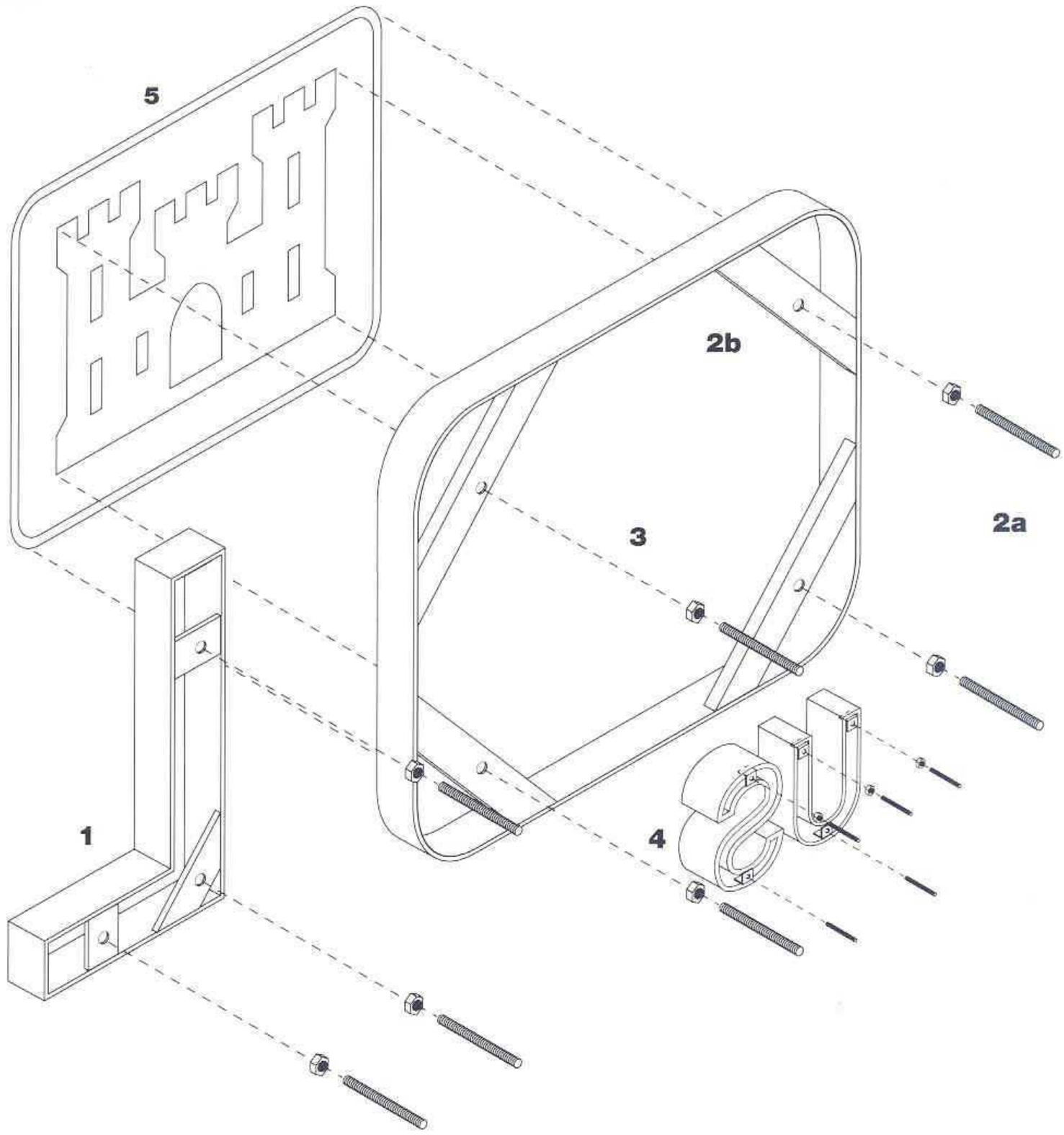

Legend Size (A)	Corps Mark Size	Signature Size	Panel return
30"	40" x 52.5"	8.75"	1.25"
36"	48" x 63"	10.5"	1.5"
48"	64" x 84"	14"	2"

Detail panel attachment

A Aluminum sheet or bracket

B Lock nuts

C Stud

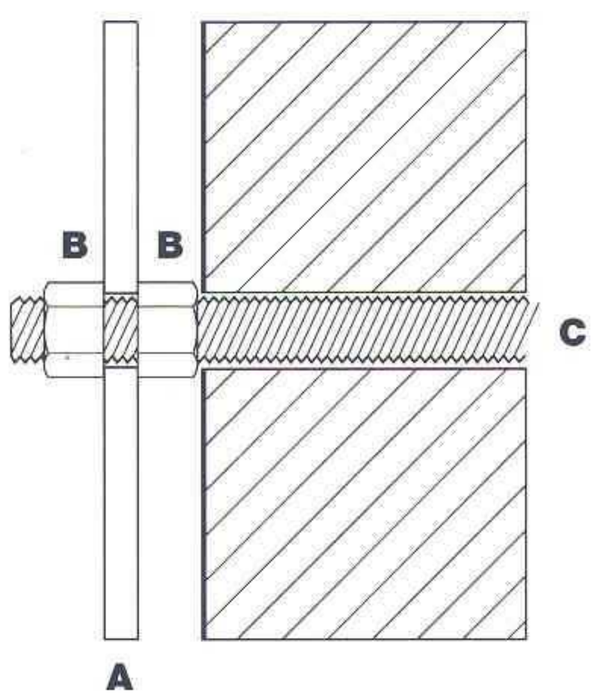

Introduction

The specification section for waterway signs has been divided into four parts:

- General program intent.
- Material descriptions and recommendations.
- Design intent drawings for the seven basic sign configurations.
- Engineered examples used as referential case studies for specific design concepts.

Since each sign or group of signs will need to be engineered on a site-by-site basis, this waterway section (B.13 through B.13-15) is presented as a design intent overview with reference materials to guide individuals preparing implementation plans. This reference material identifies the appropriate material and method of fabrication. The intent is that all signs are fabricated in modules for ease of field assembly, the design is basically weather resistant, and one design will, with modification, work for both small and large signs of similar type.

General

The design criteria for sign support structures are based on the fundamental laws of physics. The design intent when considering sign support structures is to enable the superimposed loads — dead load and live load — to be transmitted to the ground. In most cases, the dead load of the sign faces and the support thereof is minimal and can be neglected as being of a minor magnitude. In some cases, where the sign is "flagged", or cantilevered far out from the base structure, the dead load may become of consequence and enters into the design consideration.

Live loads arise from wind, ice and in some cases, seismic activity. The magnitude of the live loads is a function of geographic location and height above the ground. For wind load, the history of wind velocities in that location or geographic area, the nature of the terrain surrounding the sign location, the geometric configuration of the sign face(s), and the height of the sign area above local grade will all factor into the design of the structure. Ice buildup will depend on the location. Seismic forces, likewise, will be considered in accordance with the seismic activity zone where the sign is located. Generally, the component of live load which is of major magnitude is that arising from wind.

The live and dead loads are transmitted through a structural system from sign face to the ground fastening system. This latter may be in the form of anchor bolts into a concrete footing, direct burial of a beam-column into a concrete footing, or simply embedment of a beam-column into the subgrade or a pocket carved out of rock and subsequently concreted in place.

The sign face serves no purpose other than to convey information, either in the form of words in specific visual formats, alpha-numeric characters, referential color, graphic symbols, or other markings as appropriate.

In the material that follows, solutions for a number of sign configurations have been supplied, subject to a set of design criteria as noted. A change in one or more of the criteria will, of course, result in a different solution. Ultimately, the final configuration of the sign structure support system will depend on local conditions, size of sign face(s), structural components readily available, and the design purview of competent professionals.

For purposes of design, the following design criteria have been assumed.

- Design wind pressure: 30 psf
- Soil: 3 ksf min.
- Concrete: 3000 psi (28 days)
- Steel: A36 rolled steel sections and anchor bolts, and A500B/A36 tubes
- Steel welding electrodes: class E60/70
- Rebar: A615 grade 60
- Fastening hardware: stainless steel 302/304 (sign faces to supporting structures)
- Fastening structural sub-components: A325 galvanized bolts, nuts, and washers, etc.
- Aluminum: 6061-T6 plate (min 0.125"), 6061-T651 plate (0.250" and greater), angle and tubing(6061-T6).
- Galvanic isolation: silicone or bitumastic separator to negate corrosion.

An overview of these materials and design is provided on pages B.13a through B.13b.

Materials

Steel: A36 rolled steel for wide flange beams, base plates and angles provides a material which is most commonly stocked throughout the country and constitutes reduction of the fabrication of the structural elements to standard practice.

Steel: A500B tubing (TS) is the most common type material used for tubing, and is likewise most readily available. The A36 specification for tubing may be found in some locations, in which case it may serve as a substitute for the A500B material. The design of the sign supports is most often driven by the desire to keep the deflection within prescribed limits, and consequently, the yield strength of either A36 or A500B tubing material will serve equally well.

The designs using TS sections will prove more economical in many cases in as much as the TS sections are almost always classified as compact sections, and as such, there is often no requirement for cross-bracing members to be introduced between the upright posts. The design rationale will have to weigh the use of TS sections versus wide flange sections, each as a component of a structural system supporting angle rails. During the process, the specific design of the posts will indicate the need for bracing members. The ultimate solution will depend on factors such as the local availability of the alternate sections which may be suitable, in addition to the matter of fabrication cost comparing the structural builds with TS sections or wide flange sections. As sealed units, fabricated tubular structures have less surface area, thus reducing weather exposure and related maintenance problems.

Aluminum (6061-T6) alloy is recommended throughout for tubing, angles (L-rails). and sign panels with thickness up to 0.190". The dimensions of these structural elements will be dictated by the design computations.

Aluminum (6061-T651) alloy is recommended for sign panels with thickness of 0.250" and greater. The actual dimension of the sign panel and the other structural elements will be dictated by the design computations.

Protective coatings for steel members can be provided in several ways. The best from the viewpoint of long service life and minimal interim maintenance consists of hot-dip galvanizing the structural members. The lack of ready availability of the facilities to do the galvanizing may mitigate against this process.

Alternately, surface covering may consist of standard painting procedures (removal of deep pits, and surface oxidation — most often with the exception of tight mill scale — grease, dirt, etc.), and then the application of two coats of paint-typically a zinc chromate primer and an epoxy type finish coat. Shot blasting or sand blasting the surface of the steel members may be employed, but will add measurably to the front end cost. Likewise, if epoxy paints are employed over a properly prepared substrate, the resulting surface protection will be long-lived. As with all finishes, the final end product will suffer scratching and abrasion while in service. The hot-dip galvanized service is quite forgiving in this respect, but if the coverage of the galvanizing is not uniformly applied, the surface will have to be touched up with a suitable paint. There exist on the market several zinc rich compound materials which can be used to "paint" on a surface which will restore the protective cover of a damaged galvanized surface to a large degree.

Painted surface damage — for conventional paint procedures or with epoxy paints — can generally be repaired with application of like paint to the existing sound surface cover.

Poured in place concrete footings serve to fix the sign superstructure as well as provide a suitable counterweight to prevent the sign structure moving (or being blown over) by wind. In those cases where sufficient counterweight can be provided by existing concrete or stone, site inspection shall usually be required to determine the condition of the substrate material (concrete or stone) and, by extension, its suitability to sustain dead and live loads. Concrete to be cast in place is a ubiquitous material available everywhere. The 3000 psi 28-day strength is a common specification and readily available.

Direct embedment of steel posts is acceptable. Direct embedment of aluminum posts is not acceptable because of adverse chemical reaction between concrete and aluminum.

Base connections between base plate(s) and subgrade material — usually in the form of cast-in-place concrete footing(s) — is conventionally made via A36 galvanized steel anchor bolts, with suitable bends to anchor same in the poured concrete. Hot-dip galvanized anchor bolts will ensure a long life in place before attention needs to be paid to refurbish the protective coating on the anchorage. In those instances where the anchor bolts must be applied to an existing concrete base (or stone walls in lock construction), the widespread availability and proven long life and high capacity of embedded epoxy-bonded drilled anchor bolts makes this system unequaled for such applications. A number of manufacturers supply a complete line of these products throughout the country; it is rare not to have them available locally.

Materials
(continued)

Mechanical fasteners for steel/steel connections in the superstructure are preferably made with galvanized A325 bolts. These are widely used and are standard structural items, readily available. In those instances where this grade of bolt is not available in the galvanized form, the untreated material is used, with paint applied.

Fasteners used between sign panels and supporting structure must account for the problems encountered via galvanic action between dissimilar metals in contact in a moist/wet atmosphere. Accordingly, if at all possible, stainless steel hardware is preferred.

Bolted connections are made through pre-drilled holes in brackets and rails. Receiving holes may be oversized or slotted to allow for adjustment during field assembly. Pre-assemble all signs in the shop including panel, frame and post to verify alignments and eliminate the costly need for drilling or modification during final assembly in the field.

Aluminum welded studs when used to provide fastening between sign faces (aluminum sheet) and aluminum supporting rails, shall preferably have backup washers and nuts of stainless steel.

Faying surfaces between steel and aluminum shall be treated with a bitumastic material or commonly available adhesive silicone sealer to prevent galvanic action between the dissimilar materials, lengthening the service life of the structure.

Superstructure assembly can be made in the shop and transported as a whole to the site if the sign assembly is small enough to allow it. Otherwise, the subcomponents will be transported to the site and assembled there. Shop assembly, when possible, is preferred — transport availability and route conditions being favorable; site conditions and distance from the point of fabrication may dictate in this regard.

Sign faces are to be 0.125" aluminum unless otherwise specified. This sheet material is commonly available in this thickness, and has good physical properties for these applications. Indeed, the design of the superstructure elements supporting the sign faces (aluminum angles), has been driven by the desire to standardize the thickness of the face sheet at 0.125".

In those circumstances where the geometry of the sign face or the exposure of the sign require it, a thicker gauge material may be required. Also, in areas with a high incidence of vandalism or where support members may be damaged by natural forces, the sign face may have to be made of aluminum plate material 0.25" thick or more. The specific size of the sign, the design of the superstructure elements, and special environmental conditions will dictate the thickness of sign face material.

Sign face support system is predicated on there being a number of rails (vertical or horizontal), the rails themselves being continuous and fastened to the posts via intermediate angle brackets. There will be cases where the angle brackets themselves will take the form of a continuous angle (a wall mount on stone surfaces which may be rough tooled and thereby present no plane surface). In this case, then, the assemblage of two continuous angles toe- to-toe will effectively produce a fabricated "z" section. By and large, the bulk of the rail supports will take the form of angle brackets.

Sign posts and footings most commonly use anchor bolts cast in place in concrete, and subsequent emplacement of the posts with attached base plates.

There may be occasions when it may become desirable (and practical) to embed the sign posts directly into the excavation and pour the concrete around same. While attractive, this method will generally require that a falsework be built to retain the posts plumb and coplanar during the pour and the subsequent initial set and cure of the concrete. For small builds, this may be possible, but special attention must be paid to the detail in finishing the top of the concrete footing. A sloped concrete surface will be required in order that water will drain away from the posts, not toward them. Likewise, a well-tooled finish at the point of entry of the post into the concrete will assure a well bonded interface between concrete and post. These precautions are designed to mitigate against corrosive action taking place at the point of the post's highest stress.

Graphics
(continued)

1. The sign is ineffective for its intended purpose when viewed from a moving vessel under normal conditions of day and night navigation; or

2. Its coefficient of retro-reflection at -4/0.2 Ent./Obs. angles is less than 50% of its initially specified minimum.

In addition, the fluorescent Lemon Yellow shall demonstrate fluorescence as measured by maximum spectral radiance factor in accordance with ASTM E991 "Color Measurement of Fluorescent Specimens." By this measure the fluorescent Lemon Yellow material shall provide a maximum spectral radiance factor of not less than 110 percent when new. It shall also be warranted by the manufacturer to provide a maximum spectral radiance factor of not less than 60 percent after 5 years of service in normal, vertical exposures. Additionally, this color shall provide a Cap Y of at least 50 after the same period of exposure.

Furthermore, the sheeting shall provide 7 years of performance without deteriorating due to natural causes to the extent that:

1. The sign is ineffective for its intended purpose when viewed from a moving vessel under normal conditions of day and night navigation; or

2. Its coefficient of retro-reflection at -4/0.2 Ent./Obs. angles is less than 50% of its initially specified minimum.

Sheeting Manufacturers Replacement Obligation

If the above field performance criteria are not met the sheeting manufacturer shall cover sign restoration costs as follows.

If failure occurs in:

1 Year: Restore the signs' surface at no cost for materials or labor.

2-3 Years: Provide prorated replacement of sign face (in material) for sheeting, materials & labor.

4-7 Years: Provide prorated replacement of reflective materials only.

Cutting Requirements

Series 3970G Diamond Grade retro-reflective Sheeting is constructed from extremely tough polycarbonate plastics that require special blades and procedures for proper cutting. Cutting of this material must follow material manufacturers production specifications.

Fabrication Procedure

Special edge treatments are necessary to prolong the life of waterway signs made of Series 3970G Diamond Grade retro-reflective sheeting to the greatest extent possible. Optimum sign performance also requires the use of certain fabrication techniques. Sign fabricators must therefore employ the following materials and procedures in manufacturing waterway signs.

1. Apply background sheeting using either a powered squeeze roll applicator or manual hand squeeze roll applicator on properly prepared aluminum. If splicing of sheeting is necessary, use butt splices.

2. Apply sheeting so that the orientation arrows will be in a vertical position on finished signs for maximum entrance angularity.

3a. For multi-panel signs, the internal edges must be wrapped with clear 3M Series 1170 film. Coverage of the Series 3970G sheeting should be between 0.25" and 0.375" with the remaining 1170 film smoothly folded over the sign edge and adhered to the sign back.

b. All sheeting splices must be covered with clear, 0.75" Series 1170 film. The 1170 film should be centered over the splice to provide even coverage on both sides of the seam.

c. For application of clear Series 1170 film, use either a plastic squeeze applicator, PA-1 with low friction sleeve SA-1, or a 2 inch rubber roller. Follow instructions in 3M Information Folder 24.

4. External edges of either single panel or multi-panel signs must be fitted with a 0.25" wide, white, self adhering edge molding of the type specified on page E.1 of Appendix E.

5. All copy must be cut so that the orientation arrows are in the vertical position on the finished sign.

Refer to 3M publications: Elec. Cuttable Film–PB 1170, Dia. Grade–PB 3970G, Squeeze Applic.–IF 22, Hand Application–IF 24, Hand Squeeze Roll Applicator–IF 30, Base Surf. Prep.–IF 40.

Table 2 - Color Specification Limits[3]

Color	*1*		*2*		*3*		*4*		*Y(%)*	
	x	y	x	y	x	y	x	y	min.	max.
White	0.305	0.305	0.355	0.355	0.335	0.375	0.285	0.325	40	-
Red	0.690	0.310	0.595	0.315	0.569	0.341	0.655	0.345	3	15
Blue	0.078	0.171	0.150	0.220	0.210	0.160	0.137	0.038	1	10
Lemon Yellow	0.480	0.522	0.438	0.476	0.335	0.570	0.373	0.625	70	-

[3] As measured by CIE 1931 standard colorimetric system measured with standard illuminant D65.

Ground mounted sign with two or three fabricated structural steel beam posts. Used for large scale signs (> 100 square feet), and to accommodate panel areas up to 1,500 square feet.

1 Aluminum sign panel, backed with continuous L-rail for rigidity. When the size of the panel is larger than the readily available sheet aluminum, a splice shall be required. See detail 16-17, page B.7-6.

Graphics shall be applied to fully assembled panel and then dis-assembled as required for shipping to installation site.

2 Fabricated structural steel beam, welded to base plate. Cross bracing may be required for added rigidity.

Factory install attachment brackets, see detail 18, page B.7-7. Pre-drill all brackets prior to galvanizing. Receiving holes may be over-sized or slotted to allow for adjustment during field assembly.

Steel structure shall be galvanized after all shop fabrication has been completed.

3 L-rail, attached to panel using threaded welded studs, bolted to the L-rail with standard stainless steel hardware (or vandal resistant hardware if required), see detail 18, page B.7-7. L-rail shall be factory pre-drilled. Receiving holes may be over-sized or slotted to allow for adjustment during field assembly.

Small panels may be attached to the posts in one piece; larger panels may require installation of the L-rail to the post, followed by attachment of panels to the rails.

4 Mounting base plate, anchored to the footing, see detail 21, page B.7-9. Triple nut design allows for levelling and aligning posts during installation. Direct embedment is strongly discouraged for a sign of this size.

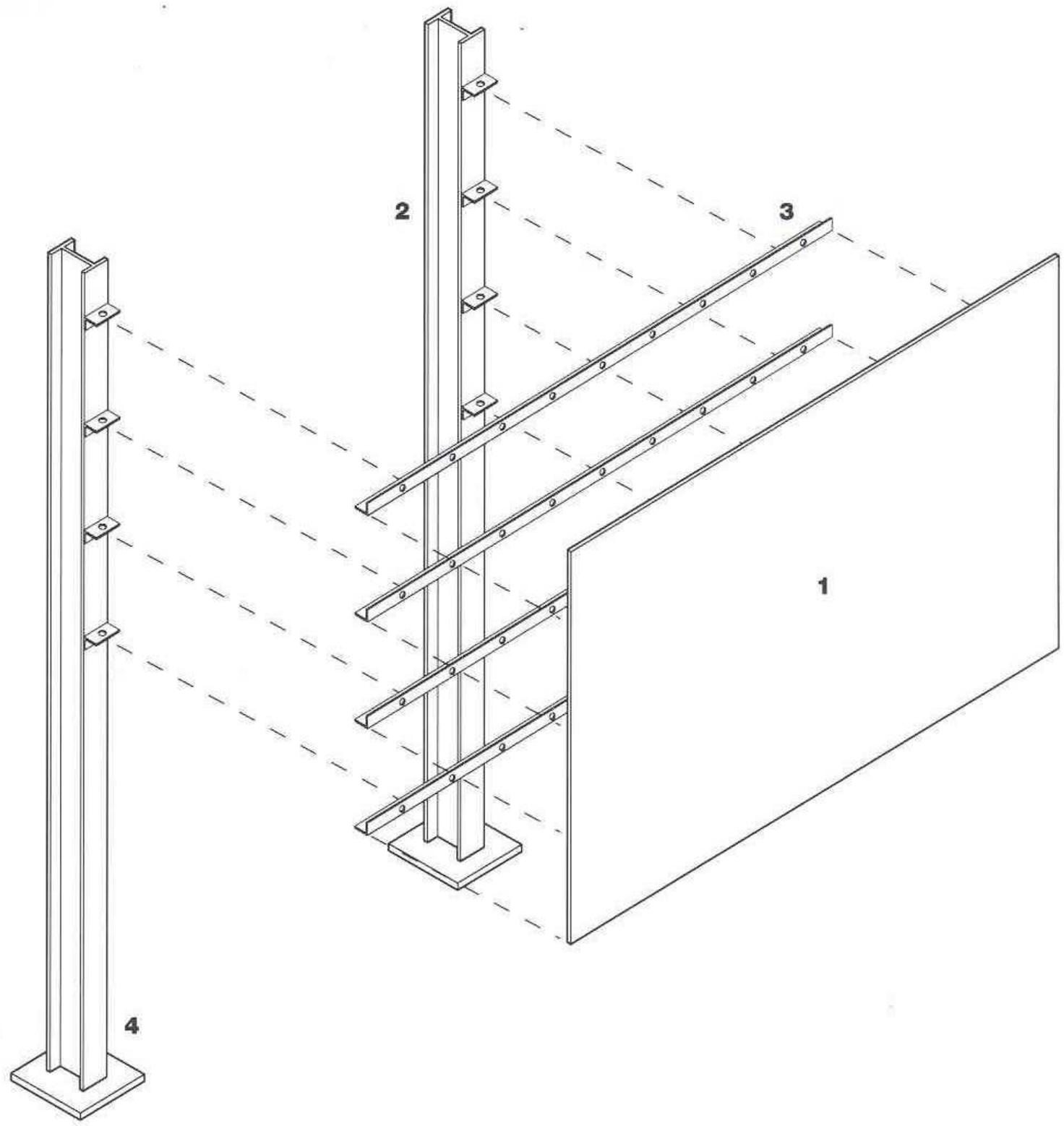

Exploded View

Engineered examples, see page B.13-8.

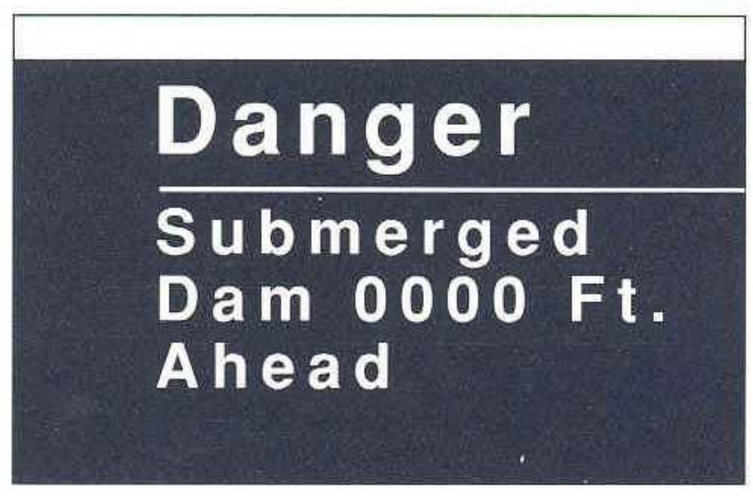

Ground mounted sign with two fabricated tubular steel posts. Used for both small scale (>12 square feet), and large scale signs (> 100 square feet), accommodating panel areas up to 1,000 square feet.

1 Aluminum sign panel, backed with continuous L-rail for rigidity. When the size of the panel is larger than the readily available sheet aluminum, a splice shall be required, see detail 16-17, page B.7-6.

Graphics shall be applied to fully assembled panel and then dis-assembled as required for shipping to installation site.

2 Tubular steel post with welded cap and base plate. Cross bracing may be required for added rigidity on large structures.

Factory install attachment brackets, see detail 18, page B.7-7. Pre-drill all brackets prior to finishing. Receiving holes may be over-sized or slotted to allow for adjustment during field assembly.

Steel structure shall be galvanized after all shop fabrication has been completed.

3 L-rail, attached to panel using threaded welded studs, bolted to the L-rail with standard stainless steel hardware (or vandal resistant hardware if required), see detail 18, page B.7-7. L-rail shall be factory pre-drilled. Receiving holes may be over-sized or slotted to allow for adjustment during field assembly.

Small panels may be attached to the posts in one piece; larger panels may require installation of the L-rail first to the post, followed by attachment of panels to rails.

4 Mounting base plate, anchored to the footing, see detail 21, page B.7-9. Triple nut design allows for levelling and aligning posts during installation. Direct embedment is strongly discouraged for larger signs of this type.

Brace directly embedded signs plumb until concrete sets.

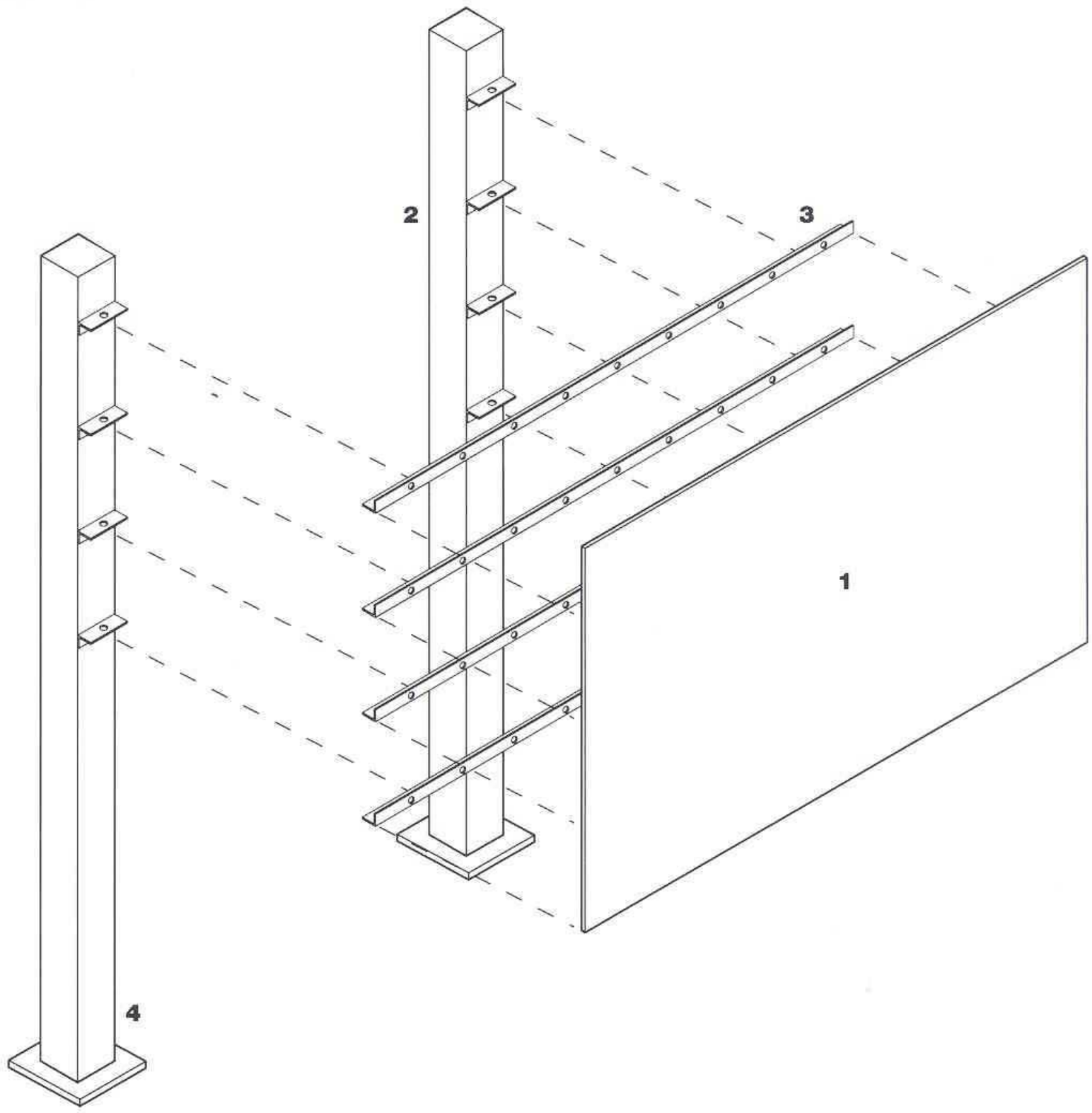

Exploded View

Engineered examples, see page B.13-9 through B.13-12.

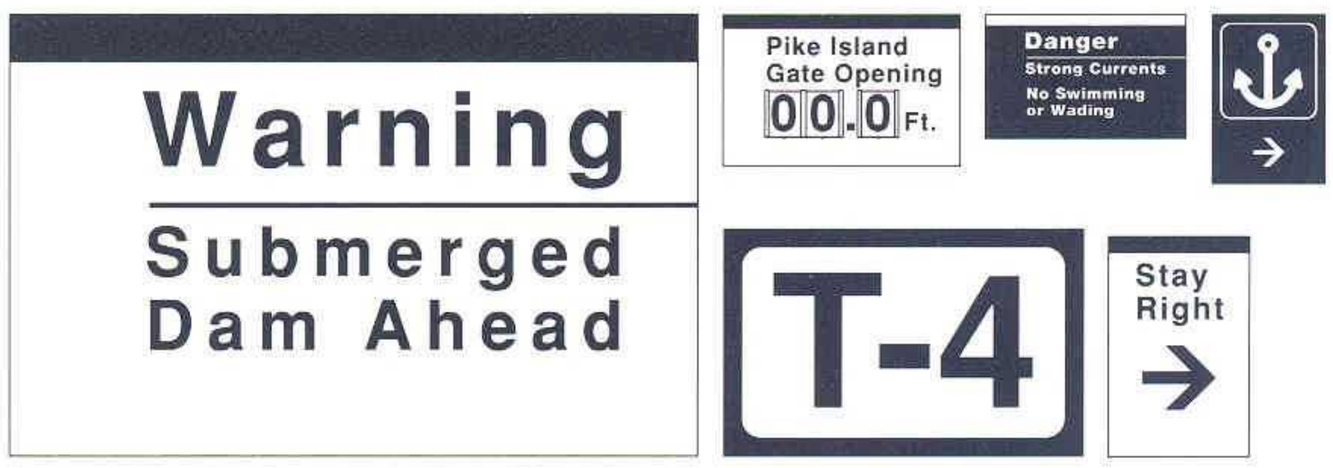

Ground mounted sign with two fabricated tubular steel or aluminum posts and heavy plate aluminum sign panel. Used for small scale (up to 12 square feet) signs in remote locations, areas with a high incidence of vandalism, or where the supports of the structure are subject to extreme forces, including wave action on break waters, or being subject to abrasion by lines in lock chambers, or other problematic locations.

1 Aluminum sign panel.

2a Tubular steel post with welded cap, base plate, and threaded studs welded on the inside of the post for panel attachment.
Steel structure shall be galvanized after all shop fabrication has been completed.

2b Tubular aluminum post with welded cap and base plate.

3a L-rail, plug welded to the back of the sign panel. Attached panel assembly to threaded welded studs, bolting to the L-rail with standard stainless steel hardware (or vandal resistant hardware if required), see detail 22, page B.7-10. L-rail shall be factory pre-drilled. Receiving holes may be over-sized or slotted to allow for adjustment during field assembly. Sign must be fully assembled prior to mounting.

3b Contiguous welded sign assembly. No hardware required for post-panel attachment.

4 Mounting base plate, anchored to the footing, see detail 21, page B.7-9. Triple nut design allows for levelling and aligning posts during installation. Direct embedment may be allowed if conditions permit, but may require de-mountable frame to hold assembly in place until concrete sets.

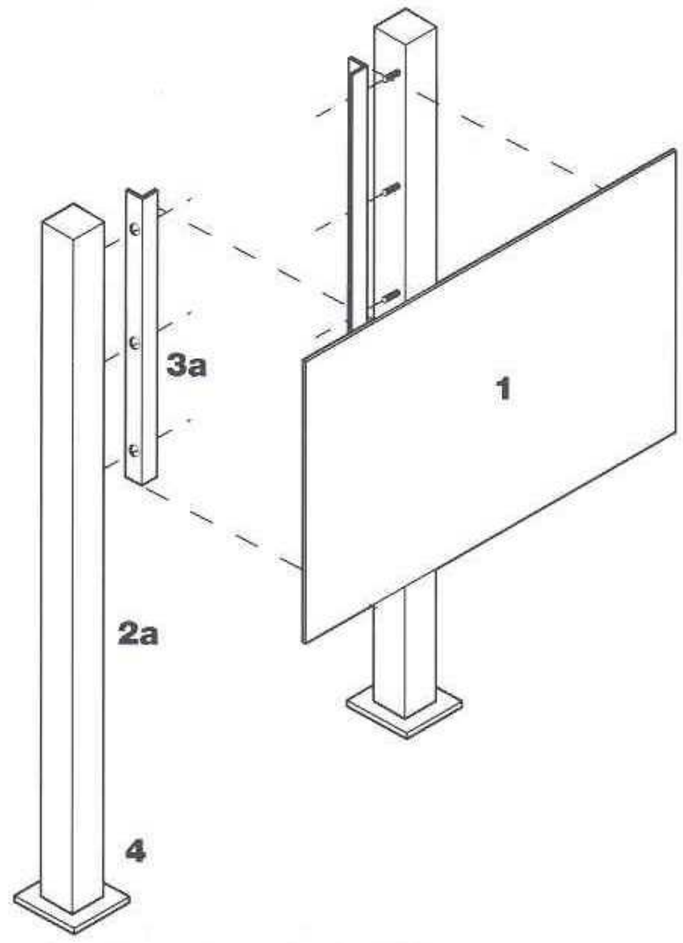

Steel post, exploded View

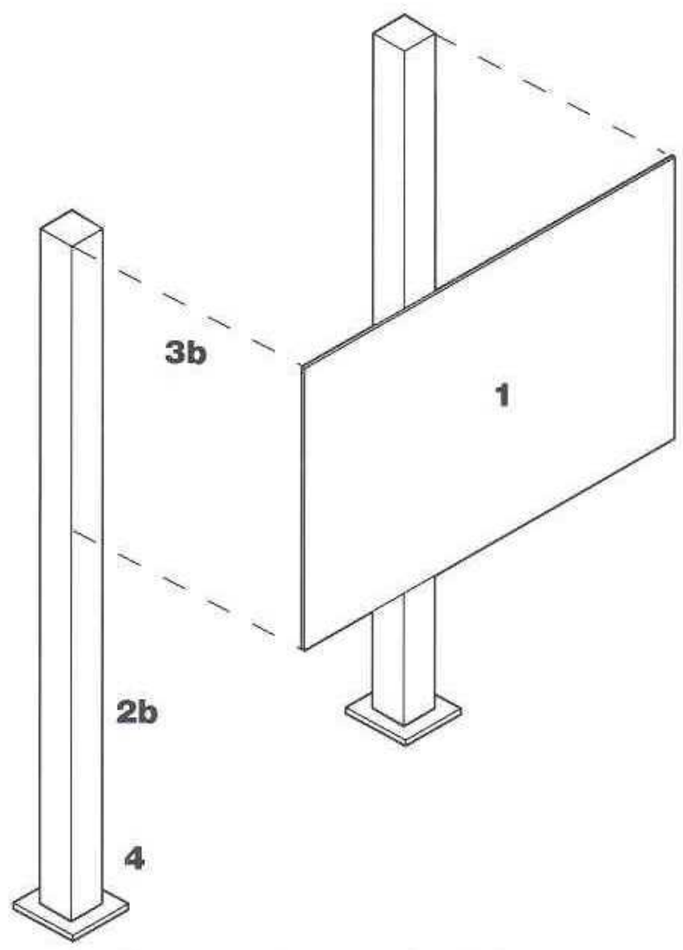

Aluminum post, exploded View

Engineered examples, see page B.13-13.

250

Caution

Waves Flood Surface During Storms and Rough Seas

Cantilevered sign with fabricated tubular steel post and mast arms, mounted on lock wall, cell or in the ground. Used for small to medium scale signs (< 100 square feet).

1 Aluminum sign panel, directly attached to mast arms, see detail 20, page B.7-8. Large panels may require vertical L-rail sections for rigidity, with L-rails bolted to brackets welded on mast arms, see detail 18, page B.7-7. When the size of the panel is larger than the readily available sheet aluminum, a splice shall be required, see detail 16-17, page B.7-6.

Graphics shall be applied to fully assembled panel and then dis-assembled as required for shipping to installation site.

2 Tubular steel post with welded cap and base plate. Larger mast arm assemblies may require cross bracing for added rigidity.

Factory install attachment brackets, see detail 18, page B.7-7. Pre-drill all brackets prior to galvanizing. Receiving holes may be over-sized or slotted to allow for adjustment during field assembly.

Steel structure shall be galvanized after all shop fabrication has been completed.

3 Optional L-rail for larger sign panels, attached to panel using threaded welded studs, bolted to the L-brackets with standard stainless steel hardware (or vandal resistant hardware if required), see detail 18, page B.7-7. L-rail shall be factory pre-drilled.

Small panels may be attached directly to the posts; larger panels may require installation of the L-rail first to panel, followed by attachment of panels to L-brackets on the post.

4 Mounting base plate, anchored to the footing, see detail 21, page B.7-9. Triple nut design allows for levelling and aligning posts during installation. Direct embedment is strongly discouraged for a sign of this size.

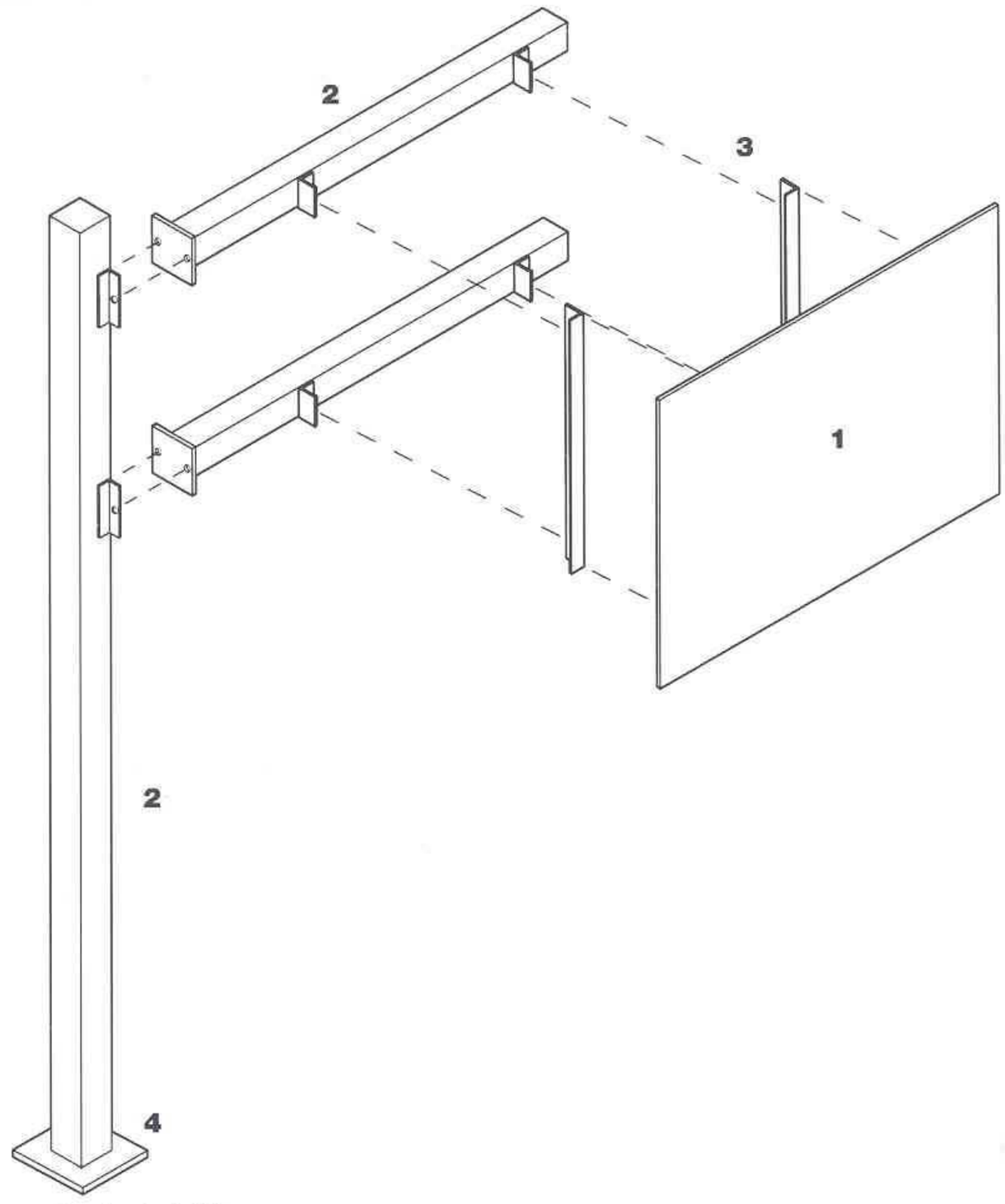

Exploded View

Engineered examples, see pages B.13-14.

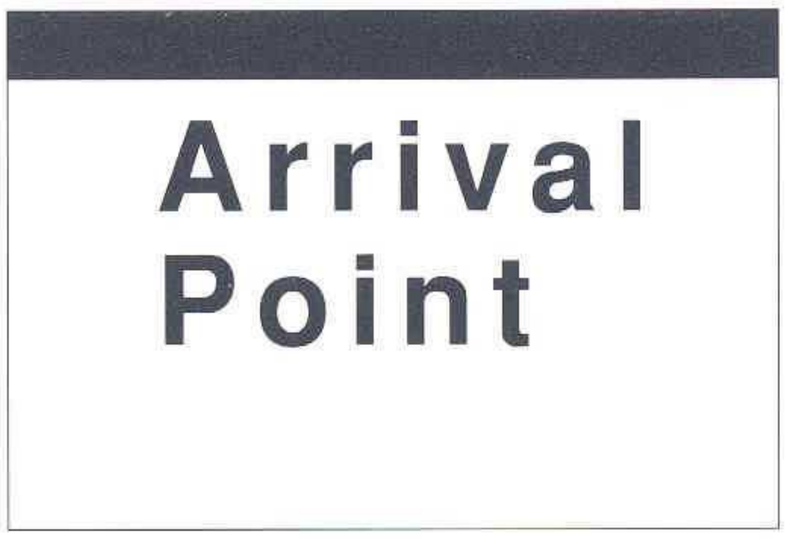

Ground mounted sign with one fabricated tubular steel post. Used for small and medium scale (up to 42 square feet) signs.

1 Aluminum sign panel, backed with continuous L-rail for rigidity. When the size of the panel is larger than the readily available sheet aluminum, a splice shall be required, see detail 16-17, page B.7-6.

Graphics shall be applied to fully assembled panel and then dis-assembled as required for shipping to installation site.

2 Tubular steel post with welded cap and base plate.

Factory install attachment brackets, see detail 18, page B.7-7. Pre-drill all brackets prior to galvanizing. Receiving holes may be over-sized or slotted to allow for adjustment during field assembly.

Steel structure shall be galvanized after all shop fabrication has been completed.

3 L-rail, attached to panel using threaded welded studs, bolted to the L-brackets with standard stainless steel hardware, or vandal resistant hardware if required, see detail 18, page B.7-7. L-rail shall be factory pre-drilled.

Small panels may be attached directly to the posts; larger panels may require installation of the L-rail first to panel, followed by attachment of panels to L-brackets on the post.

4 Mounting base plate, anchored to the footing, see detail 21, page B.7-9. Triple nut design allows for levelling and aligning posts during installation. Direct embedment may be allowed if conditions permit, but is strongly discouraged for larger signs of this type. Brace directly embedded signs plumb until concrete sets.

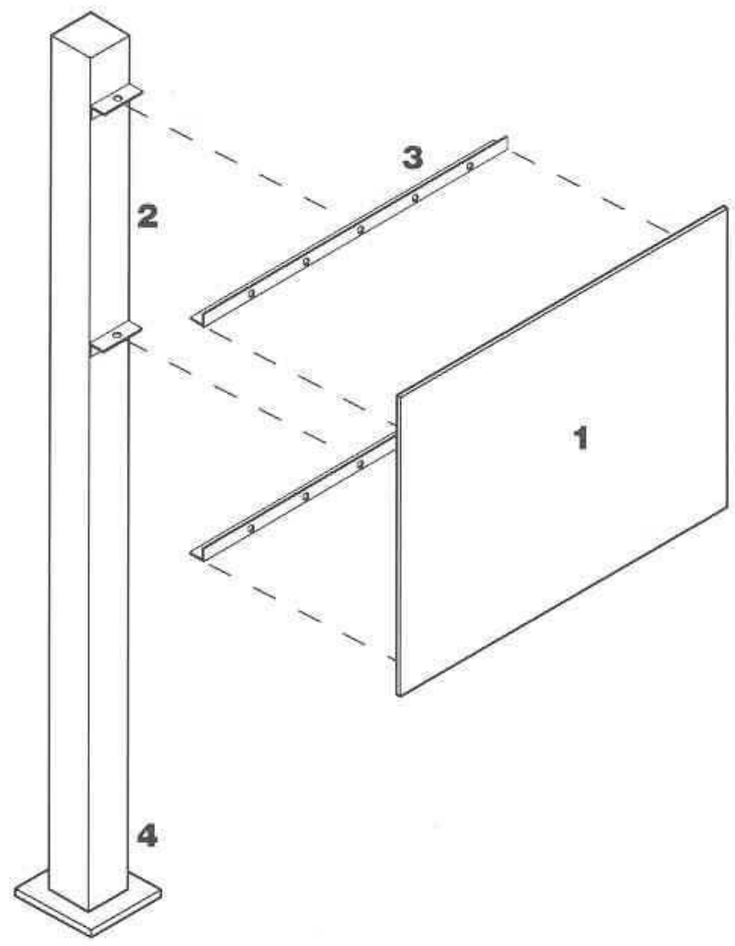

Exploded View

Engineered examples, see page B.13-14 and B.13-15.

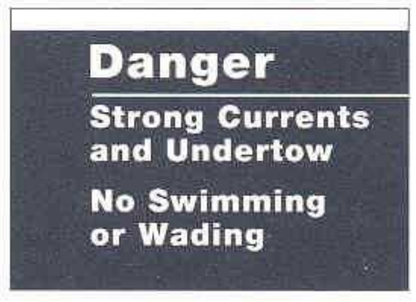

Surface or wall mounted sign. Used for both large (up to 100 square feet) and small scale (up to 12 square feet) signs.

1 Aluminum sign panel, backed with continuous L-rail for rigidity. When the size of the panel is larger than the readily available sheet aluminum, a splice shall be required, see detail 16-17, page B.7-6.

Graphics shall be applied to fully assembled panel and then dis-assembled as required for shipping to installation site.

2 L-rail, attached to panel using threaded welded studs. Bolt to the wall mounted L-rail with standard stainless steel hardware, or vandal resistant hardware if required, see detail 23, page B.7-10. L-rail shall be factory pre-drilled. Receiving holes may be over-sized or slotted to allow for adjustment during field assembly.

3 Continuous aluminum angle bracket, attached to surface using HILTI HVA anchor bolts (or equal).

NOTE: Both angles are continuous and are of aluminum.

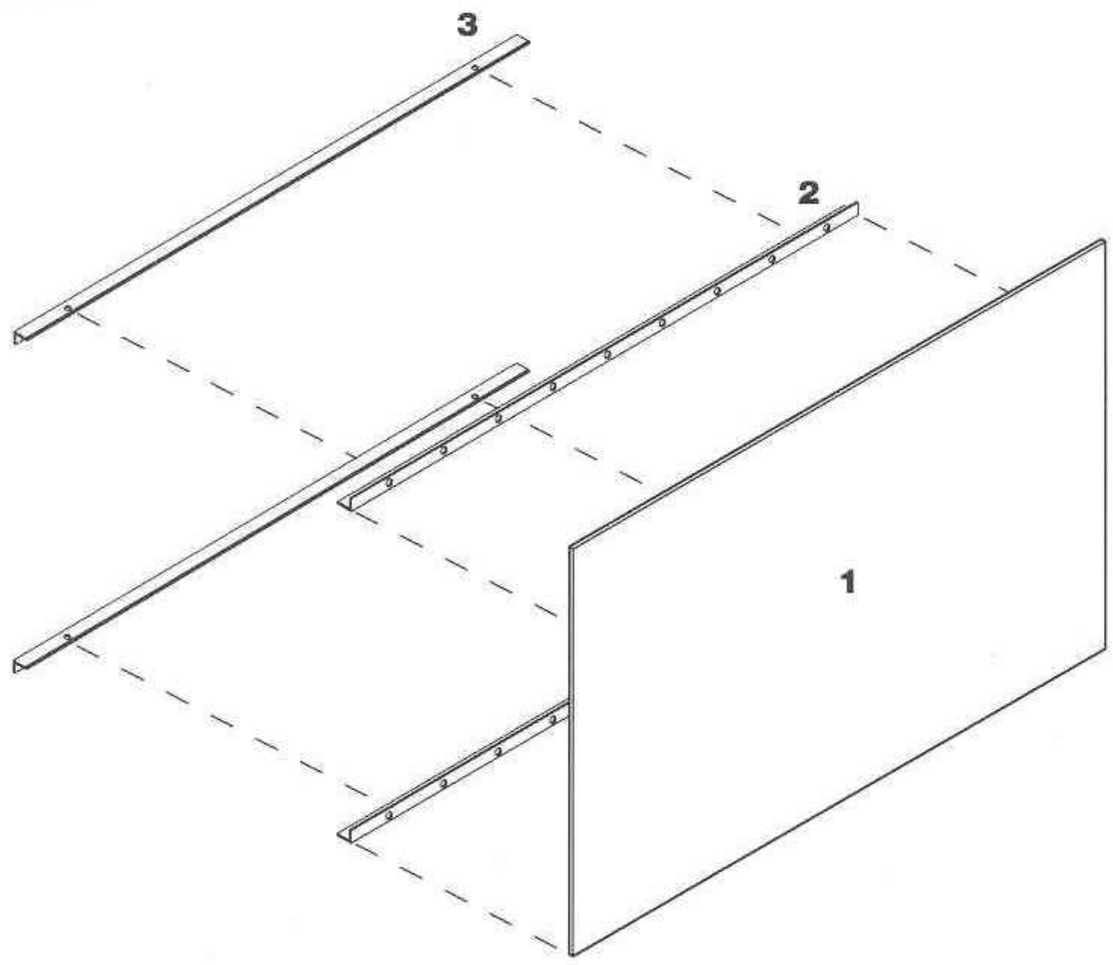

Exploded View

Engineered examples, see page B.13-15.

Cantilevered sign with fabricated mast arm assembly, mounted on wall or surface. Used for small to medium scale signs (< 100 square feet).

1 Aluminum sign panel, directly attached to mast arms, see detail 20, page B.7-8. Large panels may require vertical L-rail sections for rigidity, with L-rails bolted to brackets welded on mast arms, see detail 18, page B.7-7. When the size of the panel is larger than the readily available sheet aluminum, a splice shall be required, see detail 16-17, page B.7-6.

Graphics shall be applied to fully assembled panel and then dis-assembled as required for shipping to installation site.

2 Tubular steel mast arm assembly with welded caps. Larger mast arm assemblies may require cross bracing for added rigidity.

Factory install attachment brackets, see detail 18, page B.7-7. Pre-drill all brackets prior to galvanizing. Receiving holes may be over-sized or slotted to allow for adjustment during field assembly.

Steel structure shall be galvanized after all shop fabrication has been completed.

3 Optional L-rail for larger sign panels, attached to panel using threaded welded studs, bolted to the L-brackets with standard stainless steel hardware, or vandal resistant hardware if required, see detail 18, page B.7-7. L-rail shall be factory pre-drilled.

Small panels may be attached to the posts in one piece; larger panels may require installation of the L-rail to the post, followed by attachment of panels to the rails.

4 Mast arm frame, attached to surface using HILTI HVA anchor bolts (or equal) with galvanic isolation (bituminous or silicone sealer) between frame and wall surface.

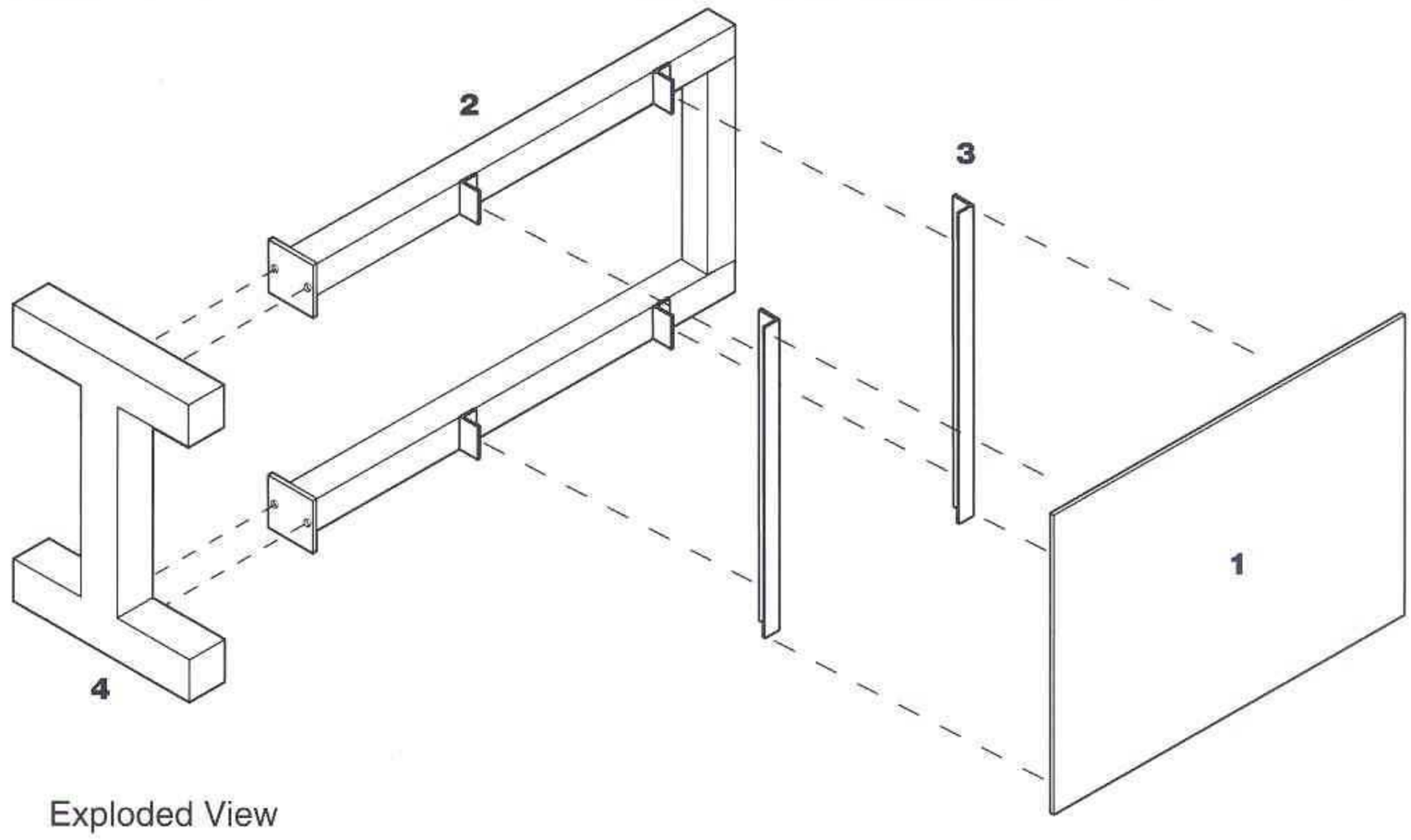

Exploded View

Engineered examples, see page B.13-16.

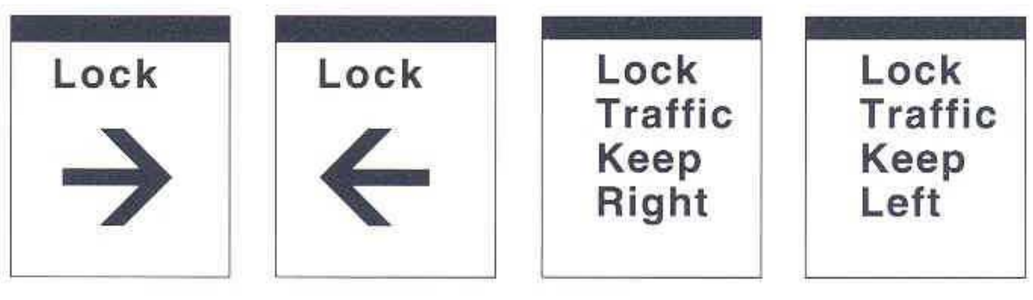

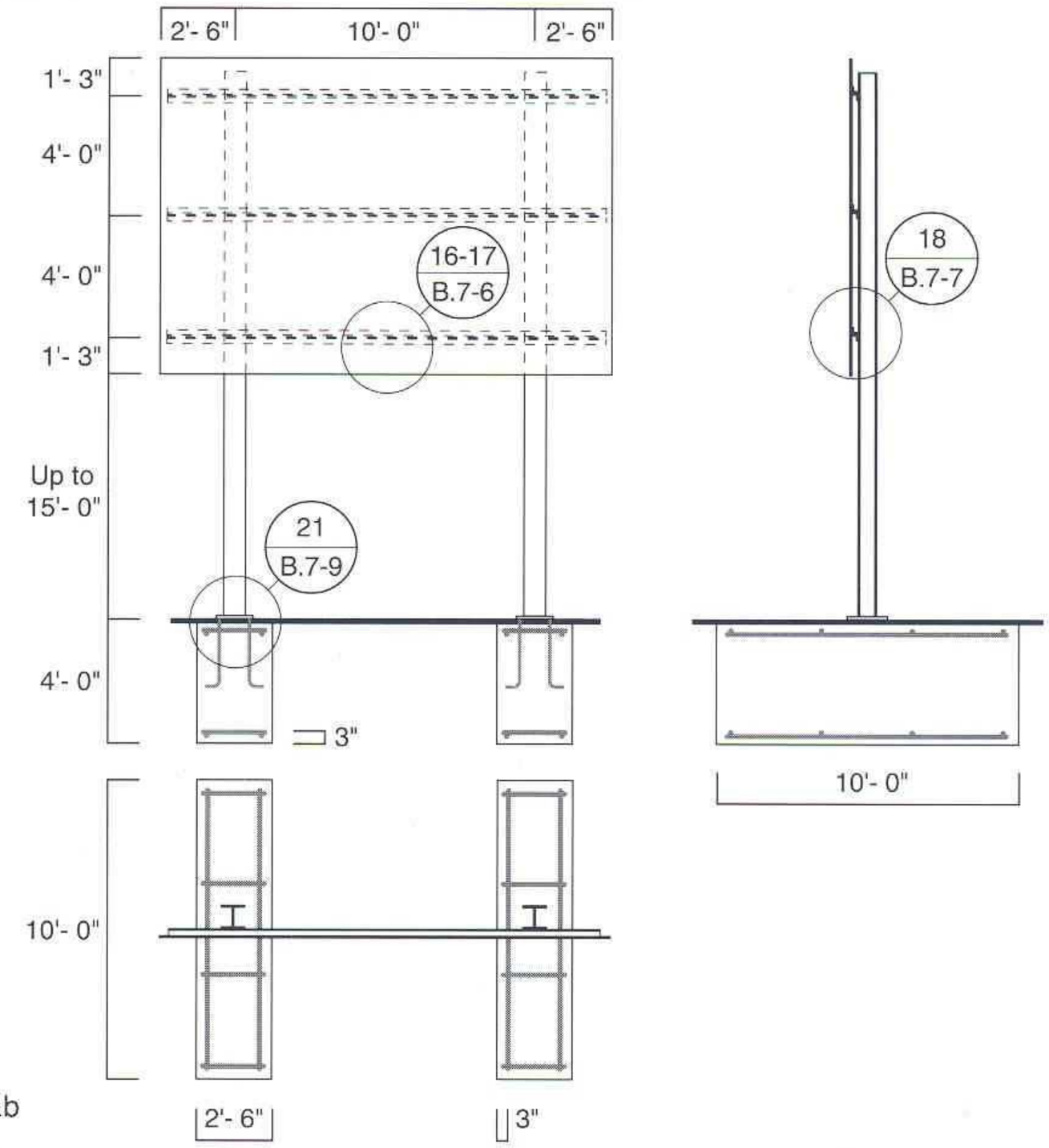

WDA-1

Scale:	0.125" = 1'
Sign page:	14.11
Legend size (A):	12"
Panel size:	180" x 126" x 0.125"
Post size:	W12x 26
L-rail/bracket:	3" x 3" x 0.25"
Base plate:	12" x 18" x 1"
Anchor bolts:	1"ø x 2'- 6" A36
Footing:	2'- 6" x 4'- 0" x 10'- 0"
Rebar (short):	No.4 @ 1'- 6" c/c t&b
Rebar (long):	3-No.4 equal spaced t&b

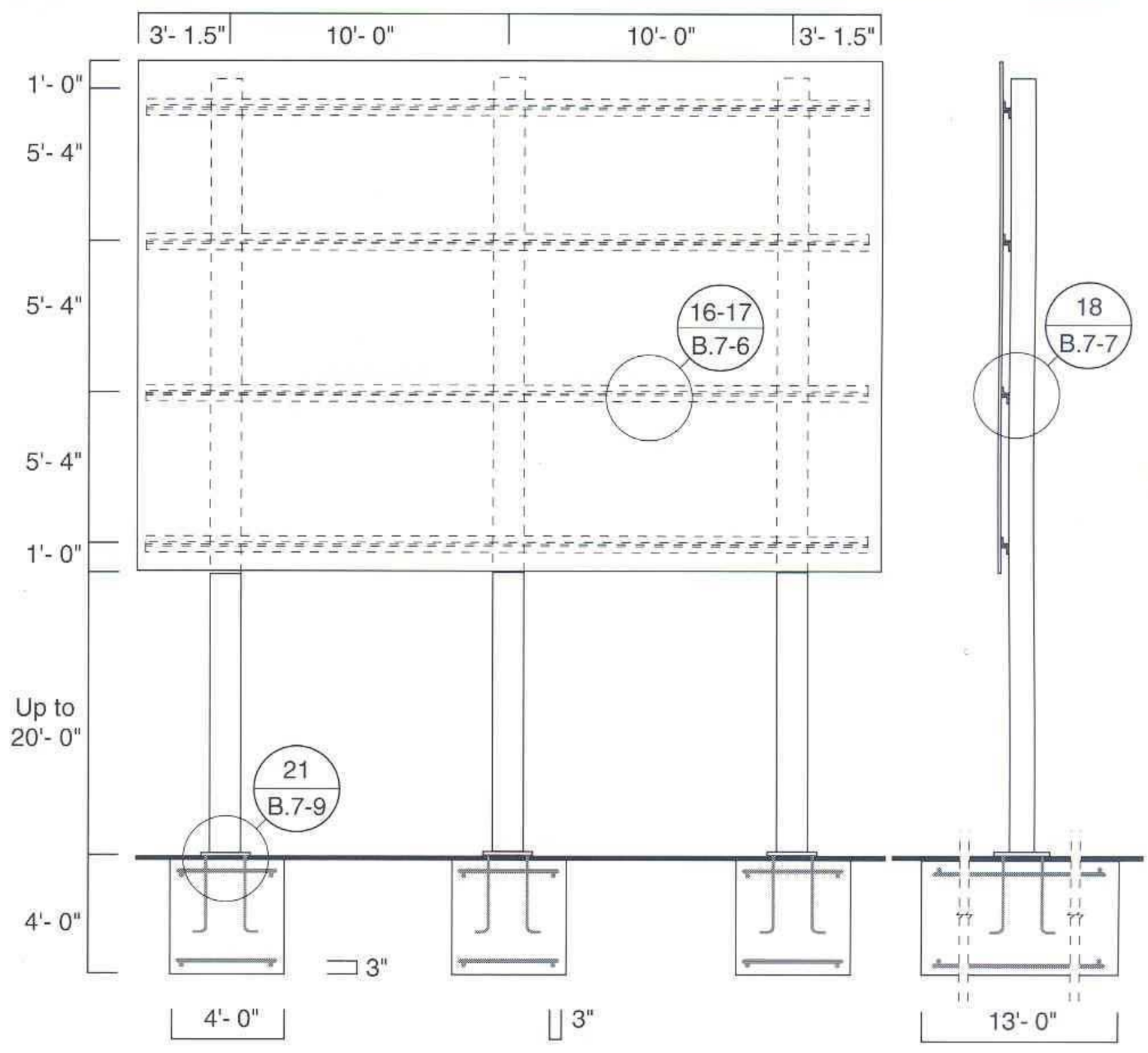

WWA-1

Scale:	0.125" = 1'
Sign page:	14.10
Legend size (A):	24"
Panel size:	315" x 216" x 0.190"
Post size:	W18 x 55
L-rail/bracket:	3.5" x 3" x 0.25" (LLH)
Base plate:	18" x 26" x 1.25"
Anchor bolts:	1.5"ø x 3'- 6" A36
Footing:	4'- 0" x 4'- 0" x 13'- 0"
Rebar (short):	No.4 @ 1'- 6" c/c t&b
Rebar (long):	3-No.6 equal spacing t&b

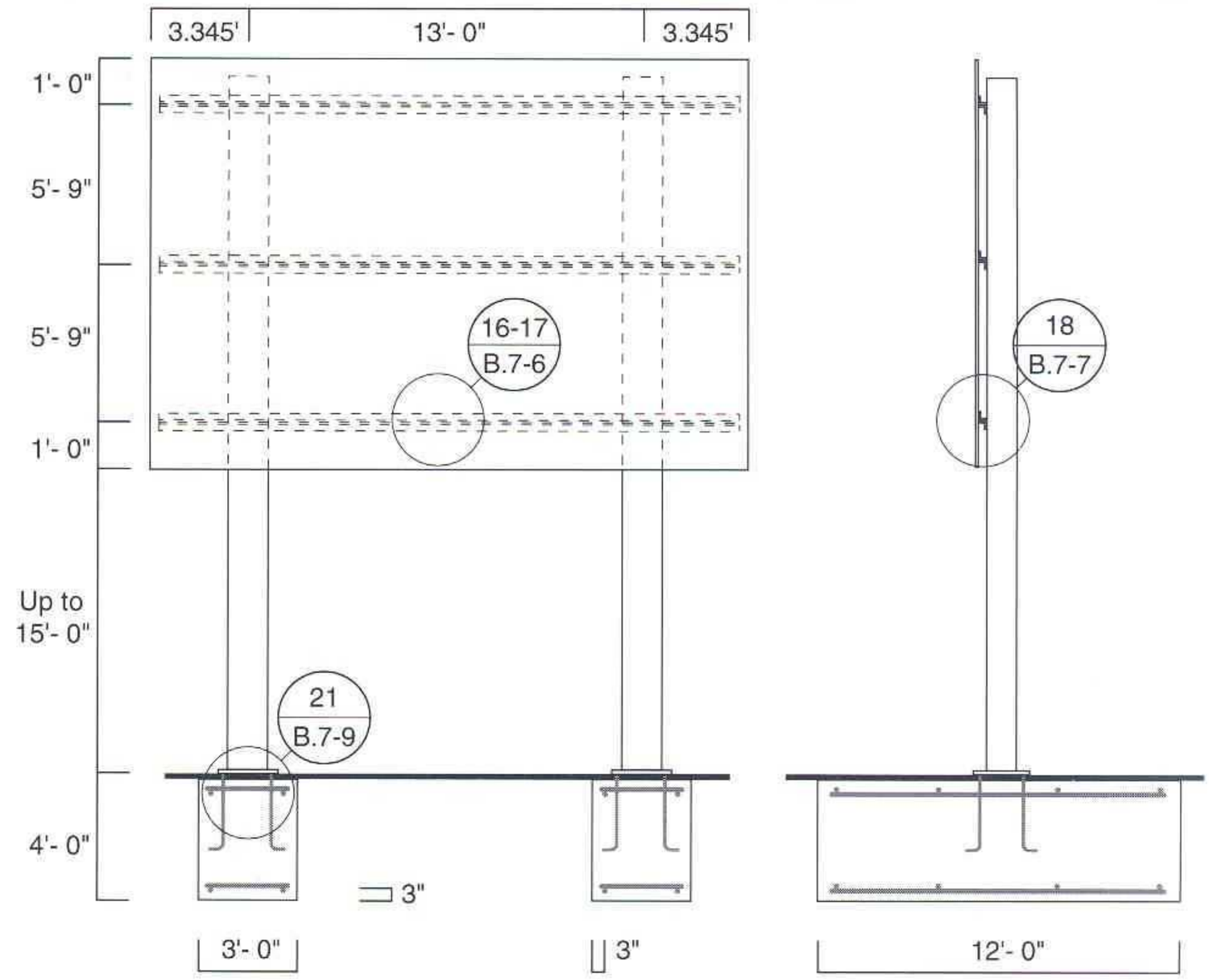

WWA-1

Scale:	0.125" = 1'
Sign page:	14.10
Legend size (A):	18"
Panel size:	236.25" x 162" x 0.190"
Post size:	TS 10" x 10" x 0.375"
L-rail/bracket:	5" x 3" x 0.25" (LLH)
Base plate:	18" x 24" x 1.25"
Anchor bolts:	1.25"ø x 3'- 0" A36
Footing:	3'- 0" x 4'- 0" x 12'- 0"
Rebar (short):	No.4 @ 1'- 6" c/c t&b
Rebar (long):	3-No.5 equal spaced t&b

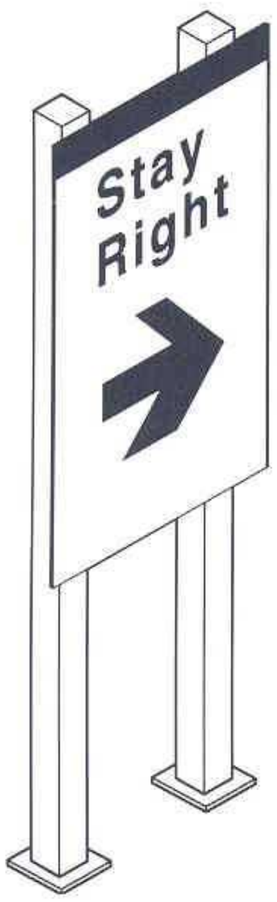

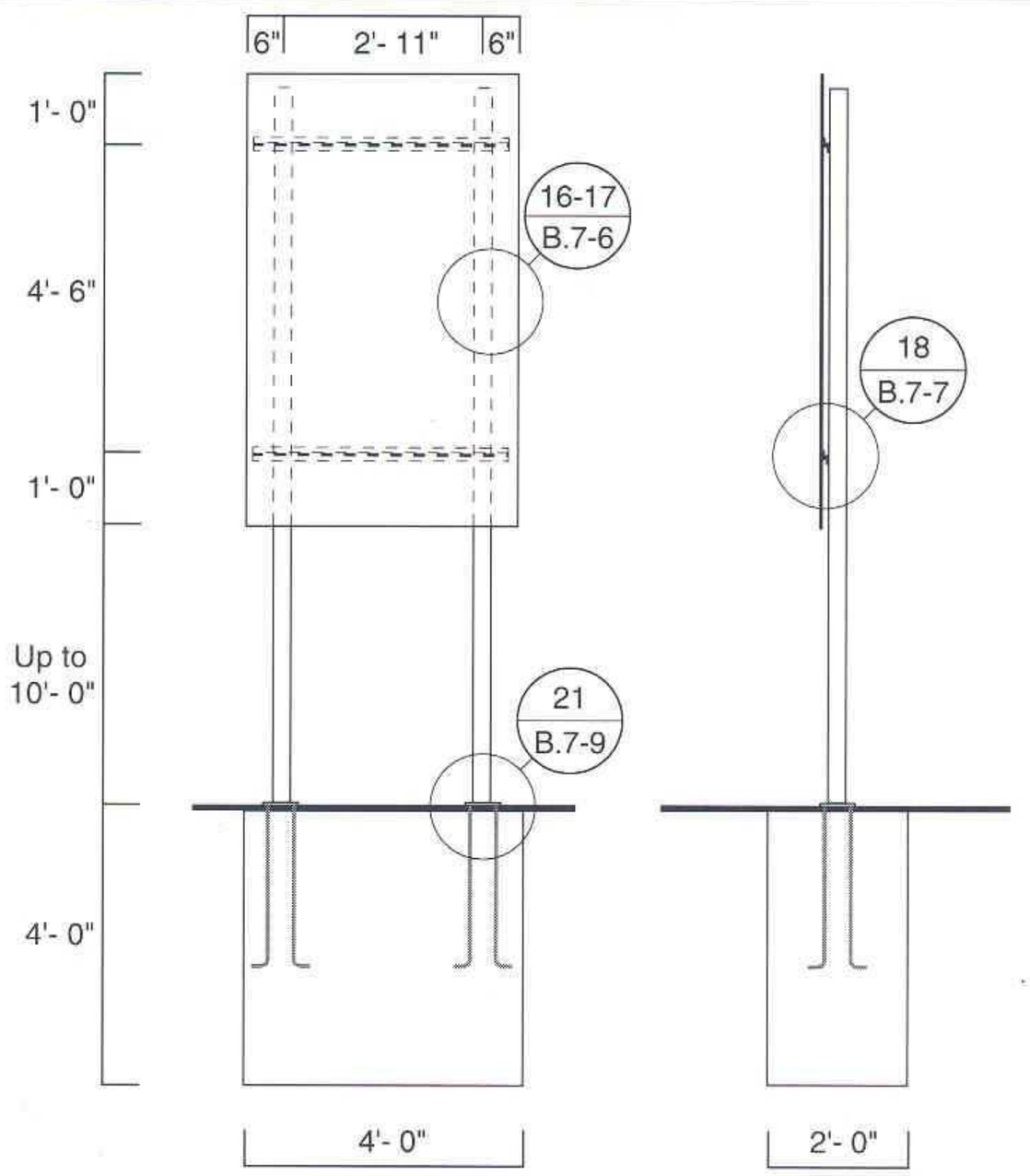

WLI-8/9

Scale:	0.25" = 1'
Sign page:	14.25
Legend size (A):	8"
Panel size:	47" x 78" x 0.125"
Post size:	TS 3" x 3" x 0.25"
L-rail/bracket:	2" x 2" x 0.25"
Base plate:	9" x 9" x 0.625"
Anchor bolts:	0.625"ø x 2'- 6" A36
Footing:	2'- 0" x 4'- 0" x 4'- 0"
Rebar:	None

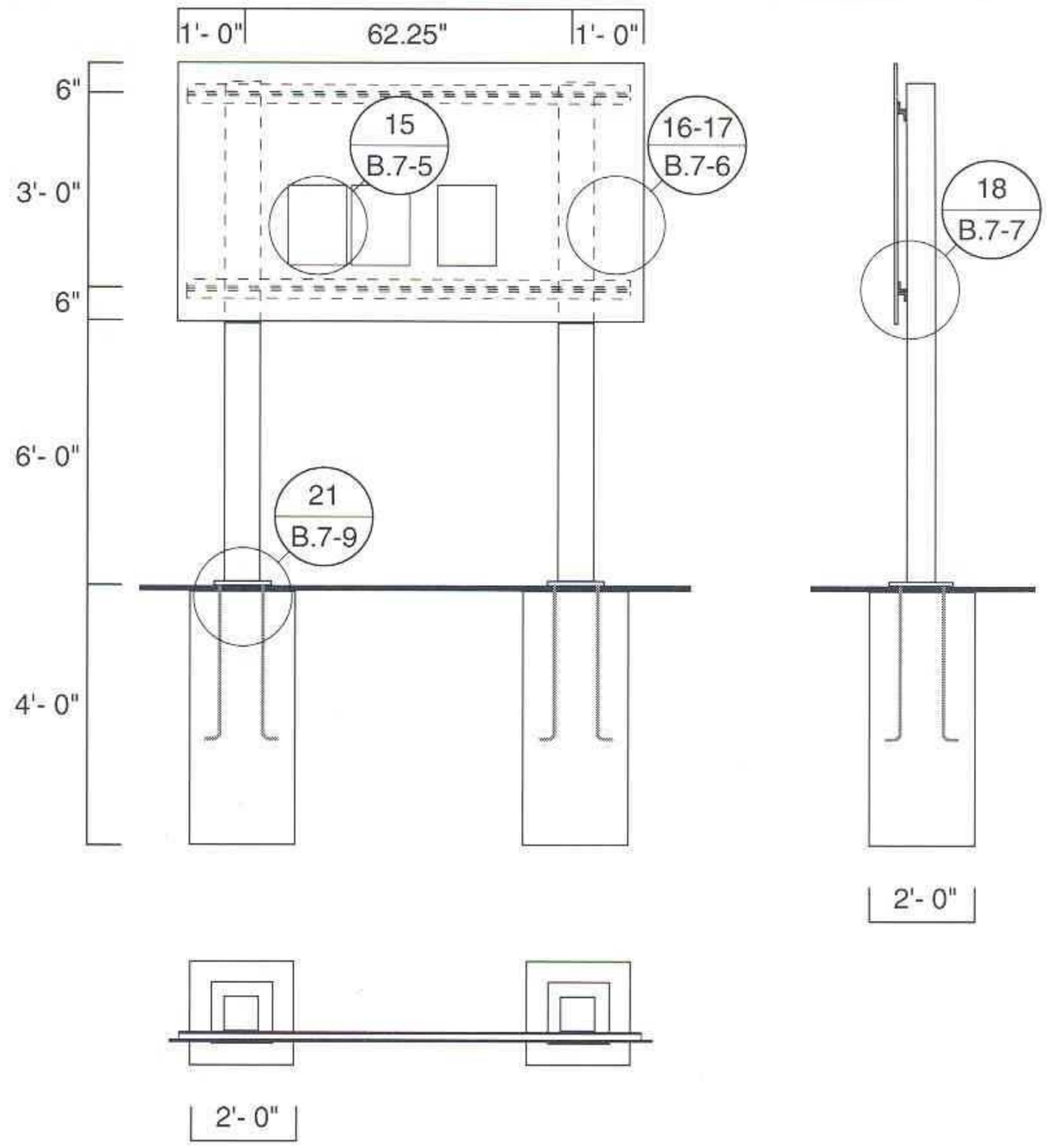

WLI-13

Scale:	0.25" = 1'
Sign page:	14.29
Legend size (A):	6"
Panel size:	86.25" x 48" x 0.125"
Post size:	TS 3" x 3" x 0.25"
L-rail/bracket:	2" x 2" x 0.25"
Base plate:	9" x 9" x 0.625"
Anchor bolts:	0.625"ø x 2'- 6" A36
Footing:	2'- 0" x 4'- 0" x 2'- 0"
Rebar:	None

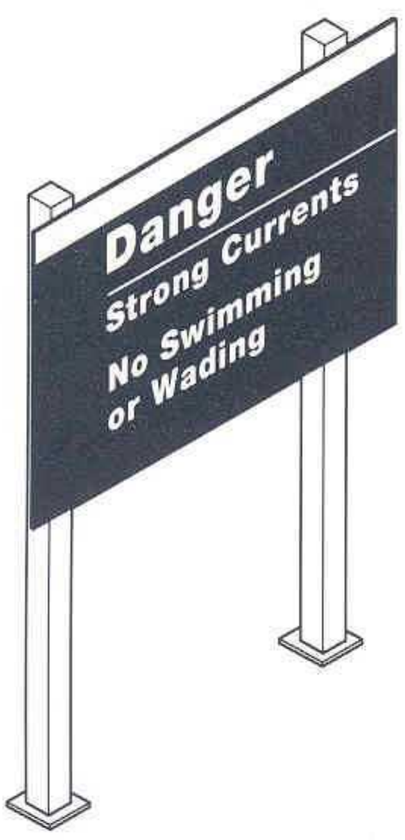

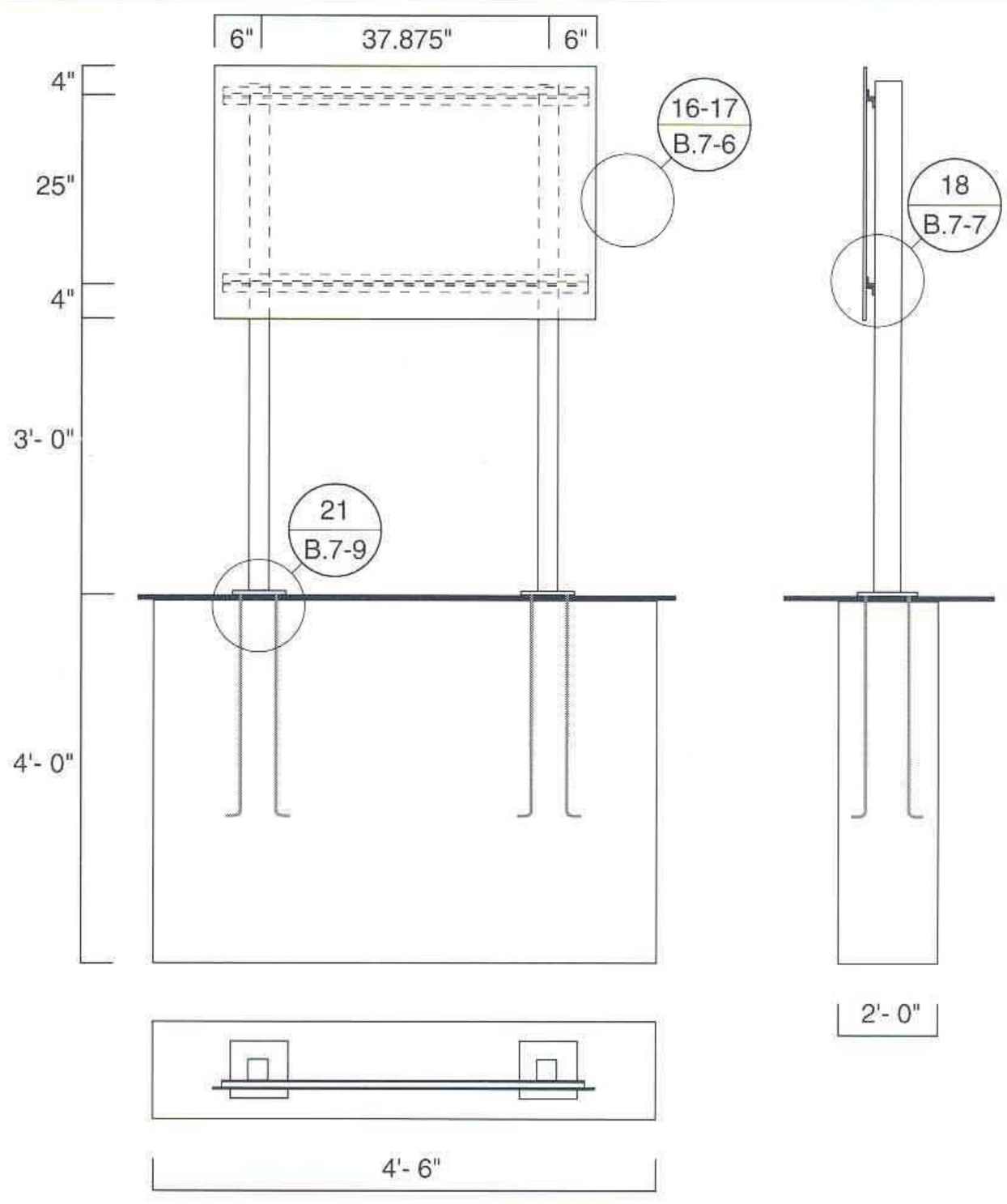

WDA-22

Scale:	0.375" = 1'
Sign page:	14.15
Legend size (A):	3"
Panel size:	49.875" x 33" x 0.125"
Post size:	TS 2" x 2" x 0.25"
L-rail/bracket:	2" x 2" x 0.25"
Base plate:	6.5" x 6.5" x 0.5"
Anchor bolts:	0.625"ø x 2'- 6" A36
Footing:	4'- 6" x 4'- 0" x 2'- 0"
Rebar:	None

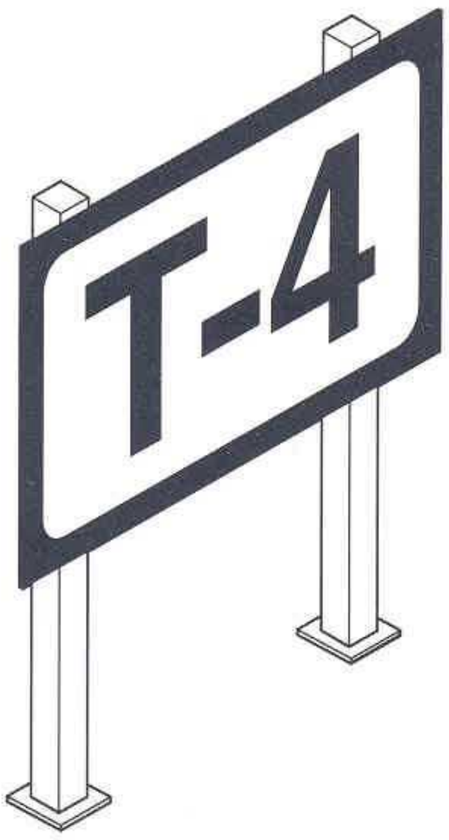

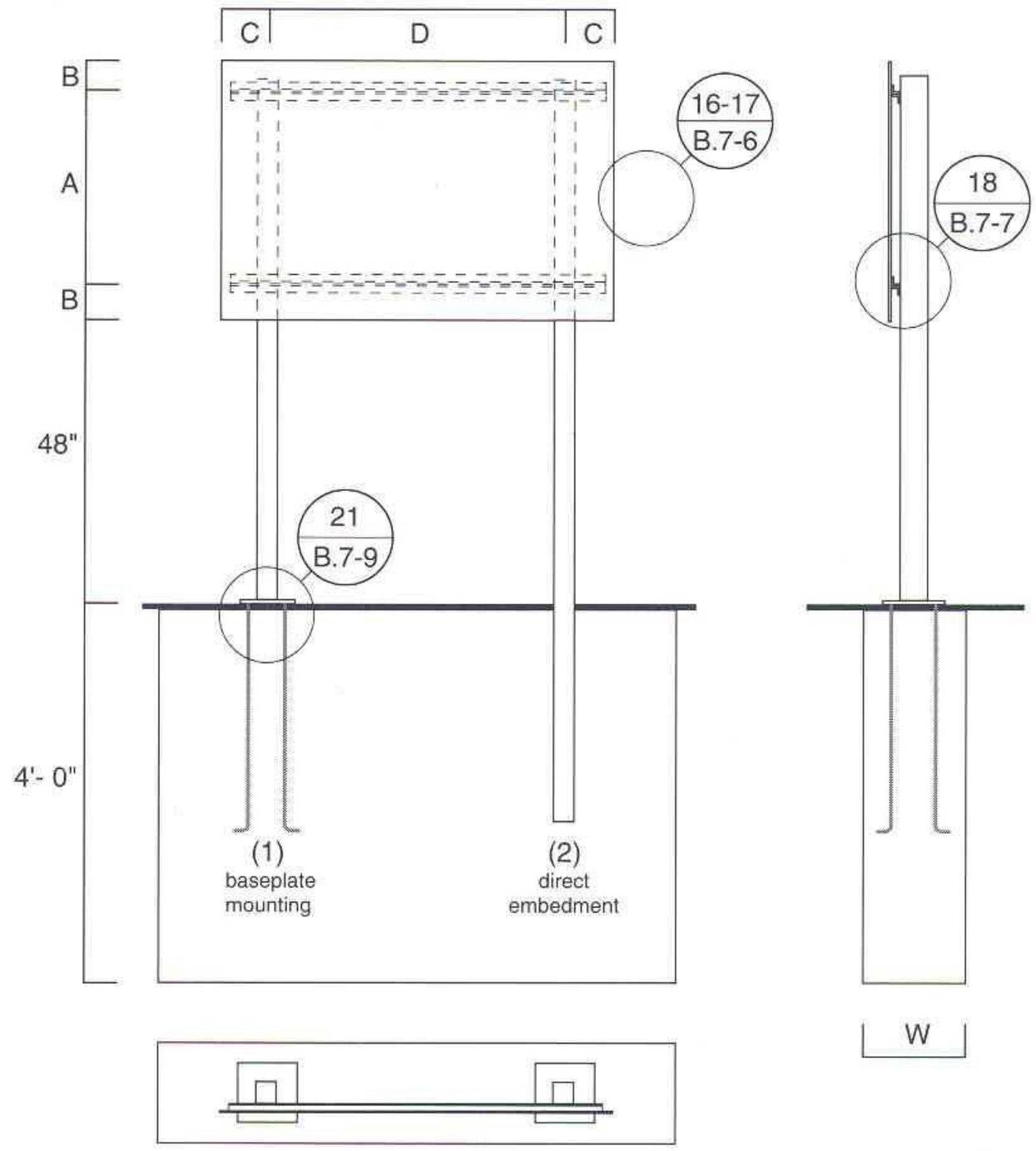

WPM-1/WSM-1

Scale: not to scale
Sign page: 14.31

Size of footing for mounting with direct embedment and/or baseplate are the same. Use of baseplate requires pre-setting J-Bolts when footing is placed. See Detail 21, page B.7–9, and refer to the baseplate and J-bolt sizes for each below.

1) Sign mounting with J-bolt and baseplate

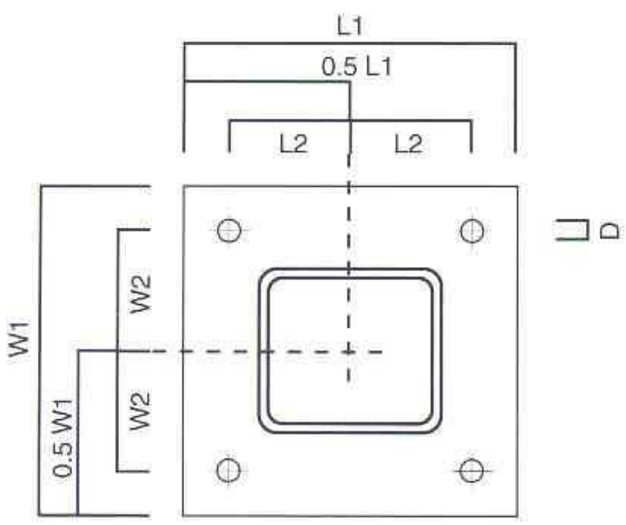

Panels Size (in inches)	Base Plate T x W1 x L1 (in inches)	Hole Diameter D (ø) (in inches)	L2/W2 (in inches)	J-Bolts (A-36 A/B) No.	Bolt ø (in inches)	L
24 x 24	0.5 x 6.5 x 6.5	0.875	2.25	4 each	0.625	2'-6"
36 x 24	0.5 x 6.5 x 6.5	0.875	2.25	4 each	0.625	2'-6"
48 x 24	0.5 x 6.5 x 6.5	0.875	2.25	4 each	0.625	2'-6"
36 x 36	0.5 x 6.5 x 6.5	0.875	2.25	4 each	0.625	2'-6"
54 x 36	0.5 x 6.5 x 6.5	0.875	2.25	4 each	0.625	2'-6"
72 x 36	0.5 x 6.5 x 6.5	0.875	2.25	4 each	0.625	2'-6"
48 x 48	0.5 x 7.5 x 7.5	0.875	2.75	4 each	0.625	2'-6"
72 x 48	0.5 x 7.5 x 7.5	0.875	2.75	4 each	0.625	2'-6"
96 x 48	0.5 x 7.5 x 7.5	0.875	2.75	4 each	0.625	2'-6"
60 x 60	0.5 x 7.5 x 7.5	0.875	2.75	4 each	0.625	2'-6"
90 x 60	0.625 x 9 x 9	1	3	4 each	0.75	2'-6"
120 x 60	0.625 x 9 x 9	1	3	4 each	0.75	2'-6"
72 x 72	0.625 x 9 x 9	1	3	4 each	0.75	2'-6"
108 x 72	0.625 x 11 x 11	1	3.5	4 each	0.75	2'-6"
144 x 72	0.625 x 11 x 11	1.125	3.5	4 each	0.875	2'-6"

2) Sign assembly for direct embedment

Legend Size (in inches)	Panels size W x H 0.125" thick (in inches)	Posts (TS) Square tube 0.25" wall (in inches)	Support L- rails 0.25" thick (in inches)	Layout A (in inches)	B	C	D	Footing size L x W x Depth	Holes for footing
14	24 x 24	2–TS 2 x 2	L–2 x 2	16	4	4	16	2'- 6" x 2'- 0" x 4'- 0"	1
14	36 x 24	2–TS 2 x 2	L–2 x 2	16	4	5	26	3'- 6" x 2'- 0" x 4'- 0"	1
14	48 x 24	2–TS 2 x 2	L–2 x 2	16	4	8	32	4'- 0" x 2'- 0" x 4'- 0"	1
21	36 x 36	2–TS 2 x 2	L–2 x 2	28	4	5	26	3'- 6" x 2'- 0" x 4'- 0"	1
21	54 x 36	2–TS 2 x 2	L–2 x 2	28	4	9	36	4'- 6" x 2'- 0" x 4'- 0"	1
21	72 x 36	2–TS 2 x 2	L–2 x 2	28	4	12	48	5'- 6" x 2'- 0" x 4'- 0"	1
28	48 x 48	2–TS 3 x 3	L–2 x 2	36	6	8	32	4'- 0" x 2'- 0" x 4'- 0"	1
28	72 x 48	2–TS 3 x 3	L–2 x 2	36	6	12	48	5'- 6" x 2'- 0" x 4'- 0"	1
28	96 x 48	2–TS 3 x 3	L–2 x 2	36	6	15	66	2'- 0" x 2'- 0" x 4'- 0"	2
35	60 x 60	2–TS 3 x 3	L–2 x 2	42	9	9	42	5'- 0" x 2'- 0" x 4'- 0"	1
35	90 x 60	2–TS 3 x 3	L–2 x 2	42	9	15	60	2'- 0" x 2'- 0" x 4'- 0"	2
35	120 x 60	2–TS 3 x 3	L–3 x 3	42	9	18	84	2'- 0" x 2'- 0" x 4'- 0"	2
42	72 x 72	2–TS 4 x 4	L–3 x 3	48	12	12	48	5'- 6" x 2'- 0" x 4'- 0"	1
42	108 x 72	2–TS 4 x 4	L–3 x 3	48	12	18	72	2'- 0" x 2'- 0" x 4'- 0"	2
42	144 x 72	2–TS 4 x 4	L–3 x 3	48	12	24	96	2'- 6" x 2'- 0" x 4'- 0"	2

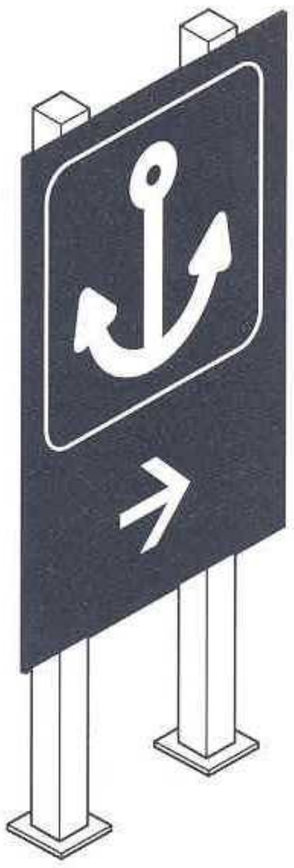

WS-000

Scale: not to scale
Sign page: 14.31

Size of footing for mounting with direct embedment and/or baseplate are the same. Use of baseplate requires pre-setting J-Bolts when footing is placed. See Detail 21, page B.7–9, and refer to the baseplate and J-bolt sizes for each below.

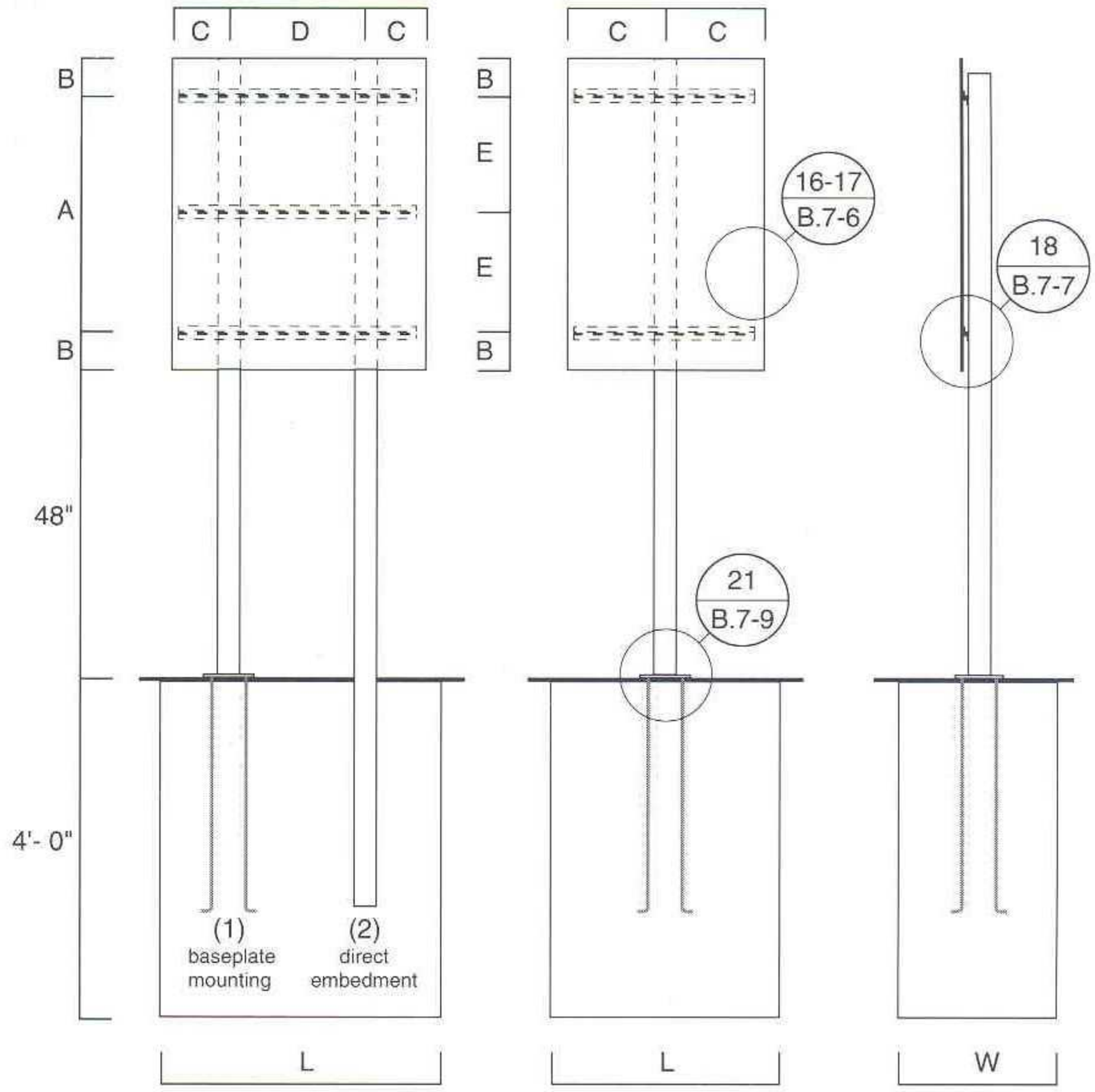

1) Sign mounting with J-bolt and baseplate

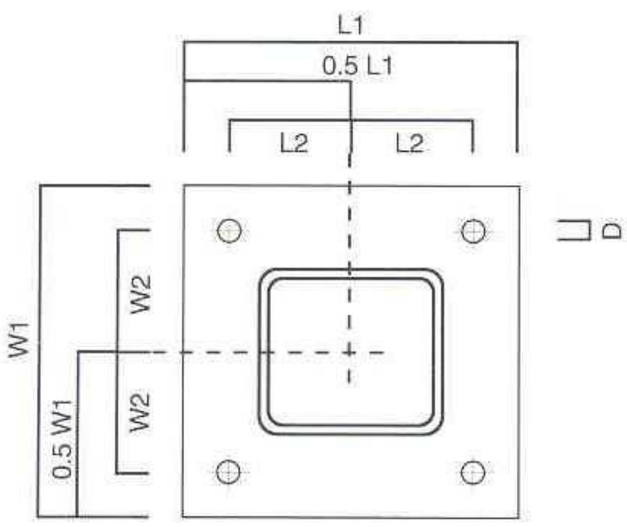

Panels Size (in inches)	Base Plate T x W1 x L1 (in inches)	Hole Diameter D (ø) (in inches)	L2/W2 (in inches)	J-Bolts (A-36 A/B) No.	Bolt ø (in inches)	L
24 x 36	0.5 x 6.5 x 6.5	0.875	2.25	4 each	0.625	2'-6"
36 x 54	0.5 x 7.5 x 7.5	0.875	2.75	4 each	0.625	2'-6"
48 x 72	0.5 x 7.5 x 7.5	0.875	2.75	4 each	0.625	2'-6"
60 x 90	0.75 x 11 x 11	1	3.5	4 each	0.75	2'-6"
72 x 108	0.75 x 11 x 11	1.125	3.5	4 each	0.875	2'-6"

2) Sign assembly for direct embedment

Symbol Size (in inches)	Panels size W x H 0.125" thick (in inches)	Posts (TS) Square tube 0.25" wall (in inches)	Support L- rails 0.25" thick (in inches)	Layout A (in inches)	B	C	D	E	Footing size L x W x Depth	Holes for footing
20	24 x 36	1–TS 2 x 2	L-2 x 2	28	4	12	na	na	2'- 0" x 2'- 0" x 4'- 0"	1
30	36 x 54	1–TS 3 x 3	L-2 x 2	38	8	18	na	na	2'- 0" x 2'- 0" x 4'- 0"	1
40	48 x 72	2–TS 3 x 3	L-2 x 2	48	12	8	32	na	4'- 0" x 2'- 0" x 4'- 0"	1
50	60 x 90	2–TS 4 x 4	L-2 x 2	na	12	9	42	33	5'- 0" x 2'- 0" x 4'- 0"	1
60	72 x 108	2–TS 4 x 4	L-2 x 2	na	12	12	48	42	5'- 6" x 2'- 0" x 4'- 0"	1

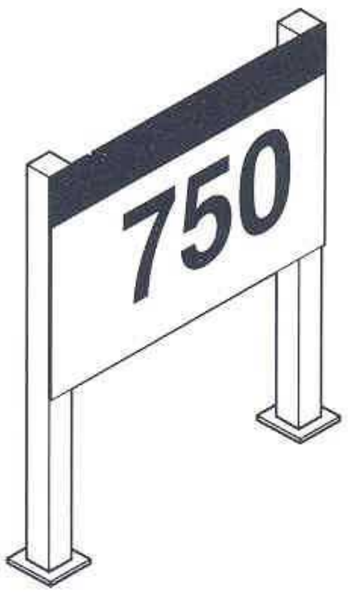

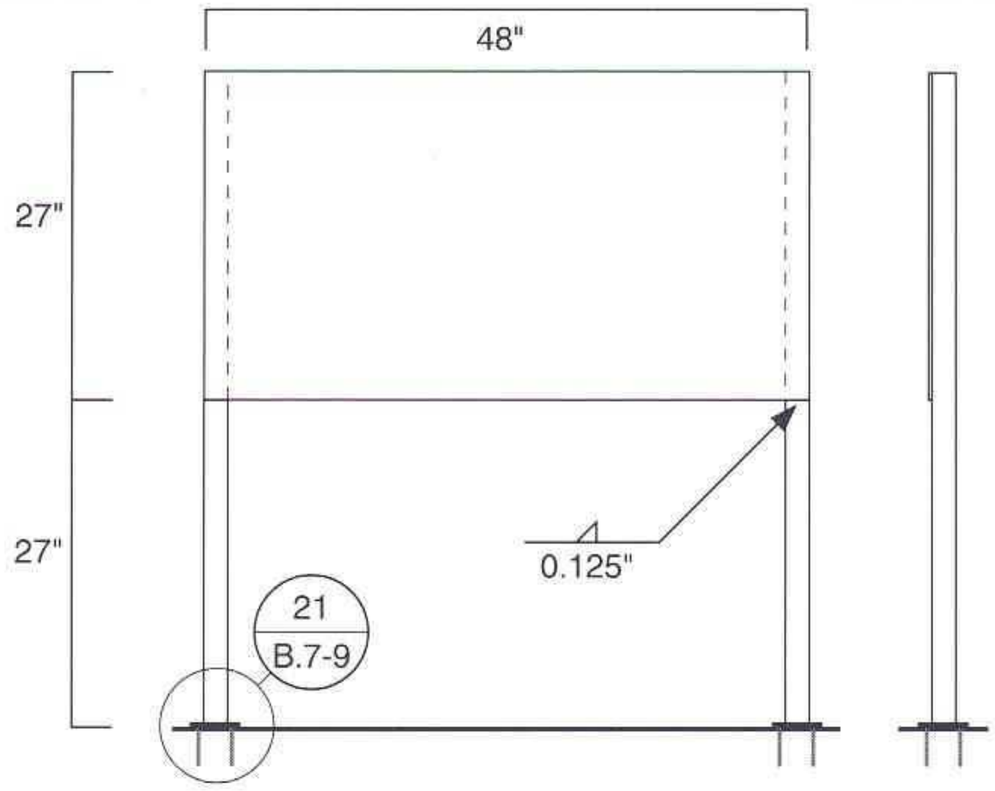

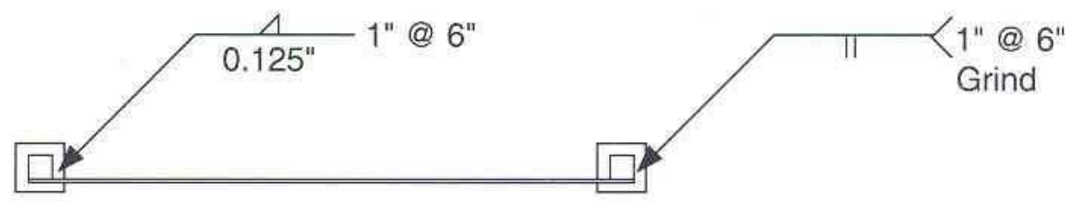

WLI-12

NOTE: All fabrication specifications are common for both standard sizes: A=9" (36"x 20.25"), and A=12" (48"x 27").

Scale:	0.5" = 1'
Sign page:	14.28
Legend size (A):	12"
Panel size:	48" x 27" x 0.190
Post size:	3" x 3" x 0.25" (6061-T6)
L-rail/bracket:	None
Base plate:	6.5" x 6.5" x 0.5"
Anchor bolts:	0.5"ø x 4.25" embedment Stainless Steel HILTI HVA (or equal)
Footing:	Existing concrete
Rebar:	None

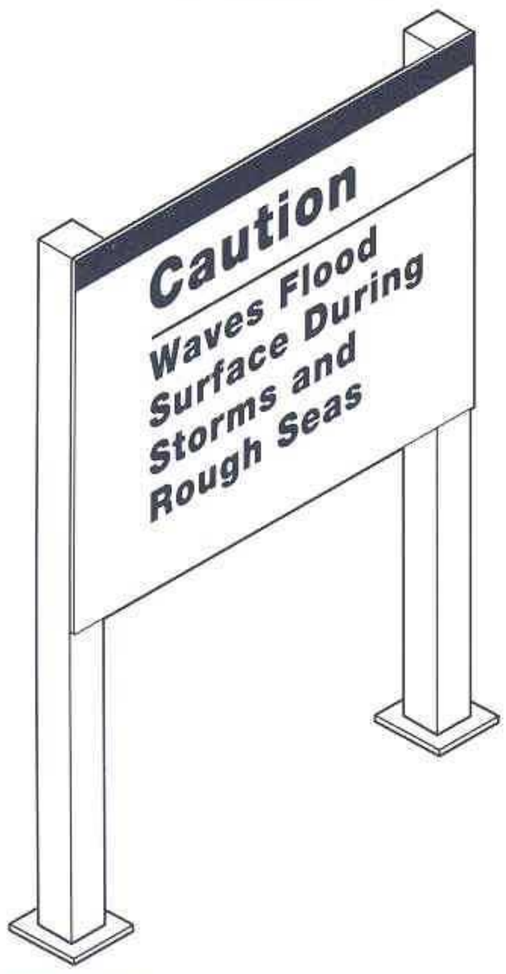

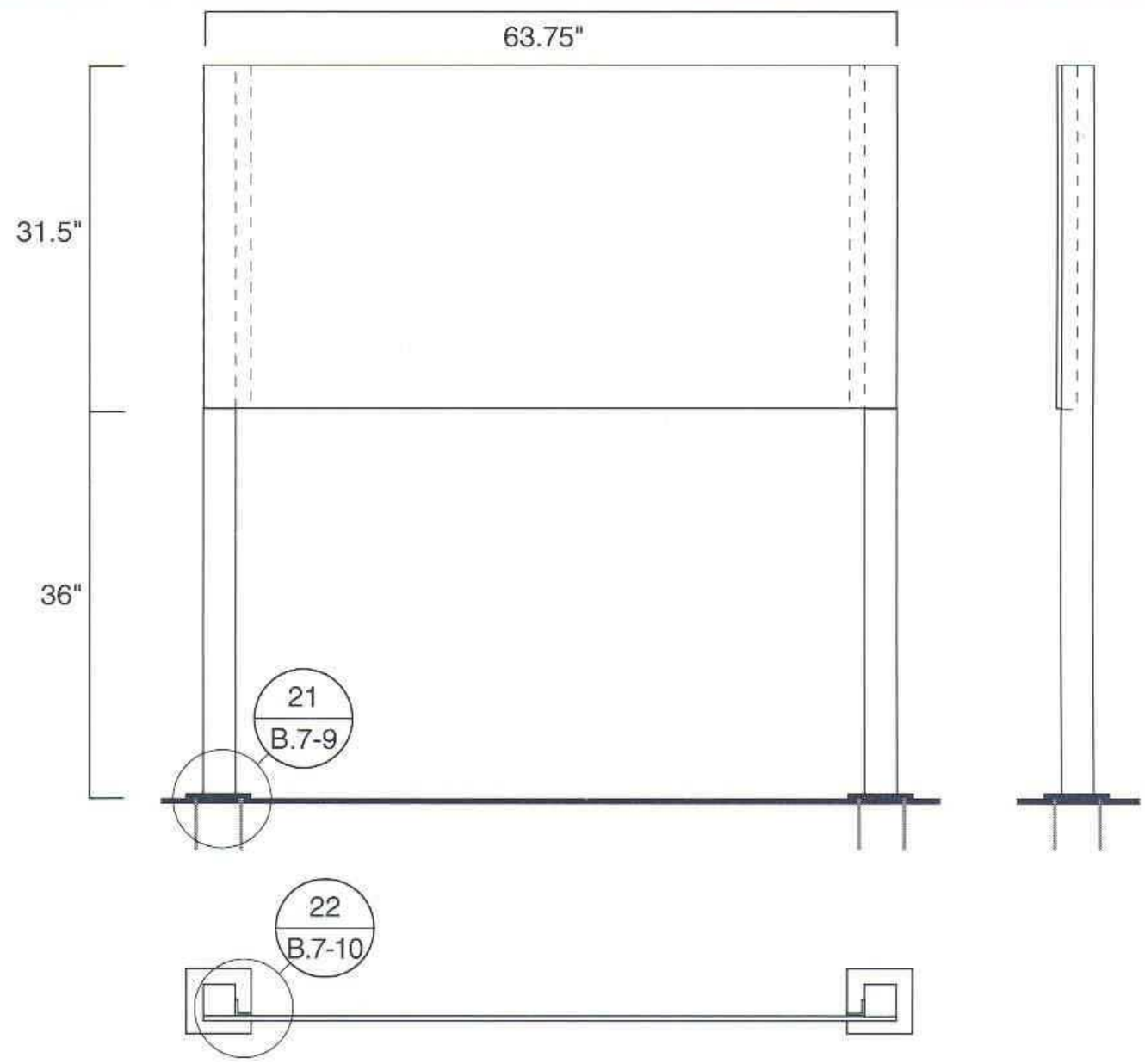

WLI-26

Scale:	0.5" = 1'
Sign page:	14.40
Legend size (A):	2"
Panel size:	42.5" x 21" x 0.190
Post size:	TS 3" x 3" x 0.25"
L-rail/bracket:	2" x 2" x 0.25" (6061-T6)
Base plate:	7.5" x 7.5" x 0.5"
Anchor bolts:	0.5"ø x 4.25" embedment Stainless Steel HILTI HVA (or equal)
Footing:	Existing concrete

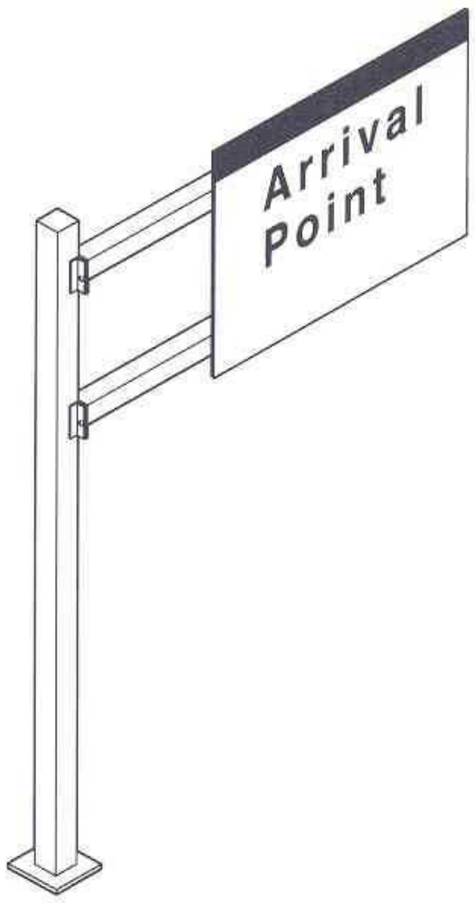

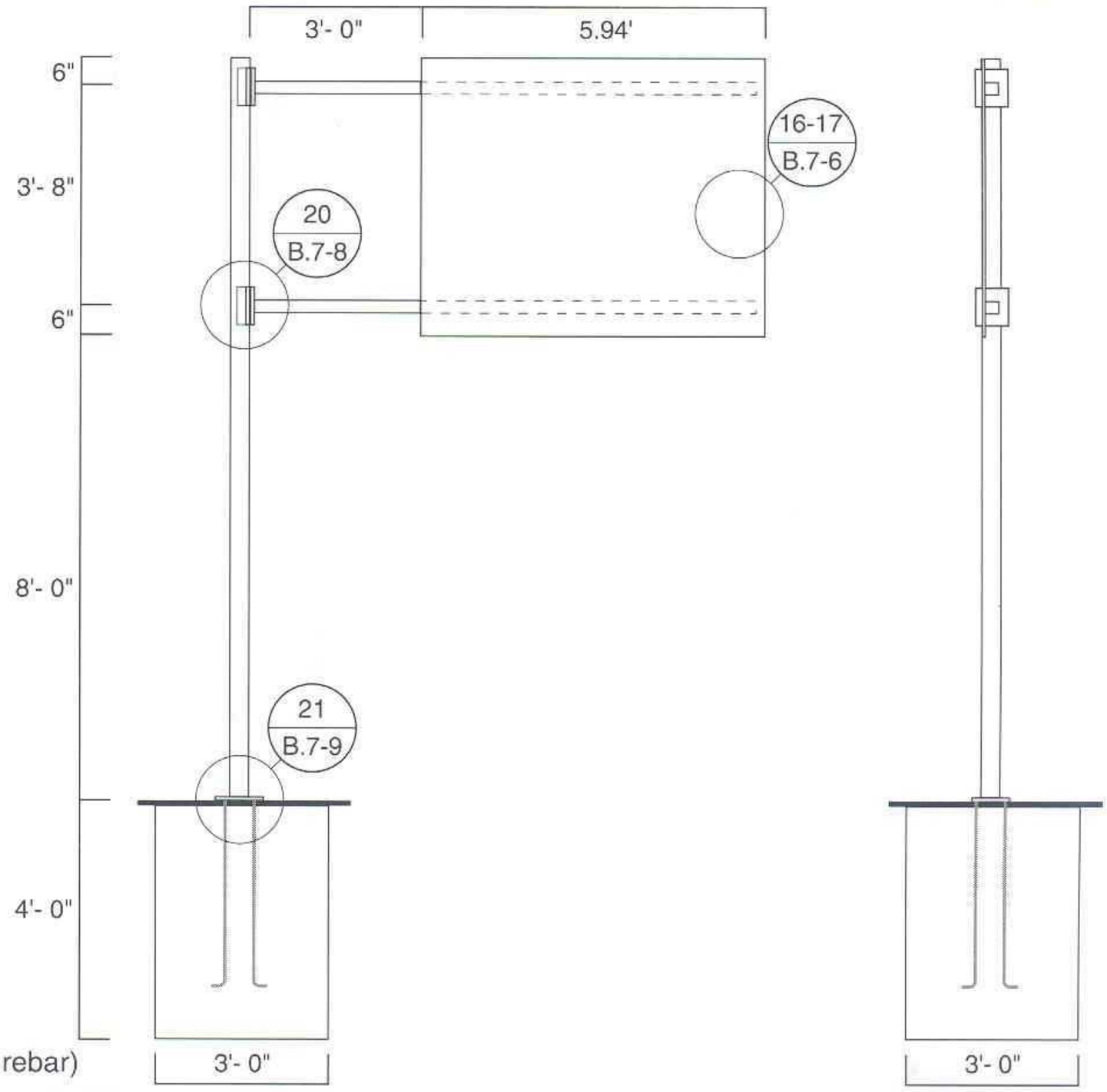

WLI-5

Scale:	0.25" = 1'
Sign page:	14.24
Legend size (A):	8"
Panel size:	71.25" x 57.5" x 0.125"
Post size:	TS 4" x 4" x 0.25"
Cantilever size:	TS 3" x 3" x 0.25"
L-bracket:	3" x 3" x 0.25"
Base plate:	11" x 11" x 0.75"
Anchor bolts:	0.75"ø x 3'- 0" A36
Footing:	3'- 0" x 4'- 0" x 3'- 0" (No rebar)

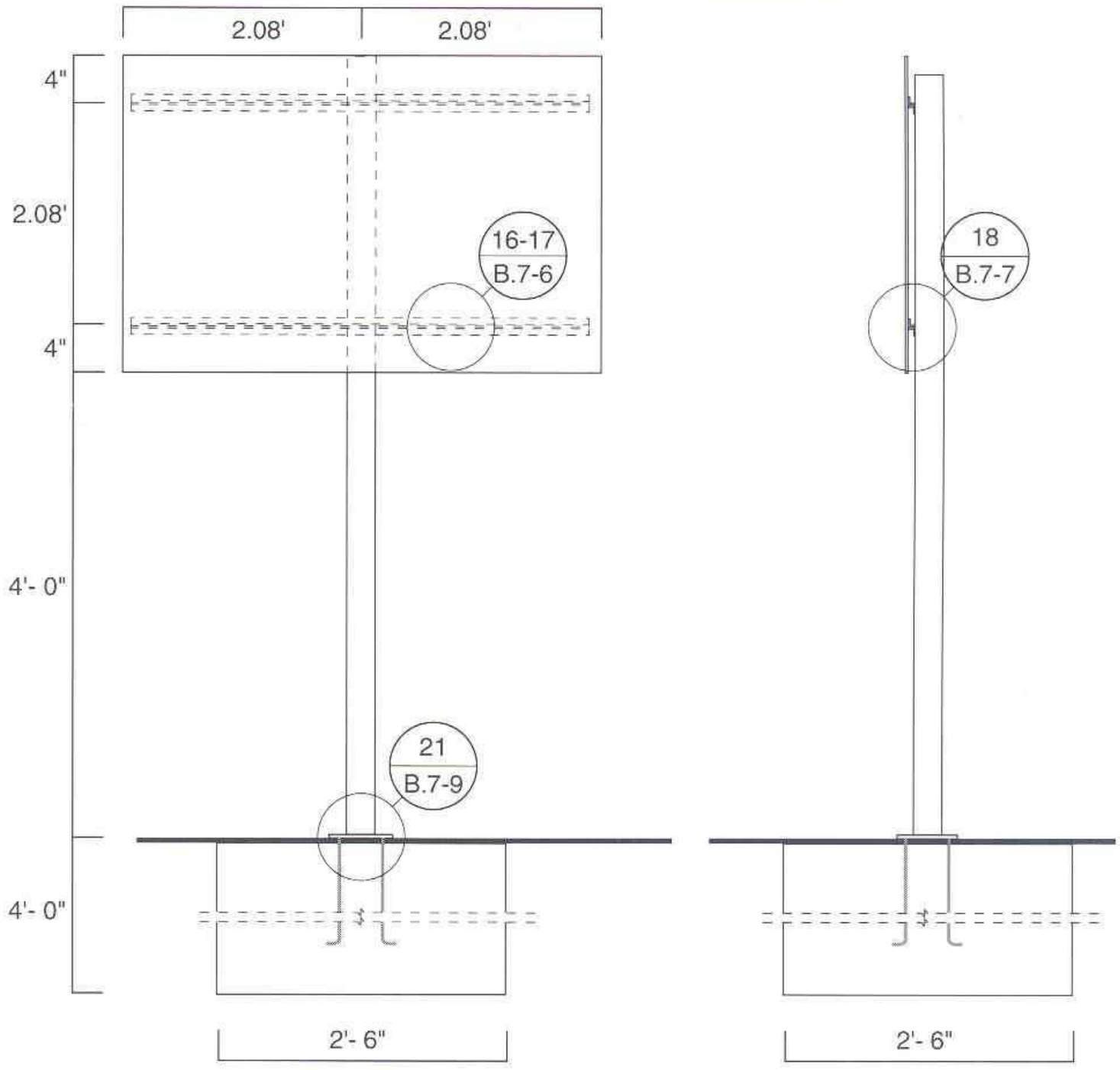

WDA-21

Scale:	0.5" = 1'
Sign page:	14.15
Legend size (A):	3"
Panel size:	49.875" x 33" x 0.125"
Post size:	TS 3" x 3" x 0.25"
L-rail/bracket:	2.5"x2.5" x 0.25"
Base plate:	11" x 11" x 0.625"
Anchor bolts:	0.625"ø x 2'- 6" A36
Footing:	2'- 6" x 4'- 0" x 2'- 6"
Rebar:	None

WLI-6/WLI-7

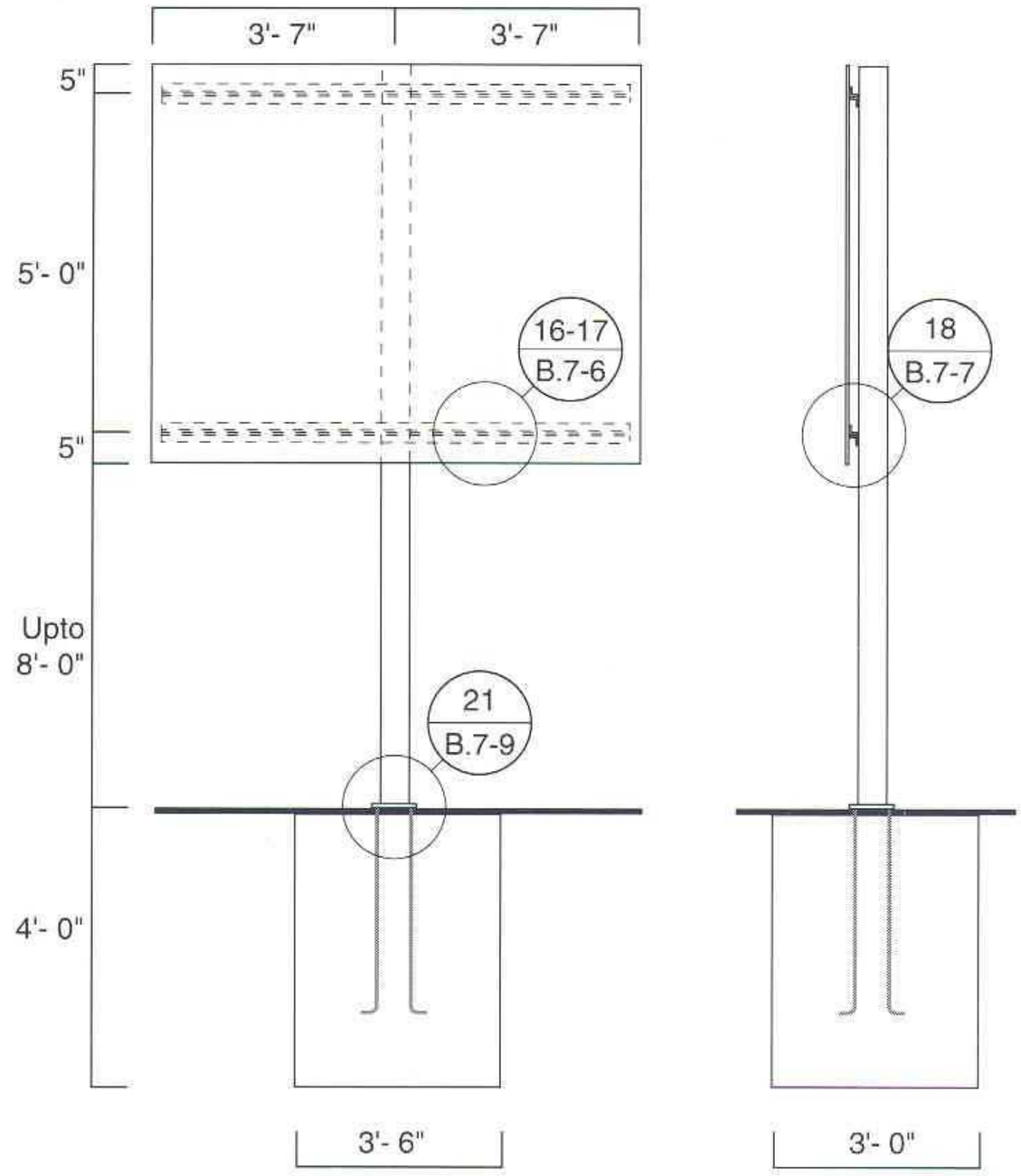

Scale:	0.25" = 1'
Sign page:	14.25
Legend size (A):	8"
Panel size:	86" x 70" x 0.190"
Post size:	TS 5" x 5" x 0.25"
L-rail/bracket:	3" x 3" x 0.25"
Base plate:	14" x 14" x 1"
Anchor bolts:	1"ø x 3'- 0" A36
Footing:	3'- 0" x 4'- 0" x 3"- 6"
Rebar:	None

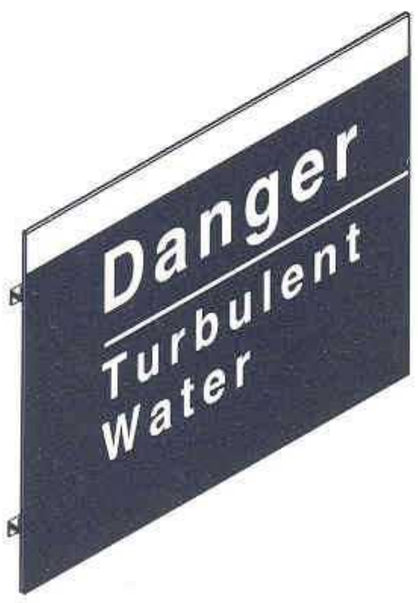

WDA-3

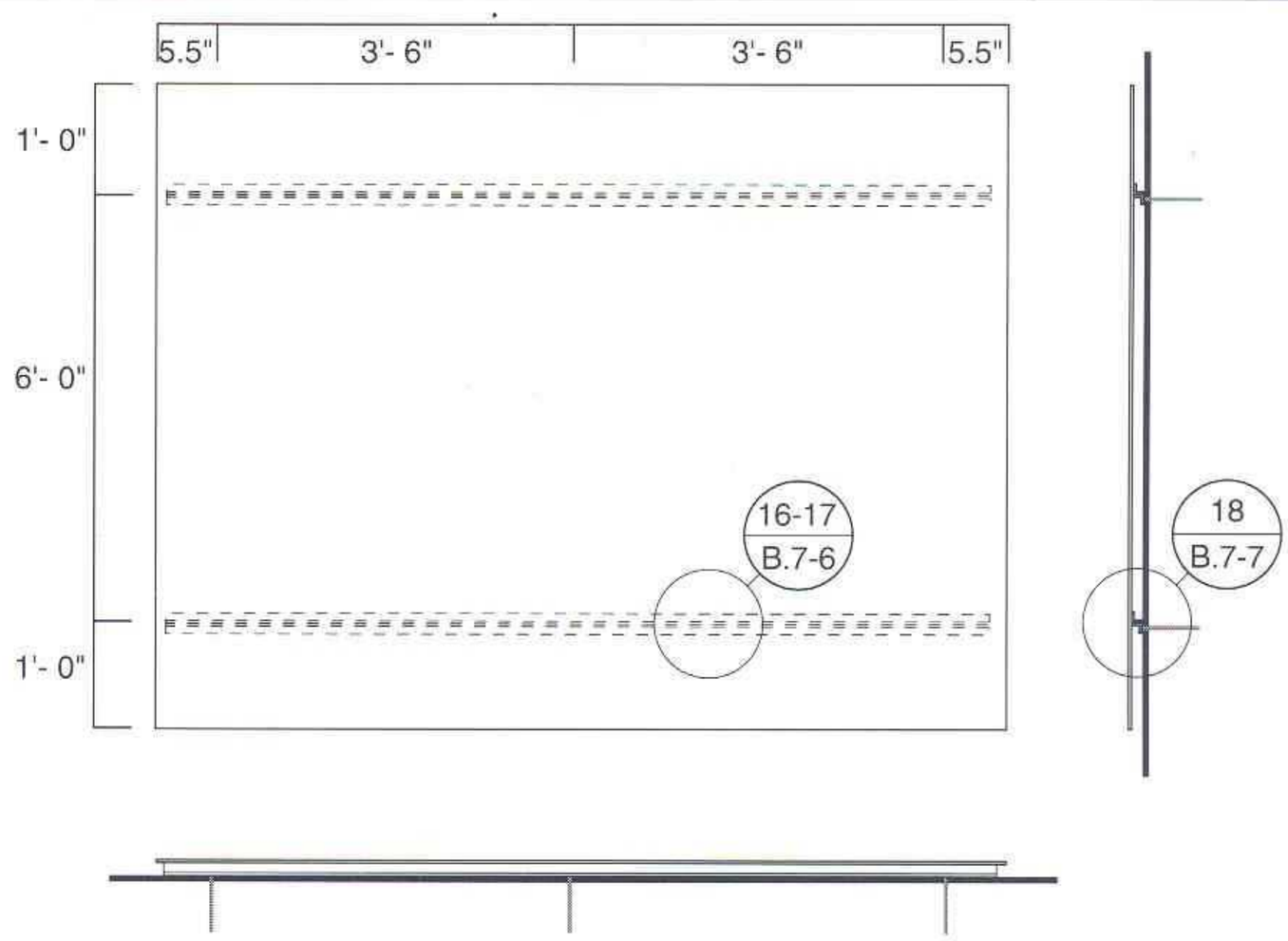

Scale:	0.375" = 1'
Sign page:	14.17
Legend size (A):	8"
Panel size:	95" x 96" x 0.190"
Post size:	None
L-rails:	4" x 3" x 0.25" (LLH) (Both rails aluminum)
Base plate:	None
Anchor bolts:	3-0.5"ø x 4.25" embedment Stainless Steel HILTI HVA (or equal)
Footing:	None
Rebar:	None

WLI-1/2/3/4

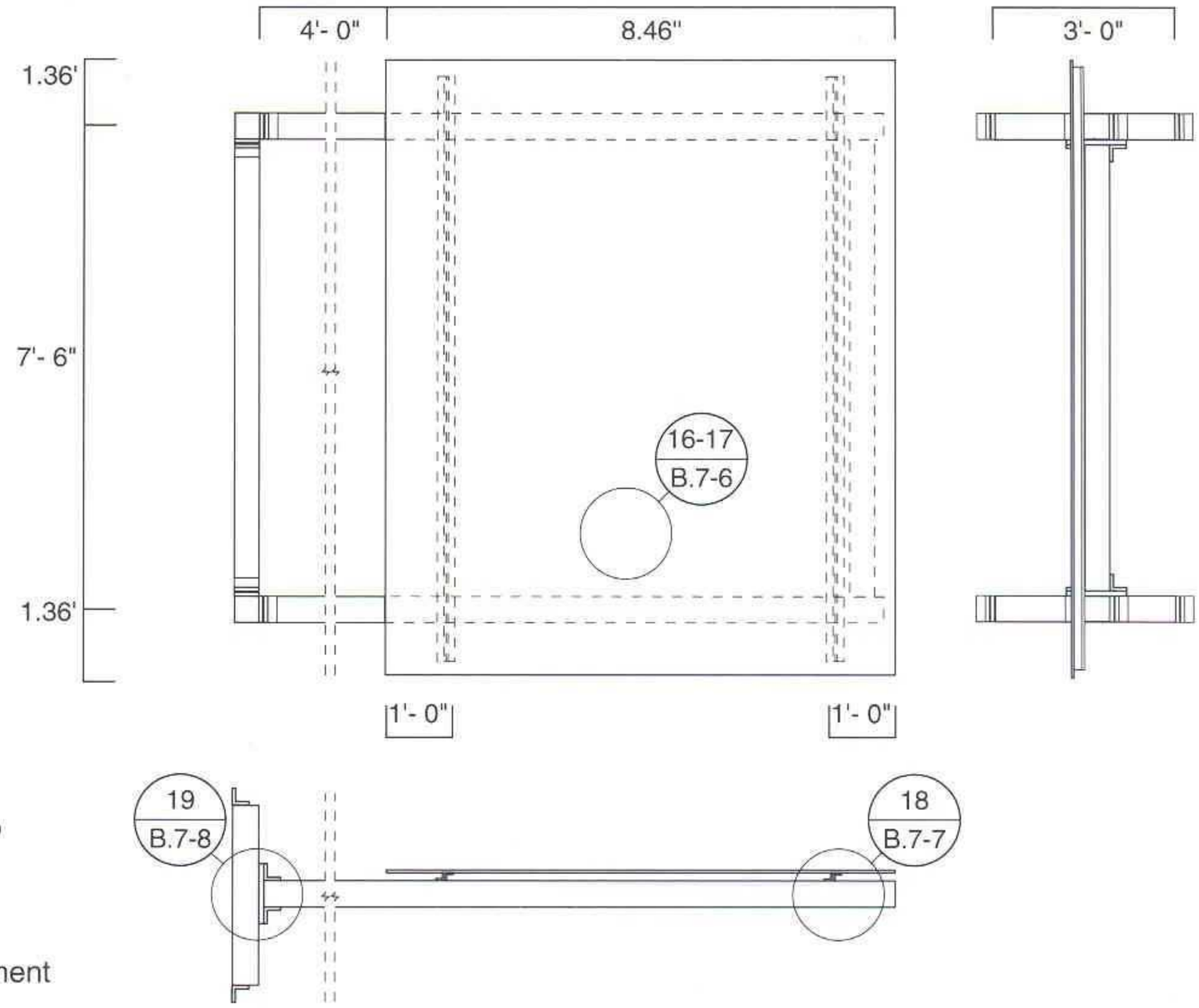

Scale:	0.25" = 1'
Sign page:	14.23
Legend size (A):	14"
Panel size:	101.5" x 122.5" x 0.190"
Tube size:	TS 5" x 5" x 0.25"
L-rail/bracket:	3" x 3" x 0.25"
Base plate:	None
Anchor bolts:	0.75"ø x 6.625" embedment Stainless Steel HILTI HVA (or equal)
Footing:	None
Rebar:	None