APPENDIX A

RAILROAD LAYOUT DATA

The tables and figures listed below are based on the use of: (a) 4-foot 8-1/2 inch gage, (b) No. 8 frog, 13 feet long, theoretical heel distance of 8 feet 3 inches, and (c) 68-foot lead distance. If other types of turnouts are used, mathematical calculations will be necessary in lieu of these tables and figures.

- Figure A-1 shows basic layout data for No. 8 turnouts and components.

- Figures A-2 and A-2(a) (with tables A-1 through A-6) show dimensions for minimum trackage in layouts where parallel tracks at various centers are reached over curved entrance tracks.

- Figure A-3 shows spacing of frogs in crossovers between parallel tracks in which the crossover track is on reversed curves with sufficient tangent between curves to adjust the locomotive wheel base.

- Figure A-4 (with table A-7) shows essential dimensions for ladder and yard tracks where the ladder must be on a curve. In the table, all curvature is taken up in the turnout leads, the distance between frogs being the chord distance subtended by the frog angle. The formula on figure A-4 can be used for any combination of ladder curvature and turnout spacing.

- Figure A-5 shows essential dimensions for two types of railroad yard ladders.

- Table A-8 is a tabulation of material required for 1,000 feet of track.

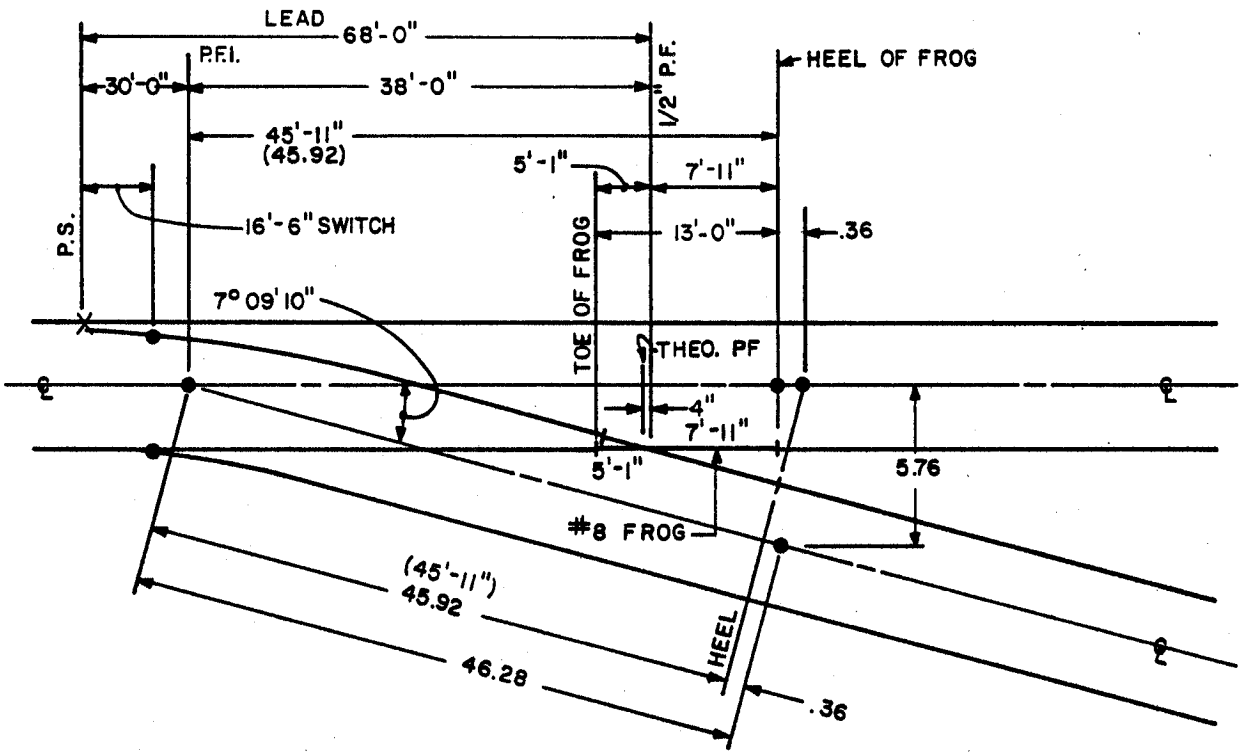

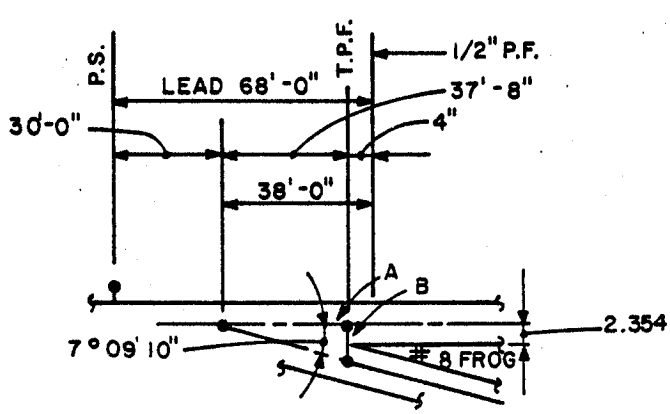

NOT TO SCALE

$$\text{TAN } 7^\circ 09' 10'' = \frac{B}{A} = \frac{2.354 + 2.372}{A}$$

A=37.67 OR 37'-8"

U. S. Army Corps of Engineers

FIGURE A-1. BASIC DATA FOR STANDARD NO. 8 TURNOUT GAGE 4 FEET 8 1/2 INCHES; FROG LENGTH 13 FEET

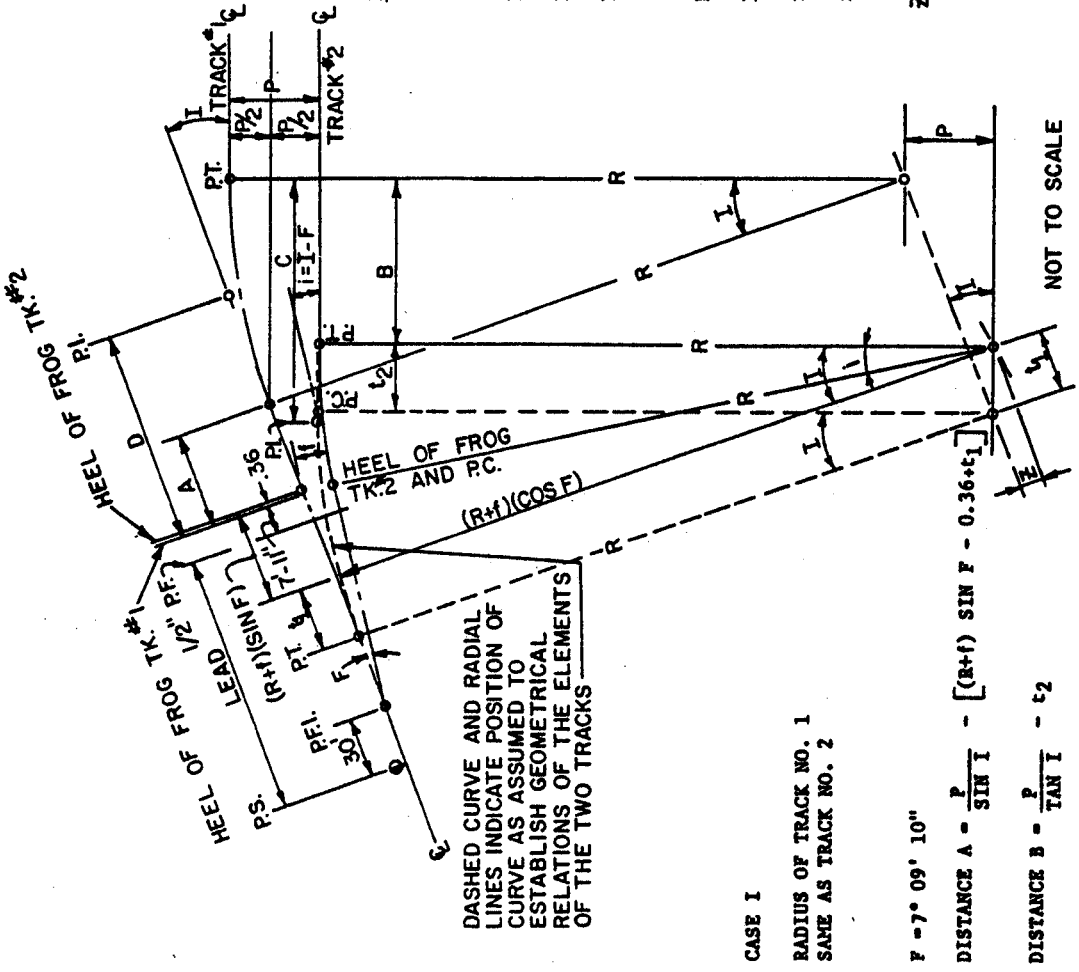

FORMULA AND PROCEDURE FOR DETERMINING THE MOST ECONOMICAL YET SATISFACTORY LAYOUT FOR CURVED ENTRANCE TRACKS TO FACILITIES WHERE BOTH TRACKS HAVE THE SAME DEGREE OF CURVATURE OR CURVATURE OF TRACK NO. 2 IS OF GREATER RADIUS THAN TRACK NO. 1. TABLES A-1 THROUGH A-6 RELATE TO THIS FIGURE.

KNOWN FACTORS ARE:

F = FROG ANGLE (NO. 8 USED HERE HAVING AN ANGLE OF 7° -09' -10" AND A THEORETICAL HEEL DISTANCE OF 8' - 3")

LEAD = DISTANCE FROM 1/2" POINT OF FROG TO P.S. = L

R = RADIUS OF CURVES OF TRACKS

P = CENTER TO CENTER OF TRACKS

REQUIRED:

I = CENTRAL ANGLE OF TRACK NO. I

i = CENTRAL ANGLE OF TRACK NO. 2 = I-F

f = 5.76 FOR NO. 8 FROG 8'-3" THEORETICAL HEEL DISTANCE.

$Z = [(R+f) \cos F] - R$

= 0.0 FOR 7° - 50' CURVE

= 1.2526 FOR 10° CURVE

= 1.9947 FOR 12° CURVE

= 2.5244 FOR 14° CURVE

t_2 = TANGENTIAL CORRECTION $\frac{Z}{\sin I}$

t_1 = TANGENTIAL CORRECTION $\frac{Z}{\tan I}$

CASE I

RADIUS OF TRACK NO. 1
SAME AS TRACK NO. 2

F = 7° 09' 10"

DISTANCE A = $\frac{P}{\sin I} - [(R+f) \sin F - 0.36 + t_1]$

DISTANCE B = $\frac{P}{\tan I} - t_2$

DISTANCE C = TANG. DISTANCE TK. NO. 2+B

DISTANCE D = TANG. DISTANCE TK. NO. 1+A

U. S. Army Corps of Engineers

FIGURE A-2 RAILROAD LAYOUT DATA

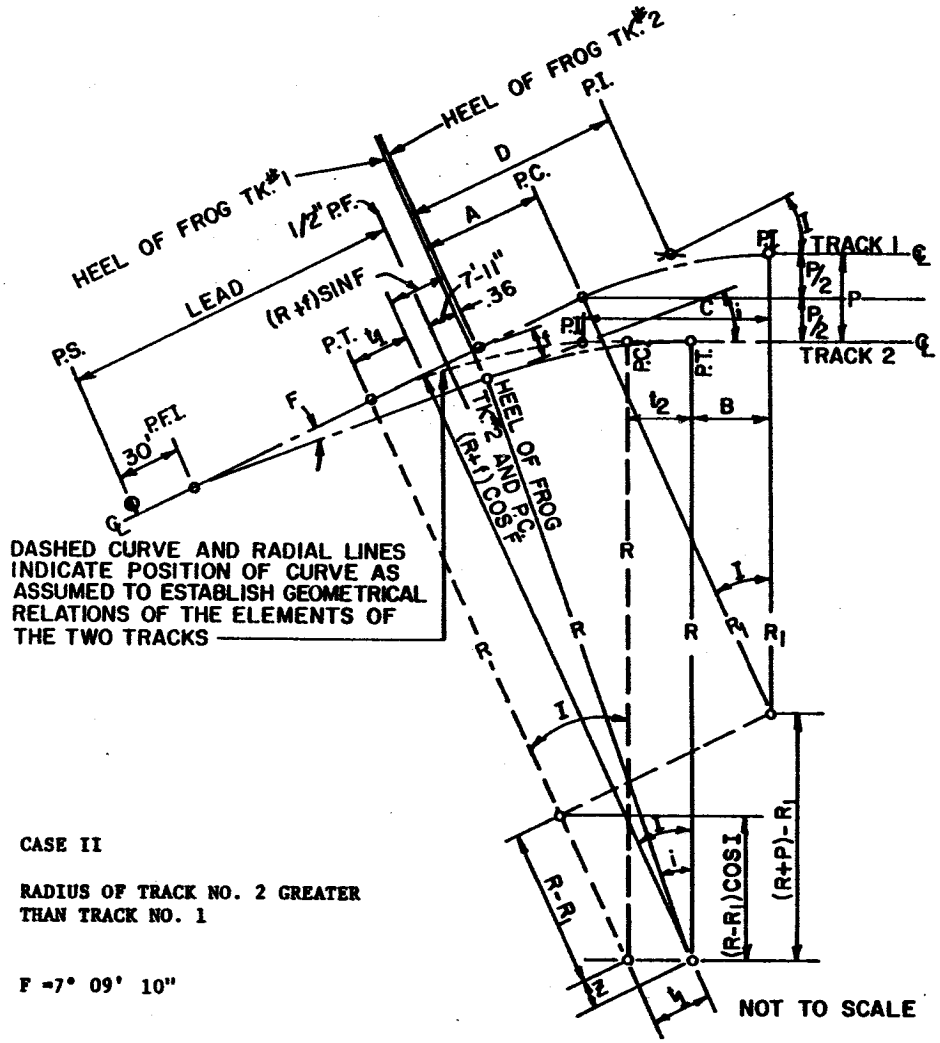

DASHED CURVE AND RADIAL LINES INDICATE POSITION OF CURVE AS ASSUMED TO ESTABLISH GEOMETRICAL RELATIONS OF THE ELEMENTS OF THE TWO TRACKS

CASE II

RADIUS OF TRACK NO. 2 GREATER THAN TRACK NO. 1

F =7° 09' 10"

DISTANCE A = $\frac{[(R+P)-R_1] - [(R-R_1)\cos I]}{\sin I} - [(R+f)\sin F - 0.36 + t_1]$

DISTANCE B = $\frac{[(R+P)-R_1] - [(R-R_1)\cos I]}{\sin I} [\cos I\,(R-R_1)\sin I - t_2]$

DISTANCE C = TANG DISTANCE TK. NO. 2+B

DISTANCE D = TANG DISTANCE TK. NO. 1+A

FORMULA AND PROCEDURE FOR DETERMINING THE MOST ECONOMICAL YET SATISFACTORY LAYOUT FOR CURVED ENTRANCE TRACKS TO FACILITIES WHERE BOTH TRACKS HAVE THE SAME DEGREE OF CURVATURE OR CURVATURE OF TRACK NO. 2 IS OF GREATER RADIUS THAN TRACK NO. 1. TABLES A-1 THROUGH A-6 RELATE TO THIS FIGURE.

KNOWN FACTORS ARE:

F = FROG ANGLE (NO. 8 USED HERE HAVING AN ANGLE OF 7° - 09' - 10" AND A THEORETICAL HEEL DISTANCE OF 8' - 3")

LEAD = DISTANCE FROM 1/2" POINT OF FROG TO P.S. = L

R = RADIUS OF CURVES OF TRACKS

P = CENTER TO CENTER OF TRACKS

REQUIRED:

I = CENTRAL ANGLE OF TRACK NO. 1

i = CENTRAL ANGLE OF TRACK NO. 2 = I-F

f = 5.76 FOR NO. 8 FROG 8'-3" THEORETICAL HEEL DISTANCE

z = $[(R+F)\cos F] - R$

= 0.0 FOR 7°-50' CURVE

= 1.2526 FOR 10° CURVE

= 1.9947 FOR 12° CURVE

= 2.5244 FOR 14° CURVE

t_2 = TANGENTIAL CORRECTION $\frac{z}{\sin I}$

t_1 = TANGENTIAL CORRECTION $\frac{z}{\tan I}$

FIGURE A-2a RAILROAD LAYOUT DATA

Table A-1. Minimum Track and Operating Movement
Case I - Reference Figure A-2
R = 573.69', D = 10°, Turnouts No. 8

P. ft.	I. degrees	Track No. 1		Track No. 2		Total-ft.		Total track ft
		A-ft.	L-ft.	B-ft.	L-ft.	Track 1	Track 2	
13	8°38′	6.57	86.33	77.28	14.80	92.90	92.08	184.98
14	8°58′	10.16	89.60	80.75	18.07	99.76	98.82	198.58
15	9°16′	13.61	92.75	84.08	21.22	106.36	105.30	211.66
16	9°35′	16.93	95.80	87.28	24.27	112.73	111.55	224.28
17	9°53′	20.13	98.75	90.35	27.22	118.88	117.57	236.45
18	10°10′	23.25	101.62	93.32	30.09	124.87	123.41	248.28
19	10°26′	26.25	104.41	96.19	32.88	130.66	129.07	259.73
20	10°43′	29.17	107.14	98.97	35.61	136.31	134.58	270.89
21	10°59′	32.03	109.79	101.67	38.26	141.82	139.93	281.75
22	11°14′	34.79	112.38	104.30	40.85	147.17	145.15	292.32
23	11°29′	37.50	114.91	106.85	43.38	152.41	150.23	302.64
24	11°44′	40.14	117.39	109.33	45.86	157.53	155.19	312.72
25	11°59′	42.73	119.83	111.76	48.30	162.56	160.06	322.62
26	12°13′	45.26	122.21	114.13	50.68	167.47	164.81	332.28
27	12°27′	47.74	124.54	116.44	53.01	172.28	169.45	341.73
28	12°41′	50.16	126.84	118.70	55.31	177.00	174.01	351.01
29	12°55′	52.55	129.09	120.92	57.56	181.64	178.48	360.12
30	13°08′	54.90	131.31	123.09	59.78	186.21	182.87	369.08
31	13°21′	57.20	133.49	125.22	61.96	190.69	187.18	377.87
32	13°34′	59.47	135.64	127.30	64.11	195.11	191.41	386.52
33	13°46′	61.69	137.75	129.35	66.22	199.44	195.57	395.01
34	13°59′	63.89	139.83	131.35	68.30	203.72	199.65	403.37
35	14°11′	66.05	141.88	133.33	70.35	207.93	203.68	411.61
36	14°23′	68.18	143.91	135.27	72.38	212.09	207.65	419.74
37	14°35′	70.28	145.90	137.17	74.37	216.18	211.54	427.72
38	14°47′	72.36	147.87	139.05	76.34	220.23	215.39	435.62
39	14°59′	74.40	149.81	140.89	78.28	224.21	219.17	443.38
40	15°10′	76.41	151.73	142.72	80.20	228.14	222.92	451.06
45	16°06′	86.14	161.00	151.39	89.47	247.14	240.86	488.00
50	16°59′	95.35	169.83	159.49	98.30	265.18	257.79	522.97
55	17°49′	104.11	178.12	167.09	106.59	282.23	273.68	555.91
60	18°37′	112.49	186.11	174.25	114.58	298.60	288.83	587.43
65	19°23′	120.55	193.78	181.03	122.25	314.33	303.28	617.61
70	20°07′	128.31	201.17	187.49	129.64	329.48	317.13	646.61
75	20°50′	135.83	208.31	193.60	136.78	344.14	330.48	674.52
80	21°31′	143.10	215.22	199.45	143.69	358.32	343.14	701.46

U. S. Army Corps of Engineers

Table A-2. Minimum Track and Operating Movement

Case I - Reference Figure A-2

R = 478.34', D = 12°, Turnouts No. 8

P. ft.	I. degrees	Track No. 1		Track No. 2		Total-ft.		Total track ft.
		A-ft.	L-ft.	B-ft.	L-ft.	Track 1	Track 2	
13	9°27′	7.23	78.80	65.91	19.19	86.03	85.10	171.13
14	9°49′	10.68	81.78	69.23	22.17	92.46	91.40	183.86
15	10°10′	14.00	84.66	72.40	25.05	98.66	97.45	196.11
16	10°30′	17.17	87.45	75.43	27.84	104.62	103.27	207.89
17	10°49′	20.22	90.14	78.34	30.53	110.36	108.87	219.23
18	11°08′	23.17	92.79	81.15	33.18	115.96	114.33	230.29
19	11°26′	26.03	95.32	83.85	35.71	121.35	119.56	240.91
20	11°44′	28.81	97.80	86.46	38.19	126.61	124.65	251.26
21	12°02′	31.49	100.23	89.00	40.62	131.72	129.62	261.34
22	12°19′	34.12	102.59	91.45	42.98	136.71	134.43	271.14
23	12°35′	36.66	104.91	93.84	45.30	141.57	139.14	280.81
24	12°52′	39.17	107.18	96.16	47.57	146.35	143.73	290.08
25	13°08′	41.61	109.39	98.42	49.78	151.00	148.20	299.20
26	13°23′	43.98	111.57	100.63	51.96	155.55	152.59	308.14
27	13°39′	46.32	113.71	102.76	54.10	160.03	156.86	316.89
28	13°54′	48.61	115.80	104.87	56.19	164.41	161.06	325.47
29	14°09′	50.85	117.86	106.92	58.25	168.71	165.17	333.88
30	14°23′	53.04	119.89	108.93	60.28	172.93	169.21	342.14
31	14°38′	55.21	121.88	110.89	62.27	177.09	173.16	350.25
32	14°52′	57.34	123.84	112.82	64.23	181.18	177.05	358.23
33	15°06′	59.43	125.77	114.70	66.16	185.20	180.86	366.06
34	15°19′	61.48	127.68	116.55	68.07	189.16	184.62	373.78
35	15°33′	63.50	129.55	118.37	69.94	193.05	188.31	381.36
36	15°46′	65.50	131.40	120.15	71.79	196.90	191.94	388.84
37	15°59′	67.46	133.22	121.90	73.61	200.68	195.51	396.19
38	16°12′	69.39	135.03	123.62	75.42	204.42	199.04	403.46
39	16°25′	71.31	136.80	125.31	77.19	208.11	202.50	410.61
40	16°38′	73.19	138.56	126.98	78.95	211.75	205.93	417.68
45	17°39′	82.28	147.03	134.91	87.42	229.31	222.33	451.64
50	18°36′	90.86	155.05	142.27	95.44	245.91	237.71	483.62
55	19°31′	99.03	162.69	149.15	103.08	261.72	252.23	513.95
60	20°24′	106.85	170.00	155.61	110.39	276.85	266.00	542.85
65	21°15′	114.35	177.09	161.71	117.47	291.44	279.18	570.62
70	22°03′	121.59	183.75	167.48	124.14	305.34	291.62	596.96
75	22°50′	128.57	190.32	172.94	130.91	319.09	303.85	622.94
80	23°36′	135.35	196.65	178.15	137.04	332.00	315.19	647.19

U. S. Army Corps of Engineers

Table A-3. Minimum Track and Operating Movement

Case I - Reference Figure A-2

R = 410.28', D = 14°, Turnouts No. 8

P. ft.	L. degrees	Track No. 1		Track No. 2		Total-ft.		Total track ft.
		A-ft.	L-ft.	B-ft.	L-ft.	Track 1	Track 2	
13	10°13′	7. 87	72. 95	57. 92	21. 86	80. 82	79. 78	160. 60
14	10°36′	11. 16	75. 71	61. 13	24. 62	86. 87	85. 75	172. 62
15	10°58′	14. 35	78. 37	64. 11	27. 28	92. 72	91. 39	184. 11
16	11°20′	17. 38	80. 95	66. 99	29. 86	98. 33	96. 85	195. 18
17	11°41′	20. 30	83. 45	69. 75	32. 36	103. 75	102. 11	205. 86
18	12°01′	23. 12	85. 88	72. 40	34. 79	109. 00	107. 19	216. 19
19	12°22′	25. 83	88. 24	74. 95	37. 15	114. 07	112. 10	226. 17
20	12°41′	28. 48	90. 54	77. 42	39. 45	119. 02	116. 87	235. 89
21	12°59′	31. 04	92. 79	79. 80	41. 70	123. 83	121. 50	245. 33
22	13°18′	33. 53	94. 98	82. 11	43. 89	128. 51	126. 00	254. 51
23	13°36′	35. 95	97. 14	84. 39	46. 05	133. 09	130. 44	263. 53
24	13°53′	38. 31	99. 23	86. 53	48. 14	137. 54	134. 67	272. 21
25	14°11′	40. 62	101. 28	88. 64	50. 19	141. 90	138. 83	280. 73
26	14°28′	42. 88	103. 30	90. 71	52. 21	146. 18	142. 92	289. 10
27	14°44′	45. 08	105. 28	92. 71	54. 19	150. 36	146. 90	297. 26
28	15°01′	47. 25	107. 22	94. 67	56. 13	154. 47	150. 80	305. 27
29	15°17′	49. 37	109. 13	96. 59	58. 04	158. 50	154. 63	313. 13
30	15°32′	51. 45	111. 01	98. 46	59. 92	162. 46	158. 38	320. 84
31	15°48′	53. 49	112. 85	100. 28	61. 76	166. 34	162. 04	328. 38
32	16°03′	55. 50	114. 67	102. 07	63. 58	170. 17	165. 65	335. 82
33	16°18′	57. 47	116. 46	103. 83	65. 37	173. 93	169. 20	343. 13
34	16°33′	59. 41	118. 22	105. 54	67. 13	177. 63	171. 67	350. 30
35	16°48′	61. 32	119. 96	107. 23	68. 87	181. 28	176. 10	357. 38
36	17°02′	63. 20	121. 67	108. 88	70. 58	184. 87	179. 46	364. 33
37	17°16′	65. 06	123. 36	110. 50	72. 27	188. 42	182. 77	371. 19
38	17°30′	66. 89	125. 04	112. 09	73. 95	191. 93	186. 04	377. 97
39	17°44′	68. 69	126. 69	113. 65	75. 60	195. 38	189. 25	384. 63
40	17°58′	70. 47	128. 31	115. 19	77. 22	198. 78	192. 41	391. 19
45	19°04′	79. 03	136. 16	122. 50	85. 07	215. 19	207. 57	422. 76
50	20°06′	87. 12	143. 61	129. 25	92. 52	230. 73	221. 77	452. 50
55	21°06′	94. 81	150. 69	135. 55	99. 60	245. 50	235. 15	480. 65
60	22°03′	102. 17	157. 48	141. 43	106. 39	259. 65	247. 82	507. 47
65	22°58′	109. 23	163. 99	146. 97	112. 90	273. 22	259. 87	533. 09
70	23°50′	116. 05	170. 27	152. 18	119. 18	286. 32	271. 36	557. 68
75	24°41′	122. 63	176. 34	157. 11	125. 25	298. 97	282. 36	581. 33
80	25°31′	129. 07	182. 22	161. 78	131. 13	311. 29	292. 91	604. 20

U. S. Army Corps of Engineers

Table A-4. Minimum Track and Operating Movement

Case II - Reference Figure A-2a

$R = 573.69'$, $R_1 = 478.34'$, $D = 10°$, $D_1 = 12°$, Turnouts No. 8

P. ft.	I. degrees	Track No. 1		Track No. 2		Total-ft.		Total track ft.
		A-ft.	L-ft.	B-ft.	L-ft.	Track 1	Track 2	
13	9°27′	7.71	78.80	62.55	23.03	86.51	85.58	172.09
14	9°49′	11.29	81.78	65.40	26.61	93.07	92.01	185.08
15	10°10′	14.74	84.66	68.13	30.06	99.40	98.19	197.59
16	10°30′	18.05	87.45	70.75	33.41	105.50	104.16	209.66
17	10°49′	21.26	90.14	73.27	36.65	111.40	109.92	221.32
18	11°08′	24.36	92.79	75.69	39.79	117.15	115.48	232.63
19	11°26′	27.38	95.32	78.04	42.83	122.70	120.87	243.57
20	11°44′	30.30	97.80	80.31	45.83	128.10	126.14	254.24
21	12°02′	33.15	100.23	82.51	48.74	133.38	131.25	264.63
22	12°19′	35.94	102.59	84.66	51.58	138.53	136.24	274.77
23	12°35′	38.64	104.91	86.72	54.36	143.55	141.08	284.63
24	12°52′	41.29	107.18	88.75	57.08	148.47	145.83	294.30
25	13°08′	43.89	109.39	90.72	59.74	153.28	150.46	303.74
26	13°23′	46.43	111.57	92.63	62.35	158.00	154.98	312.98
27	13°39′	48.91	113.71	94.51	64.92	162.62	159.43	322.05
28	13°54′	51.36	115.80	96.34	67.43	167.16	163.77	330.93
29	14°09′	53.75	117.86	98.12	69.91	171.61	168.03	339.64
30	14°23′	56.11	119.89	99.87	72.34	176.00	172.21	348.21
31	14°38′	58.42	121.88	101.60	74.73	180.30	176.33	356.63
32	14°52′	60.70	123.84	103.28	77.08	184.54	180.36	364.90
33	15°06′	62.94	125.77	104.92	79.40	188.71	184.32	373.03
34	15°19′	65.14	127.68	106.54	81.68	192.82	188.22	381.04
35	15°33′	67.31	129.55	108.12	83.93	196.86	192.05	388.91
36	15°46′	69.45	131.40	109.68	86.15	200.85	195.83	396.68
37	15°59′	71.57	133.22	111.21	88.34	204.79	199.55	404.34
38	16°12′	73.65	135.03	112.70	90.50	208.68	203.20	411.88
39	16°25′	75.71	136.80	114.18	92.63	212.51	206.81	419.32
40	16°38′	77.74	138.56	115.64	94.74	216.30	210.38	426.68
45	17°39′	87.54	147.03	122.56	104.90	234.57	227.46	462.03
50	18°36′	96.82	155.05	123.97	114.53	251.87	243.50	495.37
55	19°31′	105.67	162.69	134.97	123.70	268.36	258.67	527.03
60	20°24′	114.13	170.00	140.59	132.47	284.13	273.06	557.19
65	21°15′	122.28	177.02	145.88	140.89	299.30	286.77	586.07
70	22°03′	130.13	183.75	150.87	149.01	313.88	299.88	613.76
75	22°50′	137.73	190.32	155.59	156.86	328.05	312.45	640.50
80	23°36′	145.10	196.65	160.08	164.45	341.75	324.53	666.28

U. S. Army Corps of Engineers

Table A-5. Minimum Track and Operating Movement

Case II - Reference Figure A-2a

$R = 478.34'$, $R_1 = 410.28'$, $D = 12°$, $D_1 = 14°$, Turnouts No. 8

P. ft.	I. degrees	Track No. 1		Track No. 2		Total-ft.		Total track ft.
		A-ft.	L-ft.	B-ft.	L-ft.	Track 1	Track 2	
13	10°13′	8.41	72.95	54.83	25.50	81.36	80.33	161.69
14	10°36′	11.85	75.71	57.66	28.72	87.56	86.38	173.94
15	10°58′	15.14	78.37	60.35	31.83	93.51	92.18	185.69
16	11°20′	18.30	80.95	62.93	34.84	99.25	97.77	197.02
17	11°41′	21.35	83.45	65.40	37.75	104.80	103.15	207.95
18	12°01′	24.30	85.88	67.77	40.59	110.18	108.36	218.54
19	12°22′	27.15	88.24	70.06	43.34	115.39	113.40	228.79
20	12°41′	29.91	90.54	72.27	46.03	120.45	118.30	238.75
21	12°59′	32.61	92.79	74.41	48.65	125.40	123.06	248.46
22	13°18′	35.23	94.98	76.48	51.21	130.21	127.69	257.90
23	13°36′	37.78	97.14	78.49	53.71	134.92	132.20	267.12
24	13°53′	40.27	99.23	80.44	56.16	139.50	136.60	276.10
25	14°11′	42.71	101.28	82.34	58.56	143.99	140.90	284.89
26	14°28′	45.10	103.30	84.19	60.90	148.40	145.09	293.49
27	14°44′	47.43	105.28	85.99	63.22	152.71	149.21	301.92
28	15°01′	49.72	107.22	87.75	65.45	156.94	153.20	310.14
29	15°17′	51.97	109.13	89.47	67.71	161.10	157.18	318.28
30	15°32′	54.17	111.01	91.15	69.90	165.18	161.05	326.23
31	15°48′	56.33	112.85	92.79	72.06	169.18	164.85	334.03
32	16°03′	58.47	114.67	94.39	74.18	173.14	168.57	341.71
33	16°18′	60.56	116.46	95.96	76.26	177.02	172.22	349.24
34	16°33′	62.62	118.22	97.50	78.31	180.84	175.82	356.66
35	16°48′	64.65	119.96	99.01	80.35	184.61	179.36	363.97
36	17°02′	66.65	121.67	100.49	82.35	188.32	182.84	371.16
37	17°16′	68.63	123.36	101.96	84.32	191.99	186.28	378.27
38	17°30′	70.57	125.04	103.37	86.27	195.61	189.64	385.25
39	17°44′	72.49	126.69	104.77	88.19	199.18	192.96	392.14
40	17°58′	74.39	128.31	106.15	90.09	202.70	196.24	398.94
45	19°04′	83.52	136.16	112.69	99.25	219.68	211.94	431.62
50	20°06′	92.16	143.61	118.73	107.93	235.77	226.66	462.43
55	21°06′	100.39	150.69	124.34	116.20	251.08	240.54	491.62
60	22°03′	108.26	157.48	129.59	124.12	265.74	253.71	519.45
65	22°58′	115.82	163.99	134.50	131.72	279.81	266.22	546.03
70	23°50′	123.14	170.27	139.13	139.04	293.41	278.17	571.58
75	24°41′	130.20	176.34	143.49	146.12	306.54	289.61	596.15
80	25°31′	137.06	182.22	147.61	152.98	319.28	300.59	619.87

U. S. Army Corps of Engineers

Table A-6. Minimum Track and Operating Movement

Case II - Reference Figure A-2a

$R = 573.69'$, $R_1 = 410.28'$, $D = 10°$, $D_1 = 14°$, Turnouts No. 8

P, ft.	L, degrees	Track No. 1		Track No. 2		Total-ft.		Total track ft.
		A-ft.	L-ft.	B-ft.	L-ft.	Track 1	Track 2	
13	10°13′	9.18	72.95	50.49	30.60	82.13	81.09	163.22
14	10°36′	12.79	75.71	52.85	34.46	88.50	87.31	175.81
15	10°58′	16.25	78.37	55.09	38.19	94.62	93.28	187.90
16	11°20′	19.59	80.95	57.24	41.80	100.54	99.04	199.58
17	11°41′	22.82	83.45	59.31	45.30	106.27	104.61	210.88
18	12°01′	25.95	85.88	61.29	48.70	111.83	109.99	221.82
19	12°22′	28.98	88.24	63.21	52.01	117.22	115.22	232.44
20	12°41′	31.93	90.54	65.06	55.23	122.47	120.29	242.76
21	12°59′	34.81	92.79	66.86	58.38	127.60	125.24	252.84
22	13°18′	37.61	94.98	68.59	61.45	132.59	130.04	262.63
23	13°36′	40.34	97.14	70.28	64.45	137.47	134.73	272.20
24	13°53′	43.02	99.23	71.92	67.39	142.25	139.31	281.56
25	14°11′	45.63	101.28	73.51	70.26	146.91	143.77	290.68
26	14°28′	48.20	103.30	75.06	73.09	151.50	148.15	299.65
27	14°44′	50.71	105.28	76.58	75.86	155.99	152.44	308.43
28	15°01′	53.17	107.22	78.05	78.58	160.39	156.63	317.02
29	15°17′	55.60	109.13	79.50	81.25	164.73	160.75	325.48
30	15°32′	57.98	111.01	80.90	83.88	168.99	164.78	333.77
31	15°48′	60.31	112.85	82.28	86.47	173.16	168.75	341.91
32	16°03′	62.62	114.67	83.63	89.01	177.29	172.64	349.93
33	16°18′	64.88	116.46	84.95	91.52	181.34	176.47	357.81
34	16°33′	67.11	118.22	86.24	93.99	185.33	180.23	365.56
35	16°48′	69.31	119.96	87.51	96.42	189.27	183.93	373.20
36	17°02′	71.48	121.67	88.74	98.82	193.15	187.56	380.71
37	17°16′	73.62	123.36	89.97	101.19	196.98	191.16	388.14
38	17°30′	75.73	125.04	91.16	103.52	200.77	194.68	395.45
39	17°44′	77.81	126.69	92.33	105.83	204.50	198.16	402.66
40	17°58′	79.87	128.31	93.48	108.11	208.18	201.59	409.77
45	19°04′	89.80	136.16	98.95	119.10	225.96	218.05	444.01
50	20°06′	99.22	143.61	103.98	129.52	242.83	233.50	476.33
55	21°06′	108.19	150.69	108.65	139.44	258.88	248.09	506.97
60	22°03′	116.79	157.48	112.99	148.94	274.27	261.93	536.20
65	22°58′	125.07	163.99	117.04	158.06	289.06	275.10	564.16
70	23°50′	133.07	170.27	120.84	166.85	303.34	287.69	591.03
75	24°41′	140.81	176.34	124.40	175.35	317.15	299.75	616.90
80	25°31′	148.33	182.22	127.74	183.58	330.55	311.32	641.87

U. S. Army Corps of Engineers

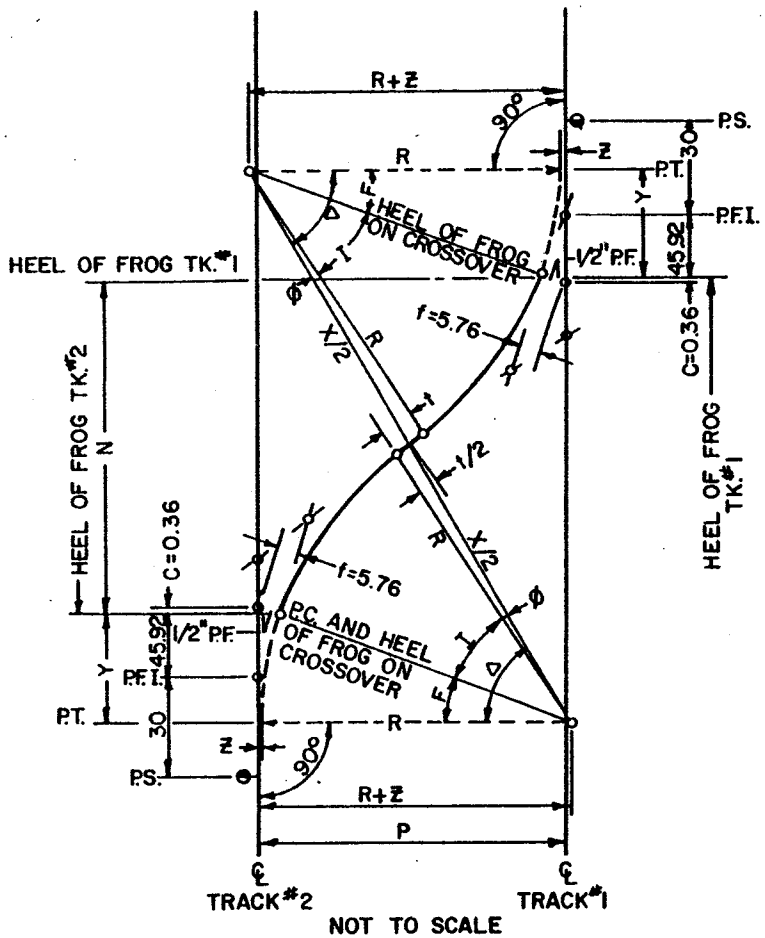

FORMULA AND PROCEDURE FOR THE DESIGN AND LAYOUT FOR A CROSSOVER BETWEEN PARALLEL TRACKS WHEN A PREDETERMINED LENGTH OF TANGENT (t) BETWEEN CURVES IS ADOPTED AND (P) IS GREATER THAN 16 FEET IN THE FIGURE AND FORMULA, KNOWN DIMENSIONS AND CHARACTERISTICS PERTAINING TO NO. 8 FROG ARE USED.

KNOWN FACTORS ARE:

F = FROG ANGLE 7° 09' 10" FOR NO. 8

R = RADIUS OF CURVES

P = DISTANCE BETWEEN TRACKS

C = 0.36 = $\frac{45.92}{\cos F}$ -45.92 FOR NO. 8

f = 5.76 FOR NO. 8 FROG, 8'-3" THEORETICAL HEEL DIST.

t = LENGTH OF TANGENT BETWEEN CURVES.

Z = [(R+f) COS F] - R

Z = 0.00 FOR 7° -50' CURVE

= 1.2526 FOR 10° CURVE

= 1.9947 FOR 12° CURVE

= 2.5244 FOR 14° CURVE

SIN 7° 09' 10" = .1245155

COS 7° 09' 10" = .99221766

TAN 7° 09' 10" = .12549213

REQUIRED:

I = INTERSECTION ANGLES

N = DISTANCE BETWEEN HEELS OF FROGS

$\tan \phi = \frac{t/2}{R}$

$X = \frac{2R}{\cos \phi}$

$\cos \Delta = \frac{2(R+Z)-P}{X}$

$I = \Delta - (F+\phi)$

$Y = [(R+f) \sin F] - C$

$N = X \sin \Delta - 2Y$

FIGURE A-3 CROSSOVER BETWEEN PARALLEL TRACKS

U. S. Army Corps of Engineers

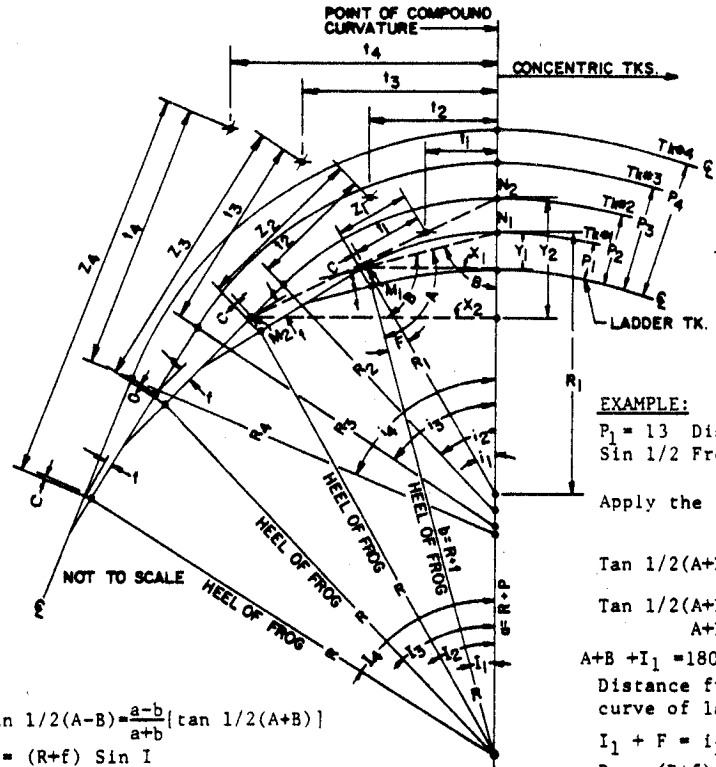

Formula for designing and laying out a series of concentric yard tracks from a curved ladder track.

Table A-7 was developed based on curved ladders in which the distance between frogs subtends one frog angle. The table is also based on the use of No. 8 frogs having a theoretical heel distance of 8'-3".

$\text{Tan } 1/2(A-B) = \frac{a-b}{a+b}[\tan 1/2(A+B)]$

$X = (R+f) \text{ Sin } I$

$Y_1 = (R+P_1)-[(R+f) \text{ Cos } I_1]$

$Z = \frac{Y_1}{\text{Sin} i_1} + C$

t_1 = tangent distance for yard tracks $= X_1 - \frac{Y_1}{\tan 1/2\ i_1}$

R_1 = Radius of curve for yard tracks No. 1 $= \frac{t_1}{\tan 1/2\ i_1}$

GIVEN:

Distance between frogs

F = Frog Angle = 7°09'10"

Sine	7°09'10"	=.124515
Cos	7°09'10"	=.992217
Tan	7°09'10"	=.12549
Sine	3°34'35"	=.062379
Tan	3°34'35"	=.06250

R = Radius of equivalent curve of ladder track

$P_{1,2,3}$ = Distances from centerline of ladder to consecutive yard tracks

f = Distance between centers of ladder and yard tracks measured at right angles to the ladder track at the heel of frog. f = 5.7621 for No. 8 frog.

C = Distance between the heel of frog, along the centerline of a yard track, and a point where yard track centerline is intersected by a radial line through the heel of frog of the ladder track. C = 0.36014 for No. 8 frog having a theoretical heel distance of 8'-3".

REQUIRED:

Values of I,i,t,R and tangent back of heel of frog for all yard tracks.

Solution for track No. 1

Let a = R+P, b = R+f, A-B = F

EXAMPLE:

P_1 = 13 Distance between frogs = 100 feet No. 8 frog

Sin 1/2 Frog Angle = $\frac{50}{R}$ $R = \frac{50}{\text{Sin } 3°34'35"} = 801.55$

Apply the tangent formula: $\frac{a-b}{a+b} = \frac{\text{Tan } 1/2(A-B)}{\text{Tan } 1/2(A+B)}$

$\text{Tan } 1/2(A+B) = (.0625)\ \frac{(801.55+13) + (801.55+5.7)}{(801.55+13) - (801.55+5.7)}$

$\text{Tan } 1/2(A+B) = 14.01$

$A+B = 171°50'$

$A+B + I_1 = 180°$ $I_1 = 180°-(A+B) = 180°-(171°50') = 8°10'$

Distance from heel of frog to P.C.C. along equivalent curve of ladder track = L_1 = 114.25

$I_1 + F = i_1 = 15°19'10"$

$R_1 = \frac{(R+f) \text{ Sin } I_1}{\text{Sin } i_1} = \frac{(810.55+5.7621)(.14205)}{.26419} = 434.07$

$R_1 = \frac{t_1}{\text{Tan } 1/2}$

$t_1 = R_1 \text{ (Tan } i_1/2) = (434.07)(\text{Tan } 7°39'35") = 58.37$

$X_1 = (R+f)(\text{Sin } I_1) = (801.55+5.7621)(.142053) = 114.68$

$Y_1 = (R+P)-[(R+f)(\text{Cos } I_1)]$

$= (801.55+13)-[(801.55+5.76)(\text{Cos } 8°10')]$

$= (814.55)-[(807.312)(.989859)] = 15.42$

$Z = \frac{Y_1}{\text{Sin} i_1} + C = \frac{15.42}{\text{Sin } 15°19'10"} + .36014 = 58.72$

U. S. Army Corps of Engineers

FIGURE A-4. LAYOUTS FOR YARD TRACKS

Table A-7. Railroad Yard Ladders Parallel to Tracks on Curves - Reference Figure A-4

Frog spacing ft.	Yard ladder				Yard track No. 1				Tan. back of heel	Yard track No. 2				Tan. back of heel
	Curvature	Heel of frog to P. C. C.			I_1	L_1	R_1-ft.	t_1-ft.		I_2	L_2	R_2-ft.	t_2-ft.	
		I	R-ft.	Dist-ft.										
79	9° 8′	10°18′	633.49	113.69	10°18′	17°27′	381.00	58.46	0.36	17°27′	24°36′	381.68	83.22	36.40
80	8°56′	10°10′	641.49	113.72	10°10′	17°19′	383.78	58.45	.36	17°19′	24°28′	386.16	83.75	36.30
81	8°50′	10° 3′	649.50	113.75	10° 3′	17°12′	386.54	58.45	.36	17°12′	24°21′	390.66	84.29	36.20
82	8°43′	9°55′	657.50	113.78	9°55′	17° 5′	389.27	58.44	.36	17° 5′	24°14′	395.18	84.83	36.10
83	8°37′	9°48′	665.50	113.81	9°48′	16°58′	391.98	58.44	.36	16°58′	24°07′	399.71	85.37	35.99
84	8°31′	9°42′	673.50	113.84	9°42′	16°51′	394.66	58.44	.36	16°51′	24° 0′	404.26	85.93	35.86
85	8°25′	9°35′	681.51	113.86	9°35′	16°44′	397.29	58.43	.36	16°44′	23°53′	408.78	86.47	35.74
86	8°19′	9°28′	689.51	113.89	9°28′	16°38′	399.92	58.43	.36	16°38′	23°47′	413.34	87.02	35.62
87	8°13′	9°22′	697.51	113.91	9°22′	16°31′	402.52	58.43	.36	16°31′	23°40′	417.92	87.58	35.48
88	8° 8′	9°16′	705.51	113.94	9°16′	16°26′	405.09	58.42	.36	16°25′	23°34′	422.40	88.13	35.35
89	8° 2′	9°10′	713.52	113.96	9°10′	16°19′	407.64	58.42	.36	16°19′	23°28′	427.09	88.70	35.20
90	7°57′	9° 4′	721.52	113.99	9° 4′	16°13′	410.16	58.42	.36	16°13′	23°22′	431.76	89.26	35.05
91	7°52′	8°58′	729.52	114.00	8°58′	16° 7′	412.64	58.41	.36	16° 7′	23°16′	436.29	89.82	34.90
92	7°46′	8°52′	737.53	114.03	8°52′	16° 1′	415.13	58.41	.36	16° 1′	23°10′	440.93	90.39	34.75
93	7°41′	8°46′	745.53	114.06	8°46′	15°55′	417.59	58.41	.36	15°56′	23° 5′	445.56	90.97	34.58
94	7°37′	8°41′	753.53	114.08	8°41′	15°50′	420.01	58.41	.36	15°50′	22°59′	450.23	91.54	34.42
95	7°32′	8°35′	761.53	114.10	8°35′	15°44′	422.41	58.40	.36	15°45′	22°54′	454.88	92.12	34.24
96	7°27′	8°30′	769.54	114.12	8°30′	15°39′	424.80	58.40	.36	15°39′	22°48′	459.55	92.70	34.06
97	7°22′	8°25′	777.54	114.14	8°25′	15°34′	427.16	58.40	.36	15°34′	22°43′	464.24	93.28	33.89
98	7°18′	8°20′	785.54	114.16	8°20′	15°29′	429.50	58.39	.36	15°29′	22°38′	468.93	93.86	33.71
99	7°14′	8°15′	793.54	114.18	8°15′	15°24′	431.81	58.39	.36	15°24′	22°33′	473.63	94.45	33.51
100	7° 9′	8°10′	801.55	114.20	8°10′	15°19′	434.11	58.39	.36	15°19′	22°28′	478.34	95.04	33.32
101	7° 5′	8° 5′	809.55	114.22	8° 5′	15°14′	436.39	58.39	.36	15°15′	22°24′	483.07	95.63	33.13
102	7° 1′	8° 1′	817.55	114.24	8° 1′	15°10′	438.63	58.38	.36	15°10′	22°19′	487.79	96.21	32.94
103	6°57′	7°56′	825.55	114.26	7°56′	15° 5′	440.87	58.38	.36	15° 5′	22°14′	492.55	96.81	32.73
104	6°53′	7°52′	833.56	114.28	7°52′	15° 1′	443.07	58.38	.36	15° 1′	22°10′	497.29	97.40	32.53

Table A-7 (Continued). Railroad Yard Ladders Parallel to Tracks on Curves - Reference Figure A-4

Frog spacing ft.	Yard Track No. 3				Tan. back of heel	Yard Track No. 4				Tan. back of heel
	I_3	I_4	R_3-ft.	t_3-ft.		I_4	I_4	R_4-ft.	t_4-ft.	
79	24°36′	31°45′	417.11	118.63	55.11	31°45′	38°54′	454.60	160.56	65.76
80	24°28′	31°37′	422.76	119.73	54.91	31°38′	38°47′	460.87	162.20	65.46
81	24°21′	31°30′	428.38	120.83	54.69	31°30′	38°39′	467.17	163.85	65.14
82	24°14′	31 23′	434.01	121.93	54.46	31°23′	38°32′	473.48	165.51	64.81
83	24° 7′	31°16′	439.67	123.03	54.23	31°16′	38°25′	479.82	167.18	64.48
84	24° 0′	31° 9′	445.35	124.14	53.99	31° 9′	38°18′	486.16	168.85	64.13
85	23°53′	31° 2′	451.02	125.25	53.73	31° 2′	38°12′	492.51	170.51	63.79
86	23°47′	30°56′	456.73	126.37	53.48	30°56′	38° 5′	498.90	172.19	63.43
87	23°40′	30°49′	462.46	127.49	53.21	30°49′	37°58′	505.29	173.87	63.07
88	23°34′	30°43′	468.20	128.61	52.95	30°43′	37°52′	511.70	175.55	62.71
89	23°28′	30°37′	473.95	129.73	52.68	30°37′	37°46′	518.12	177.24	62.33
90	23°22′	30°31′	479.73	130.86	52.39	30°31′	37°40′	524.56	178.94	61.94
91	23°16′	30°25′	485.49	131.99	52.11	30°25′	37°34′	531.00	180.62	61.56
92	23°10′	30°19′	491.30	133.13	51.82	30°20′	37°29′	537.48	182.33	61.16
93	23° 5′	30°14′	497.13	134.28	51.51	30°14′	37°23′	543.98	184.04	60.75
94	22°59′	30° 8′	502.96	135.42	51.21	30° 8′	37°17′	550.46	185.74	60.36
95	22°54′	30° 3′	508.80	136.57	50.90	30° 3′	37°12′	556.96	187.45	59.95
96	22°49′	29°58′	514.66	137.72	50.58	29°58′	37° 7′	563.48	189.16	59.53
97	22°43′	29°52′	520.54	138.87	50.27	29°53′	37° 2′	570.02	190.88	59.11
98	22°38′	29°47′	526.43	140.03	49.94	29°48′	36°57′	576.56	192.60	58.68
99	22°33′	29°42′	532.33	141.18	49.61	29°43′	36°52′	583.12	194.32	58.25
100	22°28′	29°37′	538.25	142.34	49.27	29°38′	36°47′	589.69	196.05	57.81
101	22°24′	29°33′	544.18	143.51	48.94	29°33′	36°42′	596.28	197.78	57.37
102	22°19′	29°28′	550.12	144.67	48.60	29°28′	36°37′	602.87	199.51	56.92
103	22°14′	29°23′	556.08	145.84	48.25	29°24′	36°33′	609.48	201.25	56.47
104	22°10′	29°19′	562.04	147.02	47.89	29°19′	36°28′	616.09	202.98	56.02

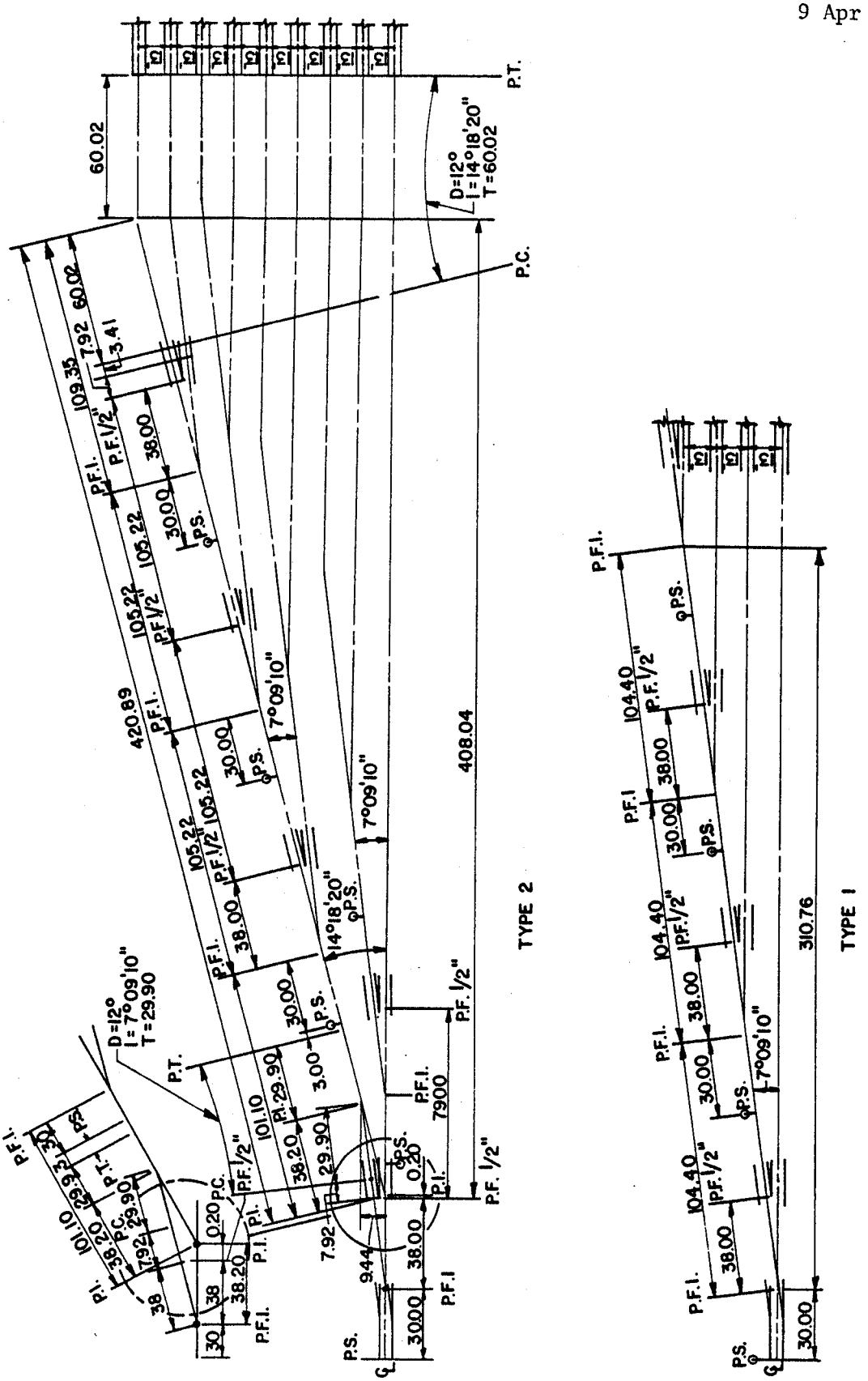

U. S. Army Corps of Engineers

FIGURE A-5. RAILROAD YARD LADDERS

Table A-8. Material Required for 1,000 Feet of Track

Material	Rail Section (39-Foot) 90 ARA-A	115 RE
Rail weight, long tons	26.78	28.97
Joint bars		
No. of pairs	51.28	51.28
Weight, net tons	1.64	1.91
Ties		
No. per rail - 20	512	512
No. per rail - 21	538	538
No. per rail - 22	564	564
No. per rail - 23	589	589
No. per rail - 24	615	615
Tie Plates, net tons		
No. of ties - 512	5.78	6.86
No. of ties - 538	6.07	7.20
No. of ties - 564	6.36	7.55
No. of ties - 589	6.64	7.89
No. of ties - 615	6.94	8.23
Spikes (4 per tie) 200-pound kegs		
No. of ties - 512	8.4	8.4
No. of ties - 538	8.9	8.9
No. of ties - 564	9.3	9.3
No. of ties - 589	9.7	9.7
No. of ties - 615	10.1	10.1
Track bolts, 200-pound kegs		
Size - 1 × 5-1/2, inches	2.3	--
Size - 1 × 6, inches	--	2.4
Spring washers, pounds (approximately)	37.0	37.0
Ballast (8 inches under tie), cubic yards		
Single track	490	490
Double track	940	940

NOTES: No allowance is made in joint bars, bolts, and washers for short rail.

Spike quantities are based on 6- by 5.8-inches spikes. On curves increase quantities 50 percent

Bolts and nuts are generally shipped in same container.

Ballast is for tangent track with 15 percent allowance for shrinkage.