CECW-CE

DEPARTMENT OF THE ARMY
U.S. Army Corps of Engineers
Washington, DC 20314-1000

EM 1110-2-2610
Change 1

Manual
No. 1110-2-2610

2 April 2004

Engineering and Design
LOCK AND DAM GATE OPERATING AND CONTROL SYSTEMS

1. This change to EM 1110-2-2610, 12 December 2003, adds a new paragraph, 4.7 Onsite Wireless Remote to Chapter 4.

2. Substitute and add the attached pages.

Remove Page	Insert Page
i	i
ii	ii
4-1	4-1
4-72	4-72 through 4-74

3. File this change sheet in front of the publication for reference purposes.

FOR THE COMMANDER:

MICHAEL J. WALSH
Colonel, Corps of Engineers
Chief of Staff

DEPARTMENT OF THE ARMY
U.S. Army Corps of Engineers
Washington, DC 20314-1000

EM 1110-2-2610
Change 2

CECW-CE

Manual
No. 1110-2-2610

18 November 2008

Engineering and Design
LOCK AND DAM GATE OPERATING AND CONTROL SYSTEMS

1. This is change 2 to EM 1110-2-2610, 12 December 2003; it eliminates the option to use ceramic coated piston rods for civil works lock and dam gate operating equipment. Recent coating failures indicate that current ceramic coating technology cannot withstand the harsh environment of civil works lock and dam projects.

2. Substitute the attached pages:

Remove page (s)	Add page (s)
2-41, 5-11, 5-24, and 5-29	2-41, 5-11, 5-24, and 5-29

3. File this change in front of the publication for reference purposes.

FOR THE COMMANDER:

S.L. Hill
STEPHEN L. HILL
Colonel, Corps of Engineers
Chief of Staff

DEPARTMENT OF THE ARMY
U.S. Army Corps of Engineers
Washington, DC 20314-1000

EM 1110-2-2610

CECW-ET

Manual
No. 1110-2-2610

12 December 2003

Engineering and Design
LOCK AND DAM GATE OPERATING AND CONTROL SYSTEMS

1. Purpose. This manual establishes criteria and presents guidance for the mechanical and electrical design of navigation lock and spillway gate operating systems for both new construction and the rehabilitation of existing projects.

2. Applicability. This manual applies to all USACE commands having civil works responsibilities.

3. Distribution Statement. This manual is approved for public release; distribution is unlimited.

4. Discussion. Properly designed lock and dam gate operating and control equipment are critical to the successful operation and maintenance of Corps facilities. Efficiency and reliability of the operation of navigation locks and dams and the continued safe operation of Corps projects depend on how well the gate operating equipment is designed, manufactured, operated and maintained.

FOR THE COMMANDER:

3 Appendices
(See Table of Contents)

MICHAEL J. WALSH
Colonel, Corps of Engineers
Chief of Staff

DEPARTMENT OF THE ARMY
U.S. Army Corps of Engineers
Washington, DC 20314-1000

CECW-EC

Manual
No. 1110-2-2610

2 April 2004

Engineering and Design
LOCK AND DAM GATE OPERATING AND CONTROL SYSTEMS

Table of Contents

Subject	Paragraph	Page
Chapter 1		
Introduction		
Purpose	1-1	1-2
Applicability	1-2	1-2
References	1-3	1-2
Distribution	1-4	1-2
Plates	1-5	1-2
General	1-6	1-2
Mandatory Requirements	1-7	1-3
Chapter 2		
Lock Operating Equipment		
Miter Gate	2-1	2-2
Sector Gate	2-2	2-24
Vertical Lift Gate (Locks)	2-3	2-28
Culvert Tainter Valve	2-4	2-36
Chapter 3		
Spillway Operating Equipment		
Tainter Gate	3-1	3-2
Vertical Lift Gate (Spillways)	3-2	3-16
Wicket Gate	3-3	3-19
Hinged Crest Gate	3-4	3-23
Submergible Tainter Gate	3-5	3-27

Chapter 4
Control

Introduction 4-1 4-2
Design Considerations 4-2 4-2
Main Control Equip & Instrumentation.....4-3 4-16
Safety & Security.....4-4 4-59
Procurement Considerations 4-5 4-60
Power Supply.....4-6 4-68
Onsite Wireless Control 4-72 4-74

Chapter 5
System and Component

General Design Criteria 5-1 5-3
Hydraulic Fluid Power.....5-2 5-9
Lubrication.....5-3 5-25
Fire Protection.....5-4 5-25
Ice and Debris Control.....5-5 5-25
Safety 5-6 5-28
Corrosion Protection.....5-7 5-29

Chapter 6
Installation, O&M and Inspection

Installation 6-1 6-2
Operation and Maintenance.....6-2 6-4
Inspection and Testing.....6-3 6-5
Access for Inspection and Maintenance Activities.....6-4 6-8

Appendix A References

Appendix B Illustrative Plates

Appendix C Sample Computations

Glossary

CHAPTER 1
Introduction

1.1 Purpose and Scope

1.2 Applicability

1.3 References

1.4 Distribution

1.5 Plates

1.6 General
- 1.6.1 Type of gate operating equipment
- 1.6.2 Control Systems
- 1.6.3 Relationship to other manuals
- 1.6.4 Coordination.

1.7 Mandatory Requirements

CHAPTER 1
Introduction

1.1 Purpose. This manual provides guidance for the mechanical and electrical design of navigation lock and spillway gate operating and control systems for both new construction and the rehabilitation of existing projects. Operation, maintenance and inspection information as it relates to equipment design and layout, is also provided.

1.2 Applicability. This manual applies to all HQUSACE elements, major subordinate commands, districts, laboratories, and field operating activities having responsibilities for the design and construction of civil works projects.

1.3 References. References are provided in Appendix A; terms and definitions are provided in the Glossary.

1.4 Distribution. This publication is approved for public release; distribution is unlimited.

1.5 Plates. Illustrative plates containing general layout information, typical details, design data are included in Appendix B. Sample computations are provided in Appendix C.

1.6 General. The lock gate operating equipment information presented in this document is a revision of the information previously presented in the 30 June 1994 version of EM 1110-2-2703. Additionally, this manual provides engineering and design information about computer control systems for locks and different types of gate operating equipment for spillways. The information presented herein is, for the most part, based on many years of actual experience of similar equipment and systems currently in use. The only exceptions are the information presented for the hydraulic cylinder operated wicket gate and the hinged crest gate. The wicket gate information is based on a full-scale test facility built to test different materials and operating arrangements, see report titled "Results of the Olmsted Hydraulic Operated Wicket Dam" for additional information. Information about the hinged crest gate came from Montgomery Point Lock and Dam, a recently (with respect to the publication date of this document) constructed project.

1.6.1 Types of gate operating equipment.

1.6.1.1 Miter Gate Operating Equipment. Four types of miter gate operating equipment for lock application are presented; Panama Canal linkage, Modified Ohio linkage, Ohio linkage and direct
connected linkage (hydraulic cylinder actuated). Although a discussion of all four types is presented, this manual recommends the Ohio and direct connected linkages. Miter gate description and design information is presented in EM 1110-2-2703.

1.6.1.2 Sector Gate Operating Equipment. A general discussion and design criteria for three types of sector gate operating equipment for lock application are presented. They are wire rope and drum, rack and pinion and direct acting hydraulic cylinder. Sector gate description and design information is presented in EM 1110-2-2703.

1.6.1.3 Tainter Gate Operating Equipment. Tainter gate operating equipment presented includes direct connected hydraulic cylinder, wire rope and electric motor driven gear sets for typical and submergible gate types, round link chain with pocket wheel or grooved drum, and Engineering Steel Chain. Tainter gate description and design information is presented in EM 1110-2-2702.

1.6.1.4 Vertical Lift Gate Operating Equipment. The operating machinery description and design requirements for vertical lift gates is provided for both lock and spillway gates. The type of equipment includes wire rope and electric motor driven gear sets, direct connected hydraulic cylinder, and a screw stem hoist operated by an electric motor driven, torque limiting gear set. Vertical lift gate description and design information is presented in EM 1110-2-2701.

1.6.2 Control systems. Chapter 4 presents detailed information on PLC based control systems. This information provides the means to develop control systems for new projects and for the replacement and upgrading of existing systems. It is written for lock application but much of the same technology and design information can be adapted to other Corps civil works projects.

1.6.3 Relationship to Other Manuals. If information presented in this manual conflict with other engineering manuals, this manual takes precedence.

1.6.4 Coordination. Design of gate operating and control equipment for locks and spillways is a team effort. The planning, design, selection and layout should be coordinated among all the disciplines involved. This includes but is not limited to architectural, structural, H&H, mechanical and electrical. In addition to the design features that are normally coordinated, e.g., equipment anchoring, gate opening and closing rate, etc, life safety issues such as fire protection, access, egress, fire detection and alarm, and security should be included in the design process. The design team should also include operations and construction personnel, and contracting specialists if a supply contract will be the procurement method.

1.7 Mandatory Requirements. This manual provides guidance for the protection of U.S. Army Corps of Engineers (USACE) structures. In certain cases guidance requirements, because of its criticality to project safety and performance, are considered to be mandatory as discussed in ER 1110-2-1150. Those cases will be identified as “mandatory”.

CHAPTER 2
Lock Operating Equipment

2.1 Miter Gate
- 2.1.1 Description of Linkages and Applications
- 2.1.2 Design Criteria
- 2.1.3 Load Analysis
- 2.1.4 Determination of Machinery Loads
- 2.1.5 Operating Machinery Control
- 2.1.6 Miscellaneous Equipment and Systems
- 2.1.7 Pintle Assembly

2.2 Sector Gate
- 2.2.1 General Description
- 2.2.2 Design Considerations and Criteria
- 2.2.3 Operating Procedure/Controls
- 2.2.4 Special Design Consideration

2.3 Vertical Lift Gate (Locks)
- 2.3.1 General Description and Application
- 2.3.2 Design Criteria
- 2.3.3 Controls
- 2.3.4 Special Design Considerations

2.4 Culvert Tainter Valve
- 2.4.1 General Description and Application
- 2.4.2 Design Criteria
- 2.4.3 Controls
- 2.4.4 Special Design Considerations
- 2.4.5 Other Options

CHAPTER 2
Lock Operating Equipment

2.1 Miter Gate.

2.1.1 Description of Linkages and Applications. Four different types of miter gate operating machines have been frequently used. The Panama Canal Linkage, which has no angularity between the strut and sector arms at either the open or closed positions of the gate, is shown in Figure 2-1. The Ohio River Linkage, having angularity between the strut and sector arms at both the open and closed positions, is shown in Figure 2-2. The Modified Ohio River Linkage has angularity between the strut and sector arms at the open position and no angularity at the closed position. This linkage is shown in Figure 2-3. The direct connected linkage, which does not use strut arms or sector arms, transmits hydraulic cylinder force (thrust) directly to the gate. This linkage is shown in Figure 2-4.

2.1.1.1 Panama Canal Linkage. The Panama Canal Linkage has been used primarily where electric motor operation was feasible, that is, at locations where high water will not overtop the lockwall. The operating machinery for this linkage generally consists of a high torque, high slip A.C. motor driving the gate through two enclosed speed reducers, bull gear, sector arm and spring type strut. This linkage will permit the gate to be uniformly accelerated from rest to the mid point of its travel and then uniformly decelerated through the remainder of its travel, thus eliminating the need for elaborate motor speed control. This is accomplished by locating the operating arm and strut on "dead center" when the gate leaf is in both the open and closed positions. The strut must be located at a higher elevation than the sector arm in order to pass over the arm and become aligned for "dead center" position when the gate is fully open. Special consideration should be given to the design of this eccentric connection between the strut and sector arm. An assembly layout of the Panama type linkage is shown on Plate B-1.

2.1.1.2 Ohio River Linkage. The Ohio River Linkage consists of either a hydraulic cylinder and rack gear, or an electric motor and gear reducer, driving a sector gear/sector arm assembly. A strut arm, which usually includes a buffer spring, connects the gate leaf and sector arm. A typical machine is shown on Plate B-3.

2.1.1.3 Modified Ohio River Linkage. The Modified Ohio River Linkage is similar to the Panama type except that the "dead center" alignment is attained only when the gate is in the mitered (fully closed) position. With the Modified Ohio Linkage, the strut and sector gear are located at the same elevation, thus eliminating the eccentric strut connection but preventing the linkage from attaining the

"dead center" position with the gate recessed. The operating machinery for this linkage has been built either for electric motor drive as with the Panama Canal machine or hydraulically operated as with the Ohio River machine. An assembly layout of the Modified Ohio River Linkage with electric motor drive is shown on Plate B-2. Special consideration should be given to the strut length and cylinder stroke which become critical at the gate closed position. Generally, some means of adjusting strut length should be provided in order to ensure that the gate's leaves are fully mitered when the sector and strut arms go straight. If the gates do not miter completely at the straight position, any additional travel provided by the cylinder or motor will only pull the gates further apart.

2.1.1.4 Direct Connected Linkage. The Direct Connected Linkage consists of a hydraulic cylinder with its shell (or body) supported in the miter gate machinery recess by a trunnion/cardan ring assembly (or gimbal) and its rod connected directly to the miter gate with a spherical bearing type clevis. Its linkage kinematics is such that it is necessary to control the acceleration of the gate by use of a variable volume pumping unit instead of relying on the mechanical advantage of the linkage. The size of the piston rod is determined by the bending/buckling load criteria. Since the piston rod is used as the strut, it is generally a little larger in diameter than the rod of the Ohio River type machine. This larger rod also increases the ratio of time of opening to time of closing, since the net effective cylinder volume on the rod end is smaller relative to the volume of the cap end. This variation in opening and closing times can be easily eliminated by using adjustable flow control valves or a regenerative circuit in the hydraulic system. Experience has shown that the direct connected machine costs approximately 30 percent less than the conventional Ohio River type machine. A direct connected machine is shown on Plate B-4. See Chapter 5 for a discussion on hydraulic system design.

2.1.1.5 Recommended Linkage. The Ohio River or Direct Connected linkages are probably the most satisfactory types to use with hydraulic cylinder operation. Load analysis for all components is possible for both linkages. Overloads due to surges or obstructions are carried through the piston and converted to oil pressure which is released through a relief valve. In this way, all machinery component loads can be determined based on the relief valve setting. This is also true for the Modified Ohio linkage except at the mitered position. As this linkage approaches the mitered position, the sector arm and strut approach the "dead center" position. Should an obstruction be encountered at this time, the force in the strut becomes indeterminate. Although this linkage provides restraint against conditions of reverse head in the "dead center" position, it must be designed with an easily repaired "weak link" to limit the maximum loads that can be placed on the machinery components. The Modified Ohio River Linkages on some locks has yielded unsatisfactory results, and these have been converted to Ohio River Linkages. The Ohio River Linkage offers several obvious advantages due to its unique geometric configuration

relating to the acceleration and deceleration of the miter gates. The disadvantages of this system are wear, bearing forces, and mechanical inefficiencies associated with the geared rack, sector gear, sector arm and strut. Ohio River linkages have recorded a service life of more than 50 years on many locks, with good reliability and a minimum of maintenance. But as compared to the direct connected, the Ohio River linkage requires increased greasing and adjustment. The direct connected cylinder arrangement, when properly designed, is the simplest to maintain, repair and replace. The Direct Connected Linkage is very common in Europe and is becoming more common in the U.S., where it is now being used on several 17.1 meter (56 feet) wide, 25.6 meter (84 feet), and 33.5 meter (110 feet) wide locks.

2.1.1.6 Operating Struts. Two types of struts have been used for the above machines. One type utilizes several nests of helical coil springs installed into a cartridge and attached to a wide flange structural steel fabricated member. The springs, when compressed, act as a shock absorber to soften the loads transmitted to the operating machinery. In the case of electric motor operated machines, the compression in the springs permits the operation of a limit switch to cut off current to the motor when the gates are mitered or recessed. The switch also serves as a limit switch to protect the machinery against the possibility of extremely high loads which might occur if an obstruction is encountered when the strut approaches dead center in either direction. The limit switch is set to open the motor circuit at a point immediately preceding the maximum spring compression in the strut. This type of strut is shown on Plate B-5. Another type of strut uses a spring cartridge housing and tubular steel strut. Ring springs are used in the spring cartridge to provide the necessary deflection. Excessive maintenance and repair costs have occurred with the use of this type of strut. In addition, ring springs are available only from one manufacturer. Use of the ring spring type strut is not recommended. Recently, Belleville springs have been utilized in struts and appear to function satisfactorily. The Belleville spring strut is shown on Plates B-6 and B-7. But there have also been several failures reported for the Belleville spring design. This design should consider the extreme loading conditions and necessity for proper lubrication and sealing.

2.1.1.7 Sector Gear Anchorage. The sector gear support and anchorage is one of the more critical items to be considered in the design of miter gate machinery. For proper machine operation and long component life, the sector gear must be maintained in rigid and proper alignment. The recommended arrangement consists of a sector base anchorage, sector base support and a sector base. The sector base anchorage is a welded steel frame imbedded deep in the concrete which provides anchorage and alignment for post tension rods. The sector base support is a heavy, rigid, welded steel member which is anchored to the concrete by the post tension rods. The sector base is a heavy steel casting which is bolted to the sector base support and contains the sector pin on which the sector gear turns. The sector gear pin should be restrained to prevent rotation in the sector base. The design is such that the final post tension rod

force is enough to resist the horizontal sector pin load by friction between the concrete and sector base support. Another important feature is the bearing choice and lubrication design for the bearings that allow the sector gear to rotate around the pin. In addition, compression blocks are welded to the bottom of the sector base support to provide additional resistance to horizontal motion. Details of this anchorage are shown on Plate B-3.

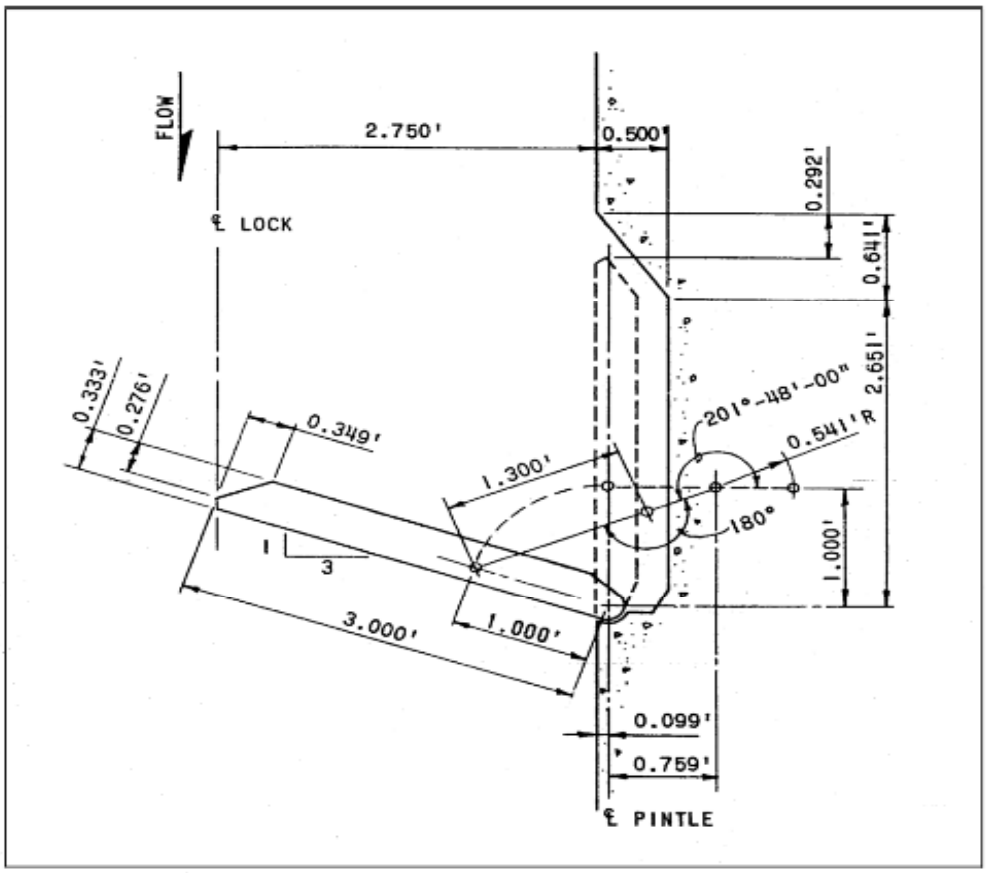

Figure 2-1. Panama Canal Linkage
Note: Dimensions shown are dimensions used in WES model tests

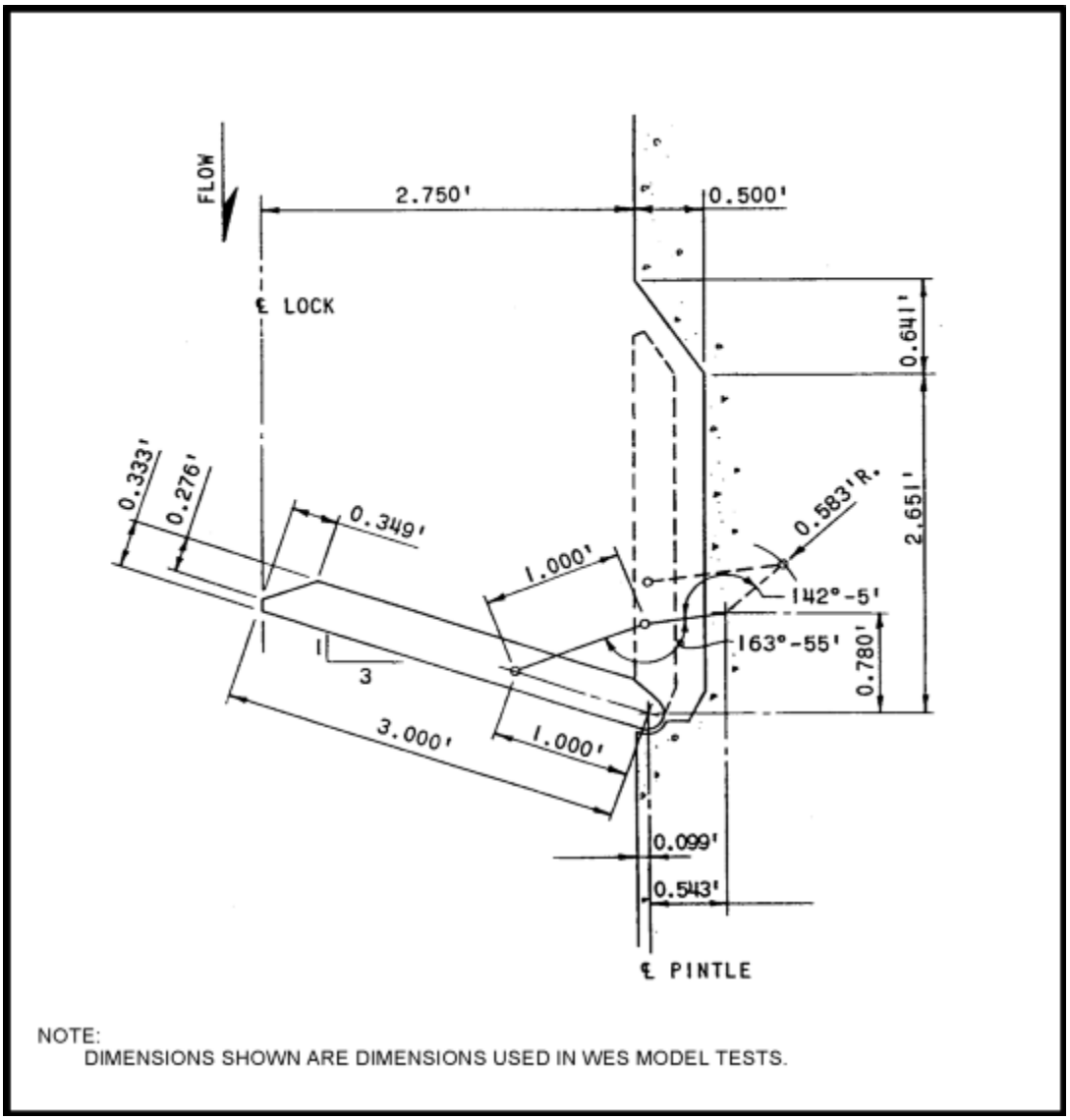

Figure 2-2. Ohio River Linkage

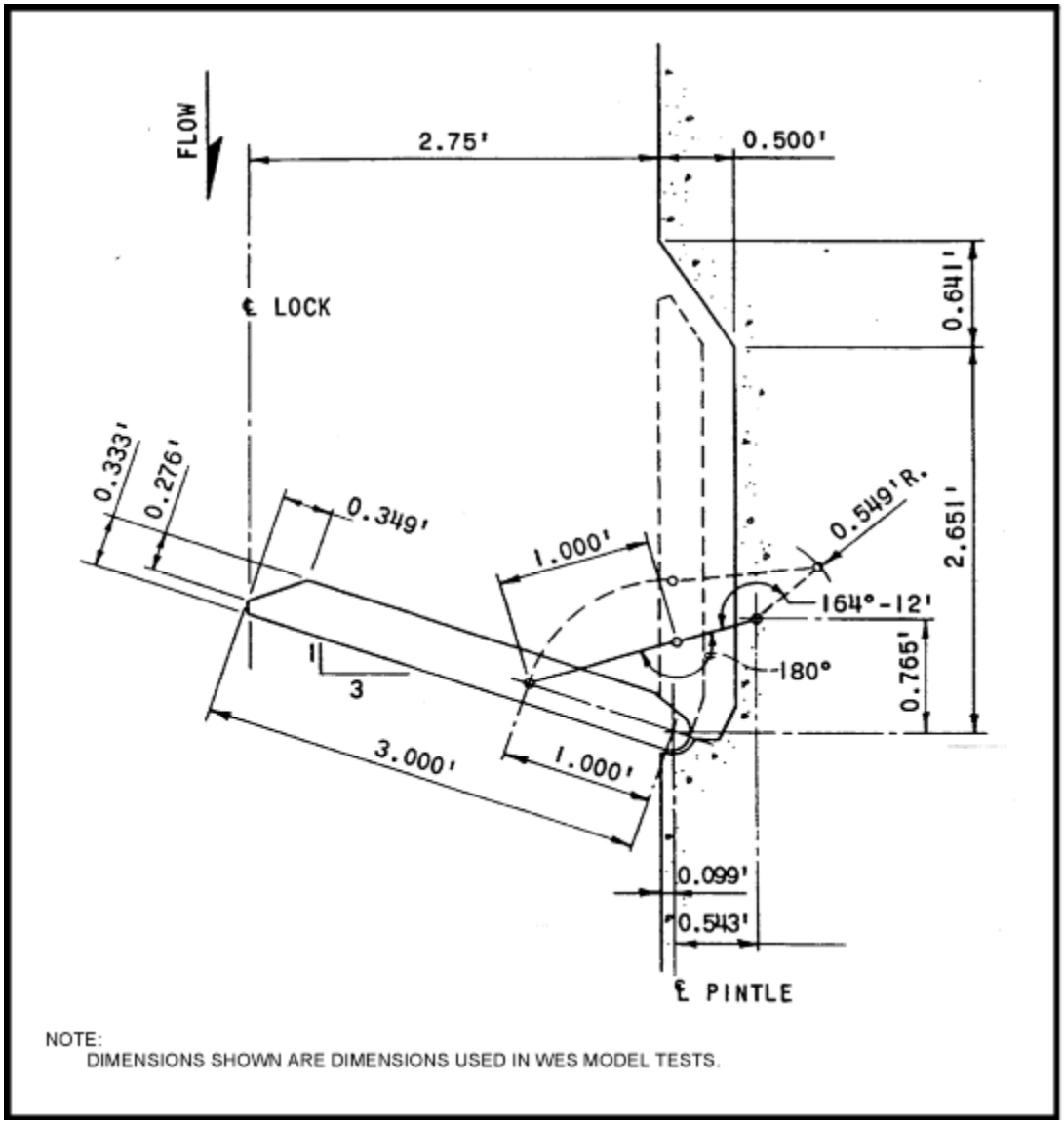

Figure 2-3. Modified Ohio River Linkage

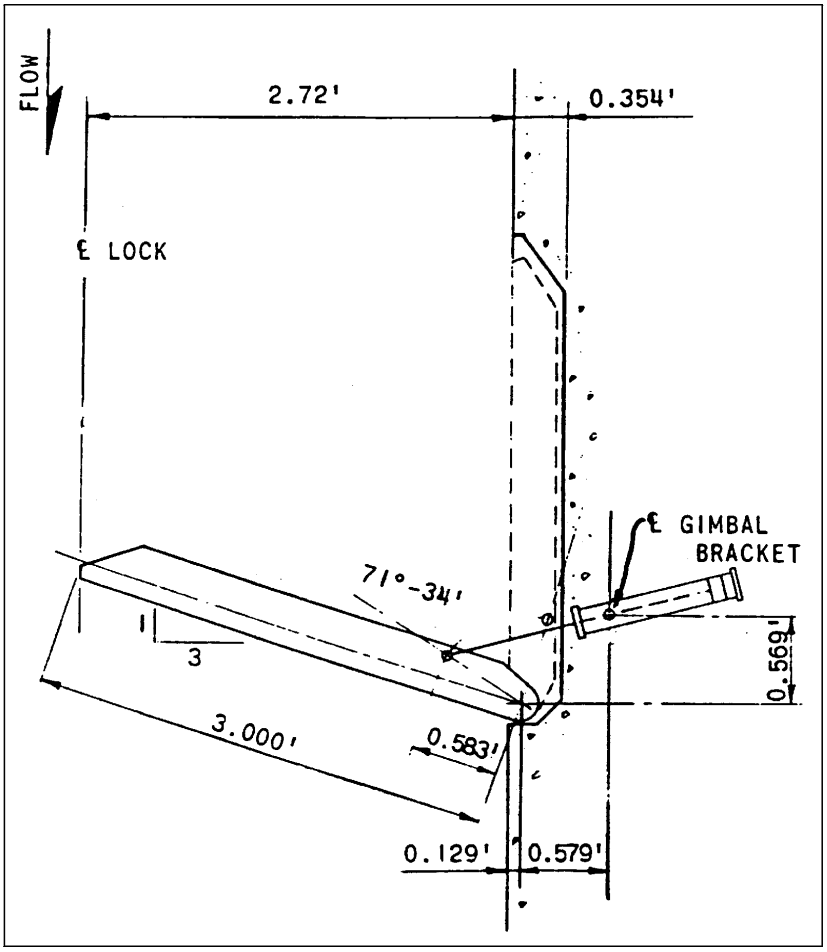

Figure 2-4. Direct Connected Linkage

2.1.2 Design Criteria.

2.1.2.1 Normal Loads. Gate operating machinery should normally be designed to conform to the following criteria: Operating loads on the miter gate machinery should be derived by hydraulic similarity from test data obtained from model studies. The model study available for design is included in U.S. Army Corps of Engineers Waterways Experiment Station (W.E.S.) Technical Report No. 2-651 "Operating Forces on Miter Type Lock Gates", June 1964, Vicksburg, Mississippi. (This was the last study made by W.E.S. on this subject.) This report includes data on the Ohio River, Modified Ohio River, and Panama Canal type linkage. The study contains necessary data for conversion to prototype torque for all three of the different types of linkages. For direct connected type machines, prototype tests were made at Claiborne

Locks and results of the tests are included herein for the determination of gate torque for any proposed direct connected lock machine of similar proportions. A curve of gate torque plotted against percentage of gate closure has been included so that torque at any other submergence or time of operation can be computed by application of Froude's Law, adjusting the submergence and time to suit the new conditions.

2.1.2.2 Temporal Loads. In addition to the above normal loads, the miter gate machinery should be designed to withstand the forces produced by a 0.38 meter (1.25 feet) (exceeding 30 second duration) surge load acting on the submerged portion of the miter gate. For this case, the machinery must be designed to maintain control over the miter gate when the gate is in the miter position. See Plate B-25 for a sample computation. In the recess position, control of the gate may be accomplished by automatically latching the gate in the recess. Normal machinery operating loads govern the machinery design for the intermediate positions.

2.1.2.3 Operating Time. A time of operation should be selected and should be based on the size of gate. For smaller gates, 25.6 meter (84 feet) locks, an average time of 1.5 minutes should be used and for the larger gates, 33.5 meter (110 feet) locks, an average time of 2 minutes would be suitable. Any decision to increase the operating time from 1.5 to 2 minutes for smaller gates, or 2 to 3 minutes for larger gates should be made only after considering the economic impact of the increased time required to transit the lock.

2.1.2.4 Submergence. The design of the gate operating machinery should be based on the submergence of the upper or lower gate, whichever is greater. The design should be the same for all four gate machines since there would be no savings in designing and building two different size machines. The increased design cost, and additional spare parts inventory would offset the reduced cost of the material used in constructing the smaller machine.

2.1.2.4.1 The submergence of the gate is the difference in elevation of the tailwater on the gate and the elevation of the bottom of the lower seal protruding below the gate. A submergence selected for design of the gate machinery should be the tailwater on the gate that would not be exceeded more than 15 to 20 percent of the time.

2.1.2.4.2 The operating cylinder size should be selected to provide a force to operate the gate under these conditions utilizing approximately 6-20 Mpa (900-3000 psi) effective pressure where a central pumping system is used. If higher than 7 Mpa (1000 psi) is selected for the operating pressure, then measures to eliminate hydraulic shock should be considered because of the long hydraulic lines. Where local or integral pumping units are used, an operating pressure of 10-20 Mpa (1500-3000 psi) will be satisfactory.

2.1.2.4.3 The time of gate operation will automatically be lengthened when the required gate torque exceeds the available gate torque. This condition may occur during starting peaks or periods of higher submergence. This condition causes the pressure in the hydraulic cylinder to rise above the relief valve setting, which in turn reduces oil flow to the cylinder slowing down the gate and reducing the required pintle torque. This increases the total time of operation; however, this slower operation will be experienced for only 15 to 20 percent of the lock total yearly operating time.

2.1.2.4.4 Peak torque can be reduced by non-synchronous operation of the gate leaves. A considerable reduction in peak torque can be obtained by having one leaf lead the other by approximately 12.5 percent of the operating time. The time of opening would be increased by the amount of time one gate leads the other. It has been found that in actual practice very few gates are operated in this manner.

2.1.2.5 Under Gate Clearance. Model tests revealed an increase in gate torque values as the bottom clearance decreased, regardless of the length of operating time. When using model similarity to compute gate loads, an adjustment should be made in accordance with model experience. Normally 0.76 to 1.0 meters (2.5 to 3.5 feet) clearance under the gate should be satisfactory.

2.1.2.6 Machine Components. General design criteria applicable to the various machine components is presented in Chapter 5. Allowable stresses may be increased one-third for temporal loading conditions.

2.1.3 Load Analysis.

2.1.3.1 Normal Loads. Normal operating hydraulic loads on miter gates are primarily caused by submergence, speed of gate and clearance under gate. For additional information and explanation the designer should review the W.E.S. Report 2-651.

2.1.3.1.1 For the Ohio River Linkage, W.E.S. Report 2-651 indicates that the maximum torque recorded as the gate leaves entered the mitered position (closing) varies as the 1.5 power of the submergence; and the maximum torque recorded as the gate leaves left the mitered position (opening) varies as the 2.1 power of the submergence.

2.1.3.1.2 For the Modified Ohio River Linkage, W.E.S. Report 2-651 indicates that the maximum torque recorded as the gate leaves entered the mitered position (closing) varied as the 1.9 power of the submergence; and the maximum torque recorded as the gate leaves left the mitered position (opening) varied as the 2.2 power of the submergence.

2.1.3.1.3 For the Panama Canal Linkage, W.E.S. Report 2-651 indicates that the maximum torque recorded as the gate leaves entered the mitered position (closing) varied as the 1.5 power of the submergence; and the maximum torque recorded as the leaves left the mitered position (opening) varied as the 1.7 power of the submergence.

2.1.3.1.4 For the Ohio River Linkage, W.E.S. Report indicates that the maximum torque recorded decreased as the 1.0 power of the operating time for both the closing and opening cycles.

2.1.3.1.5 For the Modified Ohio River Linkage, W.E.S. Report 2-651 indicates that the maximum torque recorded decreased as the 1.1 power of the operating time for the closing cycle and as the 1.5 power for the opening cycle.

2.1.3.1.6 The report indicates for the Panama Canal Linkage that the torque decreased as the 1.1 power of the operating time for closing cycle and as the 1.3 power for opening cycle.

2.1.3.1.7 Tests reveal that an increase in gate torque occurs when the clearance under the gate leaf is decreased regardless of the length of operating time. Data from these tests are presented in Figure 2-5 and indicate the percentage increase in model torque for various bottom clearances relative to the torque observed with a 76 mm (3 inch) bottom clearance. These data can be used to adjust the observed torque values determined for a model bottom clearance of 76mm (3 inch) when gate length is 0.91 meters (3 feet).

2.1.3.1.8 Non-synchronous operation of miter gates results in slightly lower forces on the leading leaf. Forces on the lagging gate leaf are greater during most of the closing cycle and less during the opening cycle than similar forces recorded for synchronous operation of the gate leaves. The greatest reduction in torque appears to be when one gate is leading the other by approximately 12.5 percent of the total operating time.

2.1.3.1.9 Barges in the lock chambers are found to have negligible effect on gate operating forces.

2.1.3.1.10 Chamber length does affect gate torque in that the longer the chamber the less the torque. As the length of time is increased, the less the chamber length effects the gate torque. Insufficient data is available to set up any definite adjustment factors for correcting for chamber length

2.1.3.1.11 Torque caused by gate pintle friction is of small magnitude and should not be considered in load calculations.

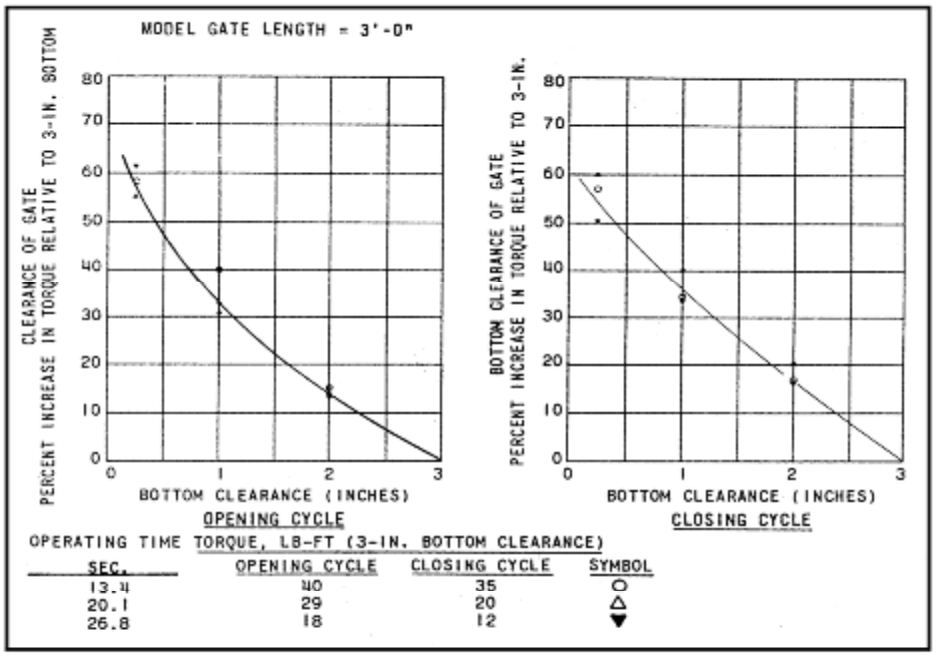

Figure 2-5. Relative Effect of Gate Bottom Clearance on Torque, 1.2 Meter (4 feet) Submergence

2.1.3.1.12 When computing operating torque for a "Direct Connected" type miter gate drive, the curves shown on Plates B-8 and B-9 may be used. The curves are results of prototype tests made on Claiborne Lock and show gate torque plotted against percentage "closed". The torque from these curves may be adjusted to suit new conditions by the application of Froude's Law as described in detail in Paragraph 2.1.4 below. Since the curves were based on the use of a three speed pump to slow the gate travel at beginning and end of cycle, it will be necessary to make similar assumptions on the proposed lock. Assuming a fast delivery rate of the pump at 1.0, the medium delivery rate should be 0.8 and the slow rate adjusted to 0.3 of the fast rate. A normal cycle would be to operate 10 percent of the gate angular travel at 0.3 capacity, 10 percent at 0.8 capacity, 60 percent at 1.0 capacity, 10 percent at 0.8 capacity and 10 percent at 0.3 capacity. A comparison study made between this type of operation and the Panama type linkage indicates that the direct connected machine, if operated as stated above, will compare

favorably with the Panama machine in angular gate velocity (degrees per second) at all positions. Assuming that the angular velocities compare with the Panama type machine, the maximum torque will vary as the 1.5 power of the submergence (closing) and 1.7 power of the submergence (opening). The operating time should vary as the 1.1 power for closing and the 1.3 power for opening cycle.

2.1.3.2 Temporal Loads. Temporal hydraulic loads or surges are temporary changes in water level resulting in a differential water level on opposite sides of a lock gate. These surges or differential heads may be caused by overtravel of water in the valve culvert during filling or emptying, wind waves, ship waves, propeller wash, etc. Depending on the circumstances, this differential has been observed to vary from 0.3 to 0.6 meters (1 to 2 feet). These forces do not affect the machinery power requirements, but they do affect the design of the gate machine components when the gate is at the recess or mitered position. These forces have been known to fracture gate struts and shear sector pins. See paragraph 2.1.2 for the description of these loads.

2.1.4 Determination of Machinery Loads.

2.1.4.1 Normal Loads. Normal miter gate operating machinery loads are difficult to determine and should, whenever possible, be determined from model or prototype tests. Data compiled by the Special Engineering Division of the Panama Canal Zone taken from tests made on the existing locks and a model for the third locks and model studies included in W.E.S. Technical Report No. 2-651, appear to be the most reliable sources for obtaining miter gate machinery loads available at this time. When using data from the model tests, it will be necessary to adjust the data on the basis of the scalar ratio between the model and the proposed lock. The length of the gate leaf is normally used for determining the scalar ratio. From the scalar ratio, Froude's Law comparing prototype to model would be as follows:

$$\text{Scalar Ratio} = \frac{\text{Length of Prototype Leaf}}{\text{Length of Model Leaf}} = L_R$$

$$\text{Volume, weight and Force} = (L_R)^3:1$$

$$\text{Time and velocity} = L_R:1$$

$$\text{Torque} = (L_R)^4:1$$

When using machines having the Ohio Linkage, the Modified Ohio Linkage, or the Panama Canal Linkage, the forces on any size miter gate may be obtained from curves shown on Plates B-10 through B-13 which are plotted from the results of the W.E.S. and Panama Canal

Model Tests. Readings from the curves must be factored according to Froude's Law for submergence, time of operation and clearance under gate. Curves are based on lock chamber lengths of 183 meters (600 feet) or greater. Forces for shorter lock chambers would be slightly greater. This should be considered when replacing the miter gate machinery on 17.1 meter (56 feet) wide locks, which usually have 109.8 meter (360 feet) chamber lengths.

2.1.4.1.1 Computation of Pintle Torque for Panama Canal and Ohio Type Linkage. If the proposed lock gate is in the same scalar ratio with respect to length of gate, submergence and time of operation as shown on curves and the type of linkage is the same, the pintle torque would equal the pintle torque at each position indicated on the curves multiplied by the ratio of gate leaf lengths to the 4th power.

$$P_1 = P(L_1 / L)^4$$

Where

P_1 = pintle torque of proposed lock gate at selected position

P = pintle torque shown on curve of model study at selected position

L_1 = leaf length, pintle to miter end, proposed lock gates

L = leaf length, pintle to miter end for curves that have been plotted on model study.

In the event the ratios of gate lengths L_1/L submergence S_1/S and the square of the time of operation T_1/T are not of the same scalar ratio, the formula should be expanded as follows:

$$P_1 = P(L_1 / L)^4 (S_1 / S_2)^x (T_2 / T_1)^y$$

where

P_1, P, L_1 and L = same as above

S_1 = submergence of proposed lock gate

S = actual submergence of model gate upon which curves are based

S_2 = adjusted submergence of model lock gate = $S(L_1 / L)$

T_1 = time of operation of proposed lock gate (See arc of travel adjustment below)

T = actual time of operation of model gate upon which curves are based

T_2 = adjusted time of operation of model lock gate = $T\sqrt{L_1} / L$

X = power to which submergence must be raised, for particular type linkage

Y = power to which time must be raised, for particular type linkage

NOTE: If only one ratio for either submergence or the square of the operating time is not of the same ratio as gate leaf length L_1/L then only the ratio not in agreement with L_1/L need be considered in the formula.

If the arcs of gate travel differ from that shown on model curves, it will be necessary to adjust the operating time of the proposed lock T_1 to use in the above formula as follows:

Let T_A = adjusted operating time, or

$T_A = T_1$ (arc of travel, proposed lock)/(arc of travel, on model curves) $= T_1(K_1/K)$

T_A must be substituted in formula for T_1

Use of the above formula results in a pintle torque which makes no allowance for motor slip since all of the model curves were based on uniform speed of hydraulic cylinder or constant RPM of the motor. If a portion of the required gate torque curve overloads the motor, the resulting time of gate operation would be slower, which in turn would result in lower gate torque during this period. The same would occur when operating the gates with a hydraulic cylinder. Overloading the cylinder would result in some of the oil being bypassed through relief valves which in turn would slow down the gate during the overload period. When using the Ohio type linkages and torque data from W.E.S. Technical Report No. 2-651, the pintle torque P_1 should be adjusted for under gate clearance in addition to submergence and time. The percentage increase in torque can be obtained from Figure 2-5. Where a proposed lock is not subjected to flooding, electric motor operation with Panama type or Modified Ohio River type linkage may be considered. A high torque, high slip motor should be used and should be selected so that the normal full load torque available would not be exceeded by the required torque of the machine more than 15 to 20 percent of the time. Peak torque during the overload period should not exceed 150 percent of full load torque. This can be determined by plotting the required torque based on curves computed from model tests described above and by plotting available motor torque curves at various degrees of slip and superimposing these curves over the required curves. Typical calculations for determining loads using the Ohio River type linkage (hydraulic operation) are shown on Plates B-14 through B-25. Calculations for determining loads using the

Panama Canal type linkage (electric motor operation) for the same design conditions are shown on Plates B-26 through B-38.

2.1.4.1.2 Computation of Pintle Torque for Direct Connected Linkages. The kinematics of this type of machine would be developed so as to provide the shortest practicable piston stroke. This will require the gate pin connection to be located out from the pintle a distance of 20 - 25 percent of the gate length, and the centerline of the cylinder gimbal bracket to be located so as to give the best effective operating arm about the pintle at each position throughout the entire stroke of the piston. With use of this linkage and a uniform traveling piston, gate angular velocity will be greatest at the extreme closed or open position of the gate. Uniform travel of the piston is therefore undesirable, and it will be necessary to slow down the speed of the piston near the closed and open positions by use of a variable volume pump in the oil circuit. By slowing the travel near open or closed position of the gate, angular travel rates will be comparable with the Panama Canal linkage. Figure 2-6 shows comparison curves for angular velocity of gate plotted against percent "closed" for Panama Canal Third Locks linkage and for Claiborne Lock direct connected linkage with and without variable speed control. Time of operation should be selected for the proposed lock that will give angular gate velocities approximately equal to the velocities shown on the curve for Panama Canal. Gate pintle torque should then be taken from the prototype curves shown on Plates B-41 and B-43, and adjusted by means of Froude's Law of Similarity to the submergence and time requirements of the proposed lock using the same exponents as used for the Panama Canal linkage. Load computations for a direct connected machine are shown on Plates B-39 through B-48.

2.1.4.2 Temporal Loads. The resulting machinery loads for the case of temporal loading are based on a differential head, provided in paragraph 2.1.2.2, superimposed on the normal gate submergence. These loads are considered applicable only when the gate is in the mitered or recessed positions. These forces are resisted by a load brake for mechanical drives or a high pressure relief valve for hydraulic drives. For this load condition, a 33.33 percent overstress is allowed for component design. An automatic gate latching device may also be used in the recess position. Only the sample computations for the Ohio River type machine shown on Plates B-14 through B-25 includes the temporal load computations.

2.1.5 Operating Machinery Control.

2.1.5.1 Hydraulically Operated Machines. A complete description of the two basic types of hydraulic systems for locks along with pertinent hydraulic system design criteria is presented in Chapter 5. Several types of control schemes have been used for these systems, including manual, solenoid or servo operated control valves, and variable frequency drives.

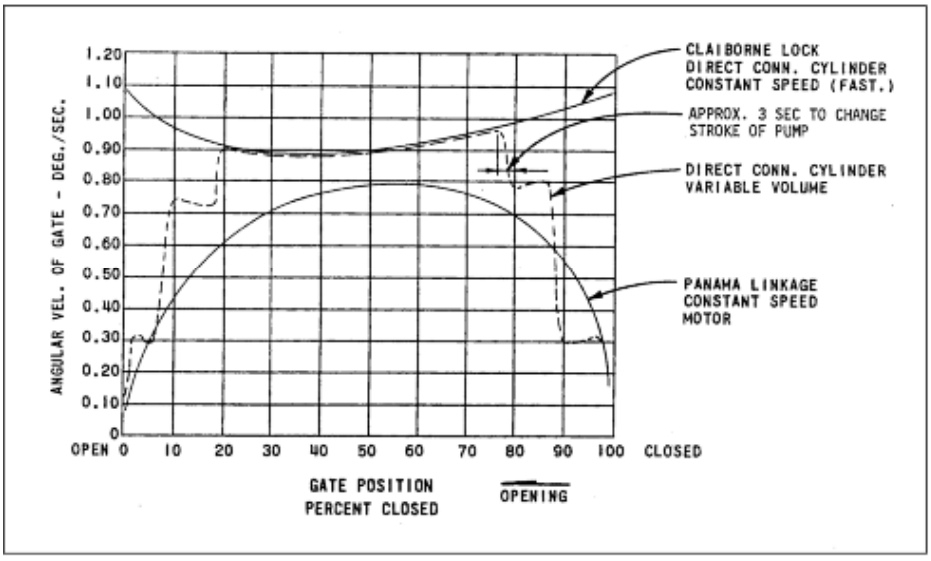

Figure 2-6. Gate Velocity Comparison Curves

2.1.5.1.1 Manual controls for conventional hydraulic systems utilize lever operated control valves to control the flow of oil to the cylinders. These levers are usually located on a lock wall near each set of gates.

2.1.5.1.2 Electrical controls for conventional hydraulic systems utilize solenoid or servo operated four-way valves to control the flow of oil to the cylinders. This makes the system more flexible and enables the inclusion of an electrical interlock between the miter gates and lock culvert valves so that the lock chamber water level cannot be changed before all gates are closed. Changing the water level in the lock chamber before the gates are closed creates a differential head on the partially closed gates which could cause them to slam shut damaging the gate and/or gate machinery. This type of control is recommended over manual control. A schematic hydraulic system diagram of this control system is shown on Plates B-49 and B-50.

2.1.5.1.3. VFD controls for integral hydraulic systems, primarily used with self-contained actuators, utilize a bi-rotational hydraulic pump and reversible electric motor to control the flow of oil to the cylinder. The speed and direction of each actuator is controlled by a VFD, located in the motor control center, which controls the speed and direction of the electric motor.

2.1.5.1.4 The majority of locks using electrically operated control valves or variable frequency drives have two points of control, usually located in control shelters near each set of miter gates. Some locks utilize a single point of control, usually located in a centralized control building. Each control point consists of a console with all control functions associated with a normal lockage. These functions usually provide control for miter gates, culvert valvesl, bubbler system, lock lighting, navigational signals, alarms, etc. Control consoles located on the lock wall may become inundated during high water. Therefore these consoles should be designed so that they are located above the anticipated high water (by elevating the control shelters) or so that they can easily be removed. See Chapter 4 for more information on controls.

2.1.5.1.5 Electrical interlocks are used in the control circuit to produce the desired operating sequence. Limit switches are used to prevent the upstream culvert valve from being opened when the downstream gate and/or valves are open and vice versa. These interlocks are also used to prevent gates slamming or unintentional changes in chamber water level. A logic diagram for this system is shown on Figure 2-7. See Chapter 4 for more information on controls.

2.1.5.2 Electrically Operated Machines. At projects where flood waters will not overtop the lockwall or machinery recesses, a modified Ohio machine with electric motor drive may be economical and desirable. Control consoles similar to that described above for the hydraulic system are usually used. Electrical valve-gate interlock features should be similar to that described above for the hydraulic system.

2.1.6 Miscellaneous Equipment and Systems.

2.1.6.1 Machinery Stops. In order to deal with ordinary construction tolerances, a means must be provided to adjust the miter gate machinery linkage at installation. It is usually desirable to provide approximately 50 mm (2 in.) of overtravel at each end of the hydraulic cylinder to allow for adjustment. With the linkage connected and the miter and recess positions established for the gate, stops are installed and adjusted to limit the machinery motion to these extreme positions. For Ohio River type machines that are operated by hydraulic cylinders, one stop is placed so as to stop the rack when the gate is mitered; another is placed to stop the sector arm when the gate is recessed. Details of this arrangement are shown on Plate B-3.

2.1.6.2 Automatic Greasing. A system should be provided to automatically grease each miter gate pintle bushing and gudgeon pin as shown in Figure 2-8. The system should dispense a measured amount of grease to each location automatically during gate movement. An automatic grease system is available with a built-in programmable controller, which will allow variations in grease cycles, and quantity of grease provided. Since the grease systems have to be field tuned, for a particular lock application, the programmable controller should be a desirable option. The pintle bushing should be designed to permit the installation of an O-ring seal and a grease return

line which can be monitored to insure grease delivery to the pintle bushing. The system should include automatic monitoring equipment to warn of a malfunction. Special consideration should be given to the layout and sizing of the grease lines to insure proper operation and minimum pressure loss. Grease lines should be stainless steel pipe of adequate wall thickness for the anticipated pressures. Grease lines should be located in areas of the gate that afford the greatest degree of protection from damage due to ice and drift. The pumping unit should be located near the gate to minimize grease line length. Provisions should be made to remove the pumping unit if flooding is likely. For pintle lubrication details, see Plate B-51.

Self-lubricated bushings can provide an alternative to greased bushings for the pintle and gudgeon pin, thus eliminating the need for an automatic greasing system. The Construction Engineering Research Lab evaluated field performance and conducted lab tests of commercially available self-lubricating materials used in lock and dam applications. Paragraph 5.1.3.4 provides additional information on the use of self-lubricating pintle bushings.

2.1.6.3 Automatic Gate Latches. Latches are normally provided for holding the gates in the recess. The latches should be designed to automatically latch the gate when it comes into recess. Release of the latches should be accomplished automatically each time a “gate close” function is initiated. Recess latch is shown on Plate B-52. The system should be provided with “latched” and “unlatched” position indication.

2.1.6.4 Maintain Pressure System. A maintain pressure system can be provided to hold miter gates closed with hydraulic pressure. The system is designed to hold the gate leaves together against wind loading or small water surges prior to changing the chamber water level. Maintain pressure is used for upstream gates during the emptying cycle and downstream gates used during filling cycle. This maintain pressure system is activated by the lock operator depressing a pushbutton on operator console. This system can be deactivated manually by the operator or is automatically deactivated when the gates under maintain pressure are opened or after the valves are opened for a predetermined time to allow an adequate head of water on the gates to keep them mitered. The maintain pressure system should utilize the valve slow or the lowest pumping rate available. The tandem center hydraulic system is not preferred, but if used, or if retrofitting a tandem center system, the maintain pressure system will provide pressure to the miter gate cylinder in the gate closed position through the use of standard bladder type accumulator. This accumulator, located in each miter gate machinery recess, will be charged and pressure maintained through a pilot-operated check valve installed in series with each miter gate cylinder. A pressure switch, sensing accumulator pressure, will insure adequate pressure through a time delay circuit. An indicator lamp on the control console will be illuminated when pressure in the maintain pressure system is adequate. At the same time the gate four-way valve will be automatically shifted from "close" to "neutral" position. An alternative to this system is

specifying cylinders with “zero leakage” piston rings and rod seals and providing pilot operated check valves to lock the cylinder in the gate closed position.

2.1.6.5 Fire Protection System. EM 1110-2-2608 provides fire protection system requirements for navigation locks. In operation, this system provides a dense spray of water on the gate surface between the gate and barges which may be on fire in the lock chamber. This spray would keep the gates cool and minimize distortion in the event of a fire. This system consists of a series of water spray nozzles located along the top of each miter gate leaf discharging into the lock chamber. These spray nozzles are fed by high capacity raw water pumps. One pump is provided for each lock chamber. Control stations are located near each gate with controls for starting and stopping the raw water pump and also for opening and closing the motorized valve in the supply line to each set of gate nozzles. Many of the fire protection provisions presented in EM 1110-2-2608 apply to both miter and sector gate locks.

2.1.6.6 Overfill and Overempty Control System. The overfill and overempty system should be evaluated on a case by case basis and should be considered mainly on high lift locks or locks with long narrow approaches. A control system has been developed to eliminate overfilling and overemptying of the lock chamber. This system measures water levels by sensing the back pressure of compressed air constantly bubbling through tubes extending below the surface of the water. This system compares the level of water in the lock chamber with that of the upper pool when filling and the lower pool when emptying and at a predetermined time begins closing the fill or empty valves respectively. This action dissipates the energy of flowing water in the culverts, thereby eliminating lock overfill or overempty. Another system uses underwater pressure transducers installed in the lock chamber and upper and lower approaches. These transducers measure the static head pressure, which translates to the depth of water where they are located. By comparing the depth of water in the chamber with the upper and lower approaches, the system determines when the water level in the lock is equalized with the upper or lower pools.

2.1.7 Pintle Assembly. The pintle and related components support the dead weight of each leaf of the miter gate. The pintle assembly is made up of five major components, pintle socket, pintle, pintle shoe, pintle bushing, and pintle base. See Chapter 5 for pintle bushing information.

2.1.7.1 Pintle Socket. The pintle socket is made of cast steel and is connected to the bottom of the lower girder web of the miter gate with turned monel or stainless steel bolts. The bolts are to carry the gate leaf reaction in shear but as added safety factor a thrust plate should be welded to the underside of the bottom girder web, with a milled contact surface between the plate and pintle socket. The minimum plate size should be 31.75 mm (1.25 in.) in thickness and 0.3 meters (1 foot) with a length as required by the girder web. The socket encloses the bronze bushing which fits over the pintle ball. An allowable bearing stress of 10 Mpa (1500 psi) is desirable but

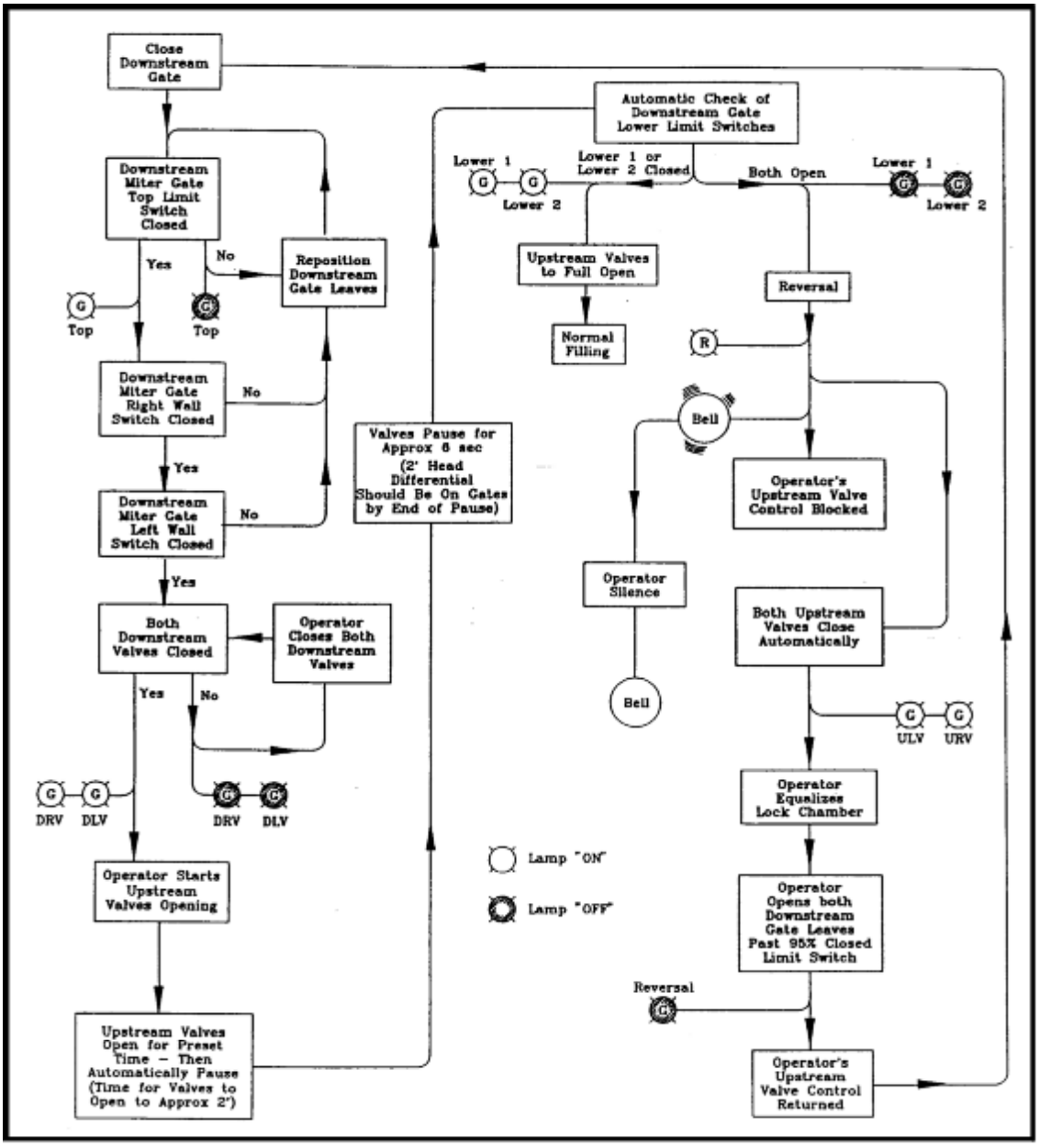

Figure 2-7. Lock Filling Sequence (Lock Emptying Sequence is Similar).

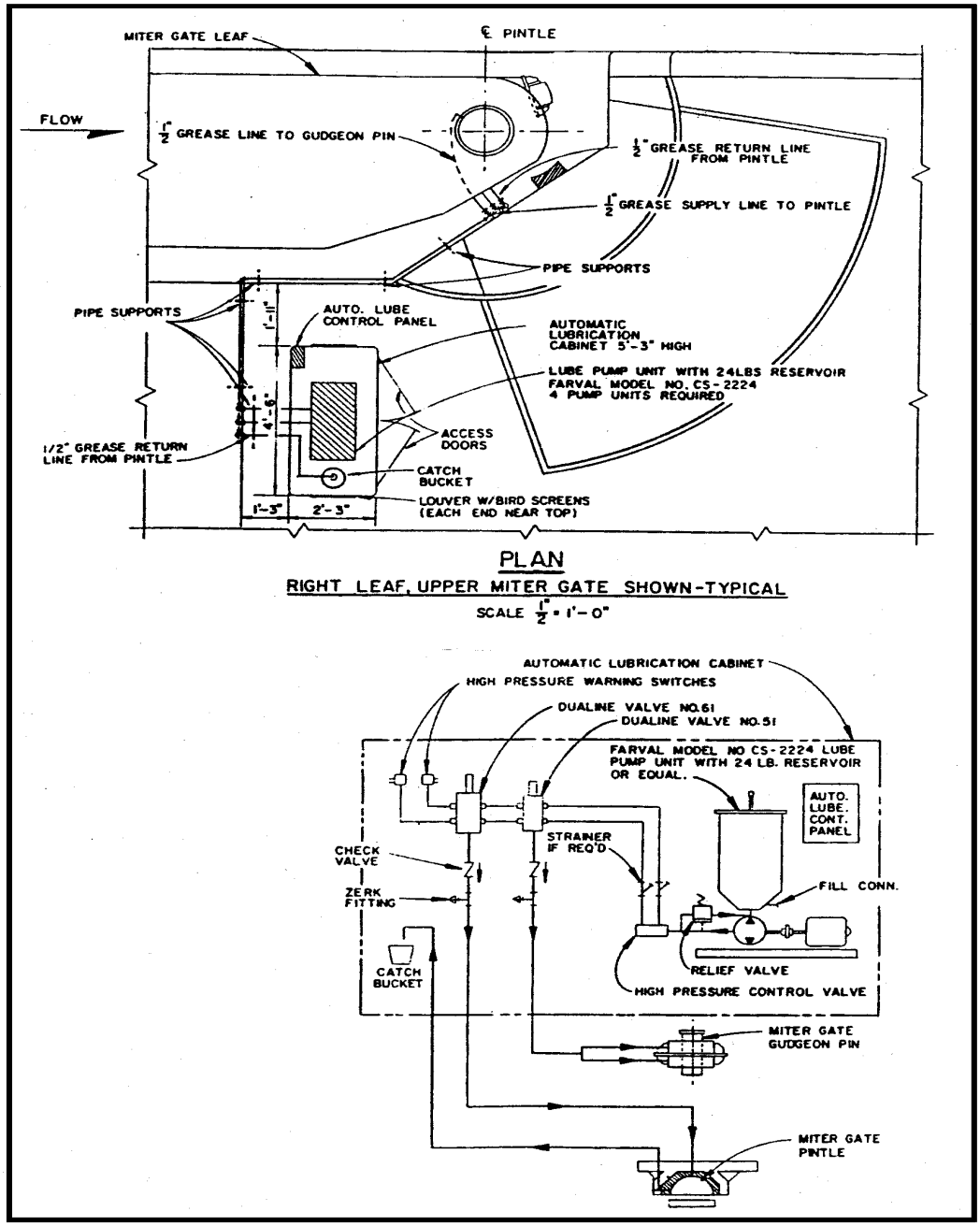

Figure 2-8. Automatic Lubrication System

may not always be practical. The automatic greasing system allows a higher bearing stress but should not exceed 17 Mpa (2500 psi). See Plate B-51 for additional information.

2.1.7.2 Pintle. The pintle generally made of cast alloy steel ASTM A148 GR 80-40 or ASTM A27 GR 70-40, usually 0.25 to 0.50 meters (10 to 20 inches) in diameter, with the top bearing surface in the shape of a half sphere and a cylindrical shaped bottom shaft. Pintles have also been produced with bearing surfaces of stainless steel deposited in weld passes to a thickness of not less than 4.8 mm (0.1875 inch) and machined to the required shape. Pintles for salt or brackish water locations should be forged alloy steel with the stainless steel bearing surface. The pintle ball and bushing are finished to a 16 microinch finish where the two come in contact.

2.1.7.3 Pintle Assemblies. Pintle assemblies used for horizontally framed miter gates are generally two types - floating and fixed.

2.1.7.3.1 The fixed pintle is recommended for new construction and major gate rehabilitation. The pintle fits into the pintle shoe, which is bolted to the embedded pintle base. The degree of fixity of the pintle depends on the shear capacity of the pintle shoe bolts. The pintle should be designed so that after relieving the load on the pintle by jacking, the pintle assembly is easily removable. See Plate B-53 for typical fixed pintle. The pintle base, made of cast steel, is embedded in concrete, with the shoe fitting into a curved section of the upper segment of the base. The curved section of the same radius as the pintle shoe is formed so that under normal operation the reaction between the shoe and base is perpendicular to a line tangent to the curve of both shoe and base at the point of reaction.

2.1.7.3.2 The floating pintle is not recommended for new construction. The pintle is fitted into a cast steel shoe, with a shear key provided to prevent the pintle from turning in the shoe. The shoe is not fastened to the base, allowing the gate leaf to move outward in case of debris between the quoin and wall quoin preventing the leaf from seating properly. See Plate B-54 for typical floating pintle. Damage to pintle bearing has occurred frequently with this type of pintle due to the relative movement between the pintle shoe and base. The movement can consist of the shoe sliding on the base during leaf operation from either the mitered or recessed position, until the leaf reaches approximately the mid-position, at which time the shoe slides back against the flange on the base. This type of movement is generally visually detectable and causes serious wear. However, an alternative to the floating circular shoe is to make the shoe three sided with one corner having the same radius as the circular shoe, and attach a steel keeper bar to the embedded base in front of the shoe. This would prevent the shoe from rotating on the embedded base and prevent the pintle from moving out of pocket. Again, the degree of fixity would depend on the shear capacity of the bolts in the keeper bar. This alternative will meet the requirements of the fixed pintle as well as the capacity to minimize damage in case of emergency.

2.1.7.4 Pintle Base. The pintle base is designed so that there will be a compressive force under all parts of the base. The value of the compressive force on the concrete will vary from a maximum on one edge to a minimum on the opposite edge. Computations are based on that portion of the pintle above the point under consideration acting as a composite unit. The overturning moment can be found from the horizontal force on the pintle and will be resisted by the reaction on the section being investigated. The eccentricity of the vertical force can be determined by the angle the resultant makes with the horizontal and the distance between the horizontal force on the pintle and reaction on the pintle base.

2.1.7.5 Pintle Centerline. The centerline of the pintle (vertical axis of rotation) is located eccentric (upstream) relative to the center of curvature of the bearing face of the quoin contact block. This center of curvature is on the thrust line. The centerline of pintle should be located on the point of intersection of the bisector of the angle formed by the mitered and recessed gate leaf work lines and the perpendicular line from the bisector to the quoin contact point resulting in an offset of approximately 180 mm (7 inch). Studies and experience show that eccentricities arrived at by the above described method will reduce the contact time between the fixed wall quoin and the contact block of the moving gate leaf sufficiently to minimize interference and binding between the bearing blocks. The 180 mm (7 inch) offset will be exact and constant for all gates with the same miter angle and distance from the face of lock chamber to the recessed work line (0.37 meters [1.2 feet]).

2.2 Sector Gate.

2.2.1 General Description.

2.2.1.1 Wire Rope and Drum. Sector gates have traditionally been driven by either a wire rope and drum mechanisms, shown on Plate B-55 or by rack and pinion, shown on Plate B-56. The wire rope and drum mechanism was designed to be an inexpensive method of operating infrequently used gates, such as floodgates. A disadvantage of the wire rope and drum mechanism is that the wire ropes tends to lose tension with use, thereby requiring periodic retensioning and replacement. Also, because the wire rope drum position does not accurately correlate to the gate position, limit switches must be located on the gate or in the gate recess, potentially exposing them to damage.

2.2.1.2 Rack and Pinion. The rack and pinion mechanism, are mainly used on lock gates or gates that have a high frequency of use. Once the rack and pinion is aligned there are no further adjustments or readjustments. In addition, the gate drive pinion gear accurately correlates to gate position thereby permitting the use of limit switches which can be located to operate directly from the machinery. A disadvantage with the rack and pinion mechanism is that wear in the gate's hinge and pintle eventually manifest itself in a tightening of the gear mesh, however, by

this time it is usually wise to either replace or rotate the gate bushings. The rack and pinion gears should have a diametrical pitch of 1 or more to minimize the effects of changes in gear clearance resulting from the relative radial movement of the gate rack and pinion gears.

2.2.1.3 Direct Acting Hydraulic Cylinder. A third design uses a direct acting hydraulic cylinder as shown on Plate B-57. The direct acting hydraulic cylinder has been around for a number of years, but is not in wide-spread use. To reduce the cylinder's stroke length, the cylinder's rod end is attached to the gate's top frame near the hinge and at an operating radius that is approximately 1/5 that of either the rack and pinion or cable and drum mechanisms. The short operating radius imposes higher stresses on the gate and machinery then the previous two designs. The advantages of the direct operating cylinder are fewer machinery components, the cylinder is self-aligning with the gate, and limit switches can be built directly into the cylinder where they are not easily damaged.

2.2.1.4 Power Transmission. Mechanical and hydraulic are the two types of transmissions that provide power to the three gate operating mechanisms described above. The hydraulic transmission usually consists of an electric motor driven hydraulic pump, control valves and, except for the direct acting hydraulic cylinder machine, a hydraulic motor. Hydraulic transmissions are inexpensive and provide flexibility in control and physical layout. The control flexibility of the hydraulic transmission is particularly suitable for lock gates. The mechanical transmission usually consists of an electric motor, motor brake and multiple shaft speed reducer. Mechanical transmissions are dependable and require little maintenance which makes them suitable for flood gates.

2.2.2 Design Considerations and Criteria.

2.2.2.1 General. Hydraulic loading on sector gates are produced from direct heads and reverse heads. A direct head is a head differential across the gate with the highest water elevation on the convex side of the skinplate. A reverse head is a head differential across the gate with the highest water surface on the concave side of the skinplate. Operating forces from direct heads are friction from the pintle and hinge, hydraulic forces on the seal bracket, and bottom seal friction. Operating forces from reverse heads are hinge and pintle friction, hydraulic forces on the seal brackets, hydraulic forces on the vertical steel members near the nose of the gate, and friction from reverse head seals. Unpredictable forces such as those caused by silt, debris, wear, and construction inaccuracies should be accounted for by applying a 1.5 application factor to the calculated loads. Ice loading should be calculated separately and then added to all other calculated loads. Sample calculations for determining closing loads with a reverse head are shown in Appendix C.

2.2.2.2 Hydraulic Loads. Difficulty was experienced in the design of the first sector gates when operated with reverse heads. Prototype tests showed that hydrodynamics forces on the vertical steel member near the nose of the gate created much greater loads than anticipated during design. As a result, extensive tests were made to obtain operating hydraulic forces on sector gates and to account for the hydrodynamics forces. These tests made by Waterways Experiment Station (WES) are published in the following reports.

- Technical Report No. H-70-2, titled "Operating forces on Sector Gates Under Reverse Heads and "Appendix A."
- Technical Report No. H-71-4, titled "Calcasieu Saltwater Barrier prototype Sector Gate Tests".
- Technical Report No. 2-309, titled "Filling Characteristics, Algiers Lock Intracoastal Waterway, Gulf Section, Louisiana" and Appendix. The appendix covers gate operating forces and modifications to reduce operating forces.
- Technical Report No. CHL-TR-03-3, titled "Filling and Emptying System for Inner Harbor Navigation Canal Lock Replacement, Louisiana".

The third and fourth reports are for a tests conducted on models of modified sector gates referred to as ear sector gates. In plan view an ear sector gate resembles a traditional sector gate with the addition of two protruding radial members at each end of the gate called ears. Ear sector gates are designed to pass water through the center of the lock and through the gates recesses as the gates opens. This enables the lock chamber to fill and empty at a faster rate and with less turbulence, since not all the water is entering or leaving the lock chamber through the center opening as is done with non eared gates. This feature is of greater importance with increase in lock lift. The design also prevents siltation in the gates' recesses. Algiers Lock, located on the Intracoastal Waterway and the Mississippi River at New Orleans has ear sector gates designed for a differential head of 5.6 meters (18.5 feet), about 3.6 meters (12 feet) higher than what would be practicable with non eared gates.

2.2.2.3 Hinge and Pintle Friction. Hinge and pintle frictional torque is the torque generated at the bearing surfaces between the stationary part of the bearing and the movable part. The bearing load is the load resulting from the gate weight, hydrostatic loads and reaction loads generated by the operating machinery. Based on using self aligning hinge and pintle, a bearing frictional factor of 0.25 for steel on bronze should be used. If either a cylindrical hinge or pintle is used the designer should anticipate much higher frictional loads resulting from possible construction misalignment. WES has found that cylindrical hinge and pintle friction for Calcasieu Saltwater Barrier sector gates were 4.5 times the calculated value.

2.2.2.4 Bottom Seal Friction. Bottom seal friction is caused by the differential hydrostatic head across the seal and force of precompressing the seal 6.4 mm (0.25 in.). A coefficient of

friction of 1.0 should be used even for Teflon coated rubber seals. Initially the seals on a sector gate are set with approximately 0 to 0.8 mm (0 to 1/32 in.) of clearance. The 6.4 mm (0.25 in.) precompression accounts for gate sag, hinge and pintle wear and variations in gate temperature between submerged members and non-submerged members.

2.2.2.5 Contingencies. After the gate loads are calculated, an application factor of 1.5 should be applied to the combined friction and hydraulic loads. The application factor accounts for transient and unpredictable forces such as those resulting from silt, debris, hinge and pintle wear and construction inaccuracies.

2.2.3 Operating Procedure/Controls

2.2.3.1 Low Head Locks. Low head locks are locks that have a lift of 1.5 meters (5 feet) or less. To fill and empty a low head sector gated lock chamber the operator opens the filling or emptying sector gates from 0.3 to 0.9 meters (1 to 3 feet). The gates are then held in this position until the differential water level across the gates is within 150 mm (0.5 foot). At this time the gates are then fully opened. A single operating speed of between 20 to 35 degrees of gate rotation per minute with cushioned gate start and stop has been found to be satisfactory. With a hydraulic transmission, cushioned gate start and stop can be incorporated into the hydraulic system using ramp proportional valves or other flow control devices. Machinery brakes should also have cushioned movement.

2.2.3.2 Flood Control Gates. Single speed operation of between 5 to 7 degrees of gate rotation per minute has been found to be satisfactory. At this low speed of operation, cushion gate start and stop are not required.

2.2.3.3 Medium to High Lift Gates. Medium to high lift locks are locks with lifts of over 1.5 meters (5 feet). For medium to high lift locks, where the gates are used to fill and empty the chamber, a two-speed operating system is required with a slow initial opening speed. The slower speed enables the lock operator to accurately set the gate opening in order to prevent excess chamber turbulence. The slow speed should be field adjustable with a range of from 1.5 to 5 degrees of gate rotation per minute. A higher speed of 20 to 35 degrees of gate rotation per minute can be used once the differential head across the gate is within 150 mm (0.5 foot). Starts, stops and changes in gate speed should be cushioned.

2.2.4 Special Design Consideration. The gate operating machinery is crucial to the operation of a lock or floodgate structure. Reasonable means should be made to incorporate into the design a high degree of reliability and serviceability.

2.2.4.1 Auxiliary Drives. For most hydraulically driven gates an auxiliary drive has proven valuable. The auxiliary drive should be basic and provide an operating speed that is 1/3 to 1/4 that of the primary drive. The auxiliary drive should consist of a pump and motor connected permanently to the gate's hydraulic system. Other hydraulic system components, such as valves, solenoids and hoses should be accessible and easily replaceable. Mechanically operated gates do not normally require an auxiliary drive. However, flood control gates with mechanical drives should have auxiliary power sources, such as auxiliary generator, hand crank or air motor with air storage.

2.2.4.2 Hydraulic System Contamination. Water in the hydraulic system is one of the primary reason for hydraulic component failures. Water usually infiltrates the system from the moisture in the air that is exchanged in the reservoir through the breathers. To eliminate this source of contamination the hydraulic reservoir should be located in a room with dehumidification and/or be equipped with a bladder that prevents direct exchange with outside air. A bladder is an elastomeric air chamber that is connected to the reservoir. The bladder expands and contracts as the air volume changes in the reservoir, eliminating the need for a breather. Reservoirs using bladders should be pressure tested and equipped with relief valves. Contamination can also be eliminated by using integral power units, that have sealed reservoirs. These units combine a hydraulic power with a hydraulic cylinder to form a self-contained actuator that is completely sealed and submersible. Self-contained actuators are now used for miter gate machinery on several locks. See Chapter 5 for additional information.

2.2.4.3 Material Selection. When practicable, machinery components that are potentially subject to damage, should be constructed from field weldable materials. This is especially important for items requiring a long lead time to acquire or would take a substantial effort to replace, such as gear racks, drive pinions and machinery bases.

2.3 Vertical Lift Gates (Locks).

2.3.1 General Description and Application. Vertical lift gates can be used as upstream lock operating gates, emergency gates, auxiliary gates, and ATide@ or AHurricane@ gates. Vertical lift gates are often used when the lock has a design criterion, which requires operation under heavy ice or debris conditions. Emergency gates are used to close off a lock chamber under flowing water conditions with the main operating gates damaged. Vertical lift gates are used as auxiliary lock gates, in tandem with miter gates, on some locks. When used as auxiliary gates, the vertical lift gate provides more efficient performance during ice and debris conditions than a miter gate. Vertical lift gates are also used as tidal barriers or AHurricane@ gates in coastal areas. A typical lift gate leaf consists of a number of large horizontal steel girders, intercostal web girders, an upstream skinplate and end framing. Downstream skinplates may

also be added, for strength and debris control, when adequate access is provided for inspection and maintenance.

Lift gate systems of one to three leaves have been used for lock operations. Lift gate leaves designed for unbalanced head operation often have upstream and/or downstream reaction rollers to reduce friction and improve vertical stability. Design of vertical lift gate leaves is detailed in EM 1110-2-2701. The only major disadvantage to the use of vertical lift gates is a significantly higher construction cost.

2.3.1.1 Upstream Lock Gates. Most upstream lock lift gates are multiple leaf gate systems. The use of multiple leaves permits operation at high river levels by using the upstream, or lower, leaf as a movable sill. The upstream leaf can also serve as the primary operating leaf, at normal pool levels, until a damaged operating leaf can be repaired. The downstream leaf is generally designed with an overflow nappe section to allow ice and debris to be passed over the gate while submerged under head. This overflow feature is one of the primary reasons for use of this type of gate. This gate design is particularly useful for locations that operate all winter with floe ice conditions. Each gate leaf is operated by a separate hoist connected to each end of the leaf. The hoists, which each have their own electric motor, are electrically, or electronically, synchronized to insure that the ends of the leaf remain relatively level at all elevations. Most upstream lock lift gates are operated by an electric motor driven, geared hoist system with a counterweight system to reduce operating power requirements. Two typical systems are found on the Mississippi River. These systems are used as sole upstream lock operating gates on the two heaviest usage locks on the Mississippi River. Typical gate arrangements are shown on Plates B-58 and B-59.

2.3.1.1.1 Three Leaf Lift Gate Hoist. This hoist uses two sets of round wire ropes at the end of each gate leaf. One set of cables passes over two sets of sheaves to connect to a steel counterweight container, filled with removable lead weights, which travels in a shaft in the lock wall. The other set of cables is connected to a spiral-wound steel drum attached to a large spur gear. The pinion, which drives the spur gear/drum assembly, is coupled to a parallel shaft reducer. The parallel shaft reducer input shaft is connected to a DC motor on one side and an electric shoe holding brake on the other side. This hoist is located within the lock walls, at one of two separate levels at the existing installation, but could be located above the lock wall. A typical design is shown on Plates B-60 and B-61.

2.3.1.1.2 Two Leaf Lift Gate Hoist. One typical two leaf gate system uses a machine, which consists of a roller chain connected to the each end of the gate leaf, which travels over idler sprockets and a drive sprocket to connect to a concrete counterweight inside a shaft in the lock wall. Two slightly different hoist machines, located within the lock walls, drive the upstream and downstream leaves. The downstream leaf drive sprocket is powered by a series of spur gears, a parallel shaft reducer and an electric motor controlled by a Variable Frequency

Drive (VFD) system. A holding brake is mounted adjacent to the electric motor. The upstream leaf, which is basically a moveable sill, operates much slower than the downstream leaf due to

an additional 9 to 1 ratio worm reducer, located between the motor and the parallel shaft reducer. A typical design is shown on Plates B-62 and B-63.

2.3.1.2 Emergency and Auxiliary Lock Gates. These gates are not the primary operating gates for the lock. The gates are used when failure of the miter gates occurs, or if it is necessary to pass floe ice or debris. Under ice or debris conditions, the miter gates are secured in the open position with the lift gate closed. The lift gates are lowered to allow ice or debris to pass through an open lock chamber past both sets of miter gates, which are retracted in their recesses. These types of gates typically consist of two leaves, one upstream or lower leaf, and one downstream or upper leaf. The downstream leaf is equipped with wheels to facilitate raising in flowing water. The upstream gate should be designed to be raised only under balanced head or a swell head of one foot or less. The upstream leaf is normally operated in steps as shown in the operating procedures on Plate B-64.

2.3.1.2.1 Reeved Lift Gate Hoist. One typical hoist system uses a double grooved hoist drum driven by open spur gears, a parallel shaft reducer, a shoe-type holding brake and an electric motor. The rope drum is designed to wrap several layers of round wire rope. One wire rope attaches to each end of a gate leaf through a multi-part reeving system with sheaves attached to the end of the gate leaf. One of the wire ropes must pass through a tunnel beneath the lock chamber to additional idler sheaves on top of the opposite lock wall from the drum. This machinery is mounted above maximum high water on top of the lock wall. A typical design is shown on Plate B-65.

2.3.1.2.2 Alternative Design. A hoist system similar to the arrangements in Upstream Lock Gates above could be used for this type of gate. Since this would not be a principal operating gate, the size of the machinery could be reduced to reflect actual operating procedures for reduction of the construction costs. Option 2.3.1.1.2 would be less advantageous, past roller chain design tended to become troublesome when not properly designed, operated and lubricated regularly. See paragraph 3.1.5 for roller chain design information.

2.3.1.3 ATide@ or AHurricane@ Gates. This type of vertical lift gate is generally a single leaf gate, which can be used at either end of a lock in coastal areas. This type of gate is raised when not in use, permitting normal traffic to pass underneath the gate leaf.

2.3.1.3.1 Tide Gate Machinery. A typical tide gate machine has tandem, dual drums driven by a single pinion connected to a parallel shaft reducer. The reducer is driven by an electric motor, with dual drive shaft extensions, through an electric holding brake. The extra motor shaft extension permits connection of a hydraulic Aemergency@ lowering mechanism.

The electric motor has two speeds. The low speed is used to start and stop the gate. The two drums wind both ends of a continuous wire rope, which lifts the gate through a series of sheaves. One dual drum serves each end of the gate leaf. Two of the sheaves mounted on the

gate leaf serve as equalizing sheaves to even the line pull if one drum winds slightly more wire rope than the other. Each drum is precision grooved so that it winds the same amount of wire rope on each layer. A typical hoist arrangement is shown on Plate B-66.

2.3.1.3.2 Emergency Lowering Mechanism. The emergency lowering mechanism consists of a radial piston-type hydraulic pump connected to the electric motor shaft extension and associated controls. The controls include a flow control valve, check valve, tubular-type oil cooler, piping and a reservoir. When the gate is lowered without electric power, the weight of the gate turns the hydraulic pump, through the wire rope and gears. The oil, from the pump, is circulated through the flow control valve, which restricts the flow to control speed and transmit heat to the oil to be removed by the oil cooler.

2.3.2 Design Criteria.

2.3.2.1 Upstream Lock Gates. There are four typical design criteria to investigate for normal operation of multi-leaf vertical lift gate machinery for upstream lock gates. The first condition is normal operation with balanced head on each side of each leaf. This condition occurs when the gates are opened to allow the tow into the chamber. The second condition is holding the gate against an unbalanced head. This condition occurs when the tow is in the chamber at tailwater prior to opening the downstream gates. The third condition is ice or debris flushing operation, where the machinery holds the gate against an unbalanced head with flow over the downstream leaf. The fourth condition is ice or debris flushing operation, where the downstream leaf machinery must raise the leaf to block the flowing water. The first three conditions are applicable to upstream and middle leaf machinery.

2.3.2.1.1 Gate Operating Speeds. Upstream leaves, used as moveable sills, are often designed for 5 to 25 mm per second (1 to 5 feet per minute) operating speed. Since these leaves are usually designed to compensate for overall increased pool conditions, high speed is not an important requirement. An upstream leaf that is used as a main operating leaf should probably have an operating speed similar to the middle leaf requirements. Middle leafs, which are often used during normal operation, can be designed for an operating speed in the range of 25 to 50 mm per second (5 to 10 feet per minute). Middle leaf speeds are often determined by an effort to minimize overall operating time by having the middle leaf complete its travel slightly before the downstream leaf. Downstream leaves are usually designed for dual, or multi-, speed operation with maximums of 50 to 60 mm per second (10 to 12 feet per minute). Minimum speeds for downstream leaves are determined by the torque requirements for raising the gate in flowing water conditions.

2.3.2.1.2 Hoist Drive Motors. While dual speed operation can be accomplished with a two speed electric motor, the original design for the two leaf lift gate hoist used two separate motors, one high speed and one low speed, with a ASynchro-tie@ system for Askew@ correction. These motors were eventually replaced with a single motor controlled by a Variable Frequency Drive (VFD). Modern technology has provided the DC drive and the VFD, which provide widely variable speed and torque at a competitive cost. The three leaf lift gate hoist uses a DC drive for each leaf, which provides infinitely variable speed between 400 and 1200 revolutions per minute (rpm) of the motor with constant horsepower. This system allows ice flushing at low rpm and high torque, while normal, balanced head operation can occur at high rpm and low torque.

2.3.2.2 Emergency and Auxiliary Lock Gates. Load cases similar to Upstream Lock Gates paragraph, above, must be evaluated for emergency and auxiliary lock gates which will be used as primary operating gates for the lock.

2.3.2.2.1 Gate Operating Speeds. Upstream leaves, used as moveable sills, are often designed for 5 to 25 mm per second (1 to 5 feet per minute) operating speed. Since these leaves are usually designed to compensate for overall increased pool conditions, high speed is not an important requirement. Downstream leaves are usually designed for two speed operation with maximums of 25 to 50 mm per second (5 to 10 feet per minute). Minimum speeds for downstream leaves are determined by the torque requirements for raising the gate in flowing water conditions. Actual speed requirements will be determined by frequency of use, impact to traffic and benefit/cost analysis.

2.3.2.2.2 Hoist Drive Motors. While dual speed operation can be accomplished with a two speed electric motor, there may be some cost and operational benefits to using a variable frequency drive system. The VFD would be particularly useful for gates that require operation under unbalanced head. For more detailed information see Chapter 4.

2.3.2.3 ATide@ or AHurricane@ Gate Machinery. This machinery must be designed for raising and lowering against differential head, as well as additional wind load on the exposed portion of the gate leaf. The gate machinery must be designed to lift the gate leaf above the highest elevation necessary to clear traffic beneath the gate. The machinery must be raised above the maximum high water elevation in an environmental enclosure. Where cable fleet angles, approaching the drums, exceed 1.5 degrees, a fleet angle compensator should be provided.

2.3.2.3.1 Gate Operating Speed. Tide gates are typically operated at speeds between 25 and 50 mm per second (5 to 15 feet per minute), or the speed required to completely open in approximately 10 minutes.

2.3.2.3.2 Wind Load. The minimum wind load should be assumed as 0.9 kPa (20 pounds per square foot). Actual environmental data, which indicates greater loading, should be used whenever available.

2.3.2.4 General Machinery Component Design. The general design criteria for machinery components are indicated in Chapter 5. Other hoist specific design criteria are presented herein.

2.3.2.4.1 Hoist Load Distribution. The normal hoist load is considered to be equally divided between the two sides of the gate leaf. The main upstream lock gate, emergency and auxiliary lock gate machines use separate hoists or an equalizing arrangement to distribute load. Hoists should be designed to withstand the locked rotor torque of the motor, applied to a single end of the gate leaf, without damage to the hoist.

2.3.2.4.2 Wire Rope Design. Wire rope design should be in accordance with the provisions of EM 1110-2-3200. Wire rope design is a complex issue dependent upon the amounts and types of bending and connections involved in the design. In general vertical lift gate machines can not change wire ropes as often as the manufacturers recommend, therefore, conservative safety factors should be used in the design. Minimum factors of safety should be 5.0 applied to the maximum normal load with no rope exceeding 70 percent of the breaking strength for locked rotor torque of the motor. Wire rope lubrication is extremely important for installations with frequent bending of the wire ropes. There may be some benefit to the use of resin socketing material in lieu of the traditional zinc. Sockets used with the resin material must be designed with narrower tolerances to restrict rope bending at the socket, however they improve field installation, repair and corrosion protection.

2.3.2.4.3 Sheave Design. Sheaves should be a manufacturer=s standard design when used in a single rope, multiple reeving application. Custom sheave designs may be required for parallel multiple wire rope installations. Sheaves may have internal bronze bushings, permanently lubricated bushings or antifriction bearings according to their accessibility for maintenance. Sheave diameters are determined from the wire rope diameter in conjunction with common industry practice. The minimum recommended sheave to rope diameter ratios are provided in EM 1110-2-3200. Larger ratios are recommended for extended service and extensive reeving.

2.3.3 Controls. Control systems are discussed in Chapter 4.

2.3.4 Special Design Considerations. Special design considerations require coordination among the structural, hydraulic, mechanical and electrical designers to provide a proper operating system.

2.3.4.1 Upstream Lock Gates. These considerations are pertinent to two system examples indicated for principle lock operating gates.

2.3.4.1.1 Gate Cable Connection. The three leaf lift gate hoist uses multiple round wire ropes in parallel to lift the gate leaves. The original gate design must place the gate connection at the horizontal center of gravity. This is essential to permit proper equal tension in each of the hoist and counterweight wire ropes. The structural engineer, who designs the gate leaf, must commit to this principle at the very beginning of his design. If this is not designed properly, the gate can tilt in the slot. A tilted gate may become Astuck@ in the slot, which could cause the wire ropes to continue to unwrap even though the gate is not moving. Such an event creates a dangerous and unsafe situation. The gate may fall from this "stuck@ position, which can damage the wire rope or anyone in the vicinity of the wire rope. It is also important that the cables be connected to the gate with a positive means of holding the sockets in contact with the gate. Bolts, pins or other devices, which provide proper tension adjustment, are required. Another beneficial design consideration would be a method, such as turnbuckles, located in a protected, but accessible, location, for individual wire rope tension adjustment. The top of the gate leaf is, in general, the most accessible location on the gate.

2.3.4.1.2 Slack Cable Safety Devices. Slack cable safety devices are an essential safety feature for wire rope operated lift gate hoists. The three leaf lift gate hoist uses three separate devices to stop the lift gate hoist motors in order to prevent unwrapping of the wire rope from the drum when the gate is not moving. The primary system is an encoder connected to a counterweight sheave. Since the counterweight is directly connected to the gate, it will only move when the gate moves. Therefore if the counterweight sheave is not rotating, the gate is probably not moving. When the encoder indicates no movement of the gate during movement of the hoist, it stops the hoist drive motor. The second safety device is a photoelectric cell, which is placed close to a vertical run of wire ropes from the hoist drum. When the cables go slack, indicating cable movement but no gate movement, the cell stops the hoist drive motor. The third level of safety devices is a simple limit switch which is activated by any sagging wire ropes in the horizontal run between the idler sheaves on the lock wall. For additional detailed information see Chapter 4.

2.3.4.1.3 Positional Encoders. Positional encoders, connected to the machinery, are essential to the operation of the lift gate machinery. Encoders are used to provide the elevation position indication and level control, or Askew@ correction, of the gate leaves. Encoders can be used to indicate speed, motion or actual angular position of various machinery components, which can be translated to gate leaf motion. For more detailed information see Chapter 4.

2.3.4.1.4 Chain Design. Roller chain assemblies for gate hoists are typically custom designed for the loads generated by the operating conditions. It is logical to design all operating

chains for the lift gates to the maximum requirements, such that they are interchangeable for all gate leaves. The two leaf lift gate hoist chain was designed as two parallel chains connected by a clevis plate at each end. Each chain has two types of links; a fixed link, which connects two side bars using a steel pin, and a pivoting link, which uses a bushing between the two side bars and the steel pin. Both types of links are connected by the same steel pins, but the pivoting link

side bars are inside of, and next to, the fixed link side bars. The pivoting link side bars are separated by a roller which revolves around the bushing on the inside radius and contacts the sprocket tooth on the outside radius. This design uses grease lubrication through the steel pins to reduce friction between the bushing, pin, roller and side bars. The two clevis plates have pivoting connections at the gate leaf and the counterweight to reduce chain bending and equalize the load between chain strands. A considerable amount of chain wear has been noted with this design. Several improvements to chain materials have had little effect upon the wear. Current investigations appear to indicate that machinery alignment, counterweight alignment or gate leaf alignment may be the cause of the apparent upstream movement of the chain against the drive and idler sprockets. See Chapter 3 for alternate roller chain design.

2.3.4.1.5 Sprocket Design. A typical sprocket is a high strength steel casting, similar to an ASTM A 148, Grade 120-95, with an overall hardness of 285-300 BHN. Tooth contact surfaces are surface hardened to a minimum of 450 BHN. A typical sprocket for a 305 mm (12 inch) pitch chain has eight teeth. Sprockets are keyed to the drive shafting for convenient removal.

2.3.4.1.6 Counterweight Design. The main design consideration for counterweights should be flexibility. The counterweight should have a method for convenient addition or subtraction of weight. The counterweight shaft, or enclosure, should be designed for convenient access for maintenance and inspection. Beams or hoists should be provided to allow handling of weights. A maintenance structure for suspending the counterweights will be needed while performing work on the gate leaves and hoists. Lead pig weights, installed in a structural steel container, were used for the three leaf lift gate hoist counterweight. The two leaf lift gate hoist uses a poured concrete counterweight with some additional steel weights added for adjustments.

2.3.4.1.7 Gate Girder Design. The structural engineer should be reminded that the operating machinery is not designed to force the gate leaf down. Since the gate leaf must lower due to its own weight, it is important that the structural designer compensate for any air trapped under the horizontal girders. Gate leaves, which are suspended completely, or partially, in air during unbalanced head, tend to trap large amounts of air beneath the girders. This trapped air has been known to make a 127 tonne (140 ton) gate leaf float. This problem was partially solved by boring large holes in the main girders and nappe section to release the air as the gate lowered under balanced head. It continues to be a problem with the existing gates. Additional holes have been drilled after several floating Aincidents@. It would be wise to eliminate lower

flanges, which trap air, or include Aair-release@ provisions in the girder design, to prevent the need for compromising the structural girder design with retrofitted holes.

2.3.4.1.8 Gate Wheel Design. Gate wheel design should be coordinated with the gate structural design. It is important for all reaction rollers to have angular flexibility to adjust for the flexure of the gate. This can be accomplished with a crowned tread wheel, a spherical bearing or a combination of these items. The reaction rollers should be as large a diameter as practical to properly distribute load to the roller track. The roller track should be thick precipitation-hardened stainless steel, which can be easily replaced. Each wheel should be designed for loads generated if only one third of the wheels are actually in contact. This criterion will help to compensate for construction tolerances on the concrete gate recess and roller track installation tolerances. Upstream rollers are beneficial in maintaining gate leaf stability, as well as equal hoist tension. These rollers could be alternated in vertical location with the downstream rollers to encourage maximum bearing against the roller tracks, while providing maximum space for each roller.

2.3.4.1.9 Dogging Devices. The structural engineer should be encouraged to design a manual Adogging@ device which will permit supporting the gate leaf above the pool level near the top of the lock wall. This device would be essential to proper maintenance and inspection. This device should permit access to the gate end framing, wire rope or chain connection, reaction rollers, wheels, seals and other adjustable or maintainable equipment.

2.3.4.1.10 Nappe Breakers. Nappe breakers are additions to the nappe section of a downstream gate leaf that are designed to reduce vibrations transmitted to the machinery while water is flowing over the nappe. The three leaf lift gate design required a simple structural alteration to the nappe section to eliminate harmful vibrations.

2.3.4.1.11 Machinery Base Anchorage. It is essential for the structural engineer to design, detail, and specify minimum anchorage requirements for the machinery support base in accordance with the loads supplied by the machinery designer. The maximum holding load, against differential head, can often dictate the design of machinery support anchor bolts. The holding brake load, once exceeded, allows the gate to lower with the shoes still applying friction to the brake wheel to slow movement until it reaches the sill. Maximum locked rotor torque, and maximum normal motor load torque (as available for DC drive, Variable Frequency Drive, or standard electric motor) should be compared with the holding loads to determine the maximum force applicable to the anchor bolts. The holding brake load will control the loading during static, non-powered, conditions. The locked rotor torque generally applies as the maximum operating torque available on one end of the gate leaf while the motor is energized. Anchor bolts need to be detailed on the drawings, and clearly specified, to have bolt heads or hooks, to insure full development of strength. Overlapping concrete shear cone analysis needs

to be part of any anchor bolt group design. Anchor bolt material, spacing and adjustment provisions should be clearly shown on the contract drawings and reviewed by the government during the shop drawing submittal process.

2.4 Culvert Tainter Valve.

2.4.1 General Description and Application. The most common type of filling and emptying system used in locks is a longitudinal culvert in the lock wall extending between the upper and lower pools. Each culvert has a streamlined intake at the upstream end and a diffusion exhaust at the downstream end. Culvert flow is distributed in and out of the lock chamber by wall ports or secondary culverts in the floor of the chamber. Each culvert has two valves; one for filling and one for emptying the chamber. The filling valve allows upstream pool to fill the chamber while the emptying valve remains closed. The emptying valve allows the chamber to drain to the downstream pool while the filling valve remains closed. The most common type of filling and emptying valve is the tainter valve. The tainter valve is constructed in a manner similar to the tainter gates typically used as spillway gates. Additional information on culvert valves is available in EM 1110-2-1610, AHydraulic Design of Lock Culvert Valves@.

2.4.1.1 Tainter Valve. Many of the navigation locks on the upper Mississippi River have conventional tainter gate type valves. The valve is oriented with the trunnions downstream of the skinplate causing the convex surface of the skinplate to face the flow and seal along the upstream end of the valve well. The hoist for this valve uses two stainless steel round wire ropes, one at each end of the valve. The wire rope is connected to the convex side of the tainter valve at the lower main girder near the side strut location. The valve should be designed to provide sufficient weight to close even under flowing water conditions, since the cable system is incapable of forcing the valve to close. The cables are connected to two grooved drum assemblies which are flanked by spherical roller bearing pillow blocks. The drum assemblies are connected to a quadruple reduction parallel shaft reducer by geared flexible couplings. The parallel shaft reducer has dual extended input shafts to connect to the electric drive motor and hoist holding brake. A rotary limit switch assembly is connected to the brake shaft extension. The holding brake is typically a solenoid operated shoe brake. The electric drive motor may be a custom two-speed constant torque motor or a variable frequency drive (VFD) motor system (for multi-speed operational requirements). Hardwired overtravel limit switches are also used to supplement the rotary limit switch assembly. A slack cable limit switch is provided to prevent unspooling of the cable when the gate is not moving. A typical design is shown on Plate B-67.

2.4.1.2 Reverse Tainter Valve. Many of the navigation locks on the Ohio River, as well as some of the newer ones on the Mississippi River, Red River and Arkansas River, have reverse tainter gate type valves. The valve is oriented with the trunnions upstream of the skinplate

causing the convex surface of the skinplate to face downstream and seal along the downstream end of the valve well.

2.4.1.2.1 Hydraulic Operated Bellcrank Type Hoist. The typical hoist for the reverse tainter valve on large capacity locks consists of a trunnion mounted hydraulic cylinder, a bellcrank, a gate operating strut, a support base and bearings. The hydraulic cylinder has a center trunnion mounted on pillow block bearings. The cylinder rod is attached to one corner of a truss-type bellcrank made of steel pipe. The bellcrank has one corner, about which it pivots,

connected to a pair of pillow blocks. The other corners are connected to the hydraulic cylinder and the gate strut. The gate strut is a steel pipe assembly that contains clevis and eye end connections and a spring assembly. The gate strut connects the bellcrank to the tainter valve. All pivot connections are equipped with bushings and pins. Lubrication piping is routed to all bushings and pillow blocks. Lubrication piping can be routed inside struts and bellcrank tubes to reduce exposure to damage. A typical design is shown on Plate B-68.

2.4.1.2.2 Alternative Design. Some locks use a vertically mounted hydraulic cylinder with a sealed bonnet around the cylinder rod end to exclude water from the valve well. The vertical cylinder does not pivot, but extends straight downward. The cylinder rod drives a pivoting gate operating strut that is connected to the gate. The connection between the cylinder and the strut is guided along the wall of the recess. A typical design is shown on Plate B-69.

2.4.1.2.3 Direct-Acting Cylinder Design. A direct-acting cylinder design, which pivots about a cap end trunnion with the rod connected directly to the tainter valve, has been used successfully. This system is submerged in operation. Some evidence of water leakage mixing with the hydraulic fluid does indicate sealing problems. This system might be applicable to locations where frequent inspection and maintenance of the cylinders is feasible. Extreme measures are required to protect and maintain seals and piping/hose from debris or ice. A typical design is shown on Plate B-70.

2.4.2 Design Criteria.

2.4.2.1 Tainter Valve. The tainter valve machinery must be designed to raise the valve under flowing water conditions at the full maximum head differential. Hydraulic design engineers should provide the gate operating speeds, including any pauses, to be used at the various head conditions planned for the specific lock location. Operating speeds are based upon specific flow conditions designed to safely fill or empty the lock chamber without producing unsafe hawser stresses, air entrainment or other operating conditions dangerous to the tows or their personnel. The tainter valve should be designed to provide sufficient weight to close even under flowing water conditions, since the cable system is incapable of forcing the valve to close. Closing under flowing water conditions may be required where ice or debris flushing

operations are typical, especially at locks with upstream lift gates. It is customary to design all tainter valve machines identically for economy of fabrication.

2.4.2.1.1 Tainter Valve Hoist Loads. The hoist should be designed for the gate connection load due to flowing water under the valve, the buoyant (submerged) weight of the valve, the weight of the operating cable assemblies, the side seal friction, the trunnion bushing friction under maximum normal flowing water load, and the head differentials across the top seal of the valve. Evaluation of these loads is a mandatory minimum requirement for machinery design.

2.4.2.1.2 Valve Operating Speeds. Typical operating speeds for tainter valves should permit opening in approximately one to three minutes. Operating times as long as fifteen minutes have been used at the John Day Lock. Cavitation problems caused revision of the John Day Lock=s opening time to less than seven minutes, including a five minute pause at 30 percent open. Discharge conditions, such as scour, low water or temporary moorings, could also result in the need for slower valve operating speeds.

2.4.2.1.3 Hoist Drive Motors. Dual speed operation can be accomplished with a two speed electric motor. For multi-speed operation an electric motor controlled by a Variable Frequency Drive (VFD) would be more practical. Modern technology has provided the DC drive and the VFD, which provide widely variable speed and torque at a competitive cost. These devices can provide almost infinitely variable speed with constant horsepower. This system allows ice flushing at low rpm and high torque, while normal, balanced head operation can occur at high rpm and low torque. For more detailed information see Chapter 4.

2.4.2.2 Reverse Tainter Valve. The machinery must be designed to raise the valve under flowing water conditions at the full maximum head differential. Hydraulic design engineers should provide the gate operating speeds, including any pauses, to be used at the various head conditions planned for the specific lock location. Operating speeds are based upon specific flow conditions designed to safely fill or empty the lock chamber without producing unsafe hawser stresses, air entrainment or other operating conditions dangerous to the tows or their personnel. The tainter valve machinery should be designed to provide sufficient force to close even under flowing water conditions without causing damage by pushing the tainter valve against the sill in the culvert. Closing under flowing water conditions may be required where ice or debris flushing operations are typical, especially at locks with upstream lift gates. It is customary to design all tainter valve machines identically for economy of fabrication.

2.4.2.2.1 Tainter Valve Hoist Loads. The hoist should be designed for:

- The gate connection load due to flowing water under the valve,

- The buoyant (submerged) weight of the valve,
- The weight of the gate operating strut assemblies,
- The gate operating strut bushing friction,
- The side seal friction,
- The trunnion bushing friction under maximum normal flowing water load,
- The head differentials across the top seal of the valve,
- The bellcrank bushing friction, and
- The hydraulic cylinder trunnion bushing friction.

Evaluation of these loads is a mandatory minimum requirement for machinery design.

2.4.2.2.2 Valve Operating Speeds. See paragraph 2.4.2.1.2 for design criteria.

2.4.2.2.3 Hydraulic System Design. The tainter valve machinery control circuit for a conventional hydraulic system should include a solenoid or servo-controlled four-way directional control valve, an adjustable pressure relief valve for opening operations, an adjustable pressure relief valve for closing operations, and a remote pilot operated counterbalance valve. The directional valve should be designed with a blocked center or tandem center spool providing positive pump output to the cylinder in both directions of operation. Tainter valves should not be allowed to lower through the hydraulic control circuit by only their own weight. Such operation could lead to undesirable shock and vibration within the control circuit. The pressure relief valves are provided to protect the controls and cylinders from excessive pressure, which could lead to damage of the strut, bellcrank or associated bearings and pins. The counterbalance valve is the typical method to prevent an overrunning load, while providing a positive locking of the cylinder, at any valve position, until hydraulic pump pressure is applied to the cylinder for actual planned movement. The tainter valve machinery control circuit for a self-contained actuator, with integral hydraulic system, is similar except for directional control. Instead of a four-way valve, this system uses a bi-rotational hydraulic pump and reversible electric motor to control direction.

2.4.2.2.4 Instrumentation. The installation of pressure transducers, and pressure gauges, at strategic locations within the hydraulic circuit, would provide useful information in the adapting of the hydraulic system to actual lock operating conditions.

2.4.2.3 General Machinery Component Design. The general design criteria for machinery components are indicated in Chapter 5. Other hoist specific design criteria are presented herein.

2.4.2.3.1 Wire Rope Design. See paragraph 2.3.2.4.2 for design criteria.

2.4.2.3.2 Trunnion Mounted Hydraulic Cylinder. Trunnion mounted hydraulic cylinders, used for bellcrank type tainter valve machinery experience a kinematic motion that places large side loads on the upper half of the rod end seals. This usually leads to premature seal wear and chatter marks on the cylinder rod. Special attention is necessary for the proper design of seals, bushings and rod material.

2.4.2.3.3 Bellcrank. The bellcrank must be specified with proper dimensional tolerances to insure that it rotates in a very accurate vertical plane. The assembly should have shop testing after fabrication to insure that all shaft pin holes are parallel and all arms are straight within maximum standard tolerances. There should be mandatory survey requirements through its entire range of motion after installation. Past installations, with poor Quality Control, have caused accelerated wear of bushings, clevises and eyes, leading to premature failure of machinery. Another important consideration is the protection of the shaft pin/bushing lubrication lines against damage by debris or ice. Lubrication piping can be placed inside the bellcrank tube arms except at the pivot joints. Other forms of guards should be provided to protect the hoses used at pivot joints.

2.4.2.3.4 Valve Operating Strut. The valve operating strut generally contains a spring assembly to assist in positive closure against the culvert sill. Several types of springs have been used, including coil springs, ring springs and, Belleville washer type springs. Coil springs appear to give superior performance because of their minimum lubrication requirements. Coil springs should be designed to not fully compress during normal operation. Since the ring and Belleville types are enclosed in the strut tube, there is no easy way to verify grease effectiveness without actual disassembly of the strut. Therefore performance can only be measured by failure. A number of failures have been observed with the shattering of ring springs and Belleville springs in normal service. Detailed inspections show that the components have not received sufficient lubricant on the essential rubbing surfaces to perform adequately.

2.4.2.3.5 Support Base. The tainter valve machinery support base is designed to properly align the trunnion mounted hydraulic cylinder and the bellcrank pivot trunnion bearings. This is essential to ensuring that the cylinder, bellcrank and strut operate in an accurate vertical plane. It is essential that the support base be inspected after fabrication to establish the relative positions of the machinery mounts to ensure the accurate vertical plane. The support base must installed level in order to allow a properly constructed bellcrank and trunnion support assembly to move in an accurate vertical plane.

2.4.2.3.6 Bushings. The largest cause of problems with bearings is misalignment of the system. The root cause is addressed in the previous paragraphs. However, additional problems

have been noted due to improper lubrication. Lubrication piping to bushings is frequently damaged by ice or debris. Greaseless bushing have been tested at some locations and are a satisfactory alternative to lubricated bushings. CERL Technical Report 99/104, Greaseless Bushings for Hydropower Applications: Program, Testing, and Results, provides comparative information about these type of bearings.

2.4.2.3.7 Directional Control Valve. There is no benefit to designing a single-acting hydraulic cylinder system which does not have a four-way directional control valve to direct positive pump delivery to the cap end side of the hydraulic cylinder. Systems, which are designed to allow the weight of the reverse tainter valve to lower the valve, do not take

advantage of the speed and force controlling features of a Apower-down@ control system. Locks, which have situations where closing the tainter valves against flowing water have some benefits, will most certainly need double-acting control.

2.4.2.3.8 Pressure Relief Valves. Pressure relief valves should be designed for the maximum pressure range which will not cause damage to the system. The smallest commercially available range that will meet system requirements should be used, since this will yield the maximum setting sensitivity. A pressure relief valve should be provided to prevent excessive pressure upon closing the tainter valve against the sill plate in the culvert. A pressure relief valve should be provided to prevent excessive pressure upon opening the tainter valve to the full open position.

2.4.2.3.9 Counterbalance Valve. A remote pilot-operated counterbalance valve is required to hold the tainter valve open, at any position that it is stopped, until positive pump pressure is applied to move the tainter valve.

2.4.3 Controls. Appropriate control devices are detailed in Chapter 4.

2.4.4 Special Design Considerations. Special design considerations require coordination among the structural, mechanical and electrical designers to provide a proper operating system.

2.4.4.1 Tainter Valve. These considerations are pertinent to conventional tainter gate type valves.

2.4.4.1.1 Slack Cable Safety Devices. Slack cable safety devices are an essential safety feature for wire rope operated tainter valve machinery. The tainter valve could seize against the valve chamber walls, or above the culvert floor, on debris or zebra mussels. The slack cable safety device will shut down the motor before too much cable is unspooled. This will prevent safety problems involved with guiding the wire rope back onto the drum properly.

2.4.4.1.2 Positional Encoders. Positional encoders, connected to the machinery, are essential to the operation of the tainter valve machinery and lock electrical control system. Encoders are used to provide the elevation position of the bottom of the tainter valve, which can control the filling, emptying and miter gate operation interlocks. Encoders can be used to indicate speed, motion or actual angular position of various machinery components, which can be translated to tainter valve motion. For more detailed information see Chapter 4.

2.4.4.1.3 Tainter Valve Design. The structural engineer should be reminded that the operating machinery is not designed to force the gate leaf down. Since the gate leaf must lower due to its own weight, it is important that the structural designer compensate for any uplift

hydraulic loads. EM 1110-2-1610 has an extensive discussion of these uplift tendencies with respect to valve design and head conditions.

2.4.4.1.4 Limit Switches. Limit switch locations must be coordinated with the structural designer to prevent overtravel in the valve opening position.

2.4.4.2 Reverse Tainter Valve. These considerations are pertinent to reverse tainter gate type valves.

2.4.4.2.1 Positional Encoders. Positional encoders, connected to the machinery, are essential to the operation of the tainter valve machinery and lock electrical control system. Encoders are used to provide the elevation position of the bottom of the tainter valve, which can control the filling, emptying and miter gate operation interlocks. Encoders can be used to indicate speed, motion or actual angular position of various machinery components, which can be translated to tainter valve motion. For more detailed information see Chapter 4.

2.4.4.2.2 Limit Switches. Magnetic-operated limit switches are generally provided, which actuate on the arc of the bellcrank movement. These switches, and their electrical appurtenances, should be fully submersible.

2.4.4.2.3 Lubrication System. Where grease lubricated bearings, or permanently lubricated bearings with grease supplementary provisions, are provide for bellcranks and strut connections, the supply lines should be mounted inside the structural tubes. Flexible hose connections may be required to connect piping across pivoting joints. All exposed piping and hose should be provided with rigid structural steel guards designed to provide maximum protection against waterborne debris and ice.

2.4.5 Other options. Butterfly valves, vertical sluice gates and roller gates have been used with various culvert schemes to fill and empty locks. A rotary culvert valve system (basically a tainter valve on its side, similar to a sector gate design) has been extensively evaluated for filling/emptying duty. One butterfly valve plan uses submersible hydraulic cylinder operators, at

a location in the upstream sill, to fill the lock chamber. Another "thru-the-sill" filling/emptying system, under development for new lock construction, will use bonneted slide valves and dry operating galleries located in the upper miter sill and lower river wall. Model testing of this system, conducted by the Waterways Experiment Station (WES), was successful. Thru-the-sill systems are desirable for new projects because they allow the use of more cost effective lock wall construction methods.

CHAPTER 3
Spillway Gate Operating Equipment

3.1 Tainter Gate
- 3.1.1 General
- 3.1.2 Wire Rope Electric Motor Hoist
- 3.1.3 Direct Connected Hydraulic Cylinder
- 3.1.4 Round Link Chain Hoists
- 3.1.5 Engineering Steel Chain
- 3.1.6 General Design Considerations

3.2 Vertical Lift Gate (Spillways)
- 3.2.1 General
- 3.2.2 Direct Connected Hydraulic Cylinder
- 3.2.3 Screw Stem Hoist

3.3 Wicket Gate
- 3.3.1 General Description
- 3.3.2 Design Criteria
- 3.3.3 Controls

3.4 Hinged Crest Gate
- 3.4.1 General Description
- 3.4.2 Design Considerations
- 3.4.3 System Components
- 3.4.4 Gate Control
- 3.4.5 Gate Operation

3.5 Submergible Tainter Gate
- 3.5.1 General
- 3.5.2 Design considerations and criteria
- 3.5.3 Determination of machinery loads

CHAPTER 3
Spillway Gate Operating Equipment

3.1 Tainter Gate.

3.1.1 General. The tainter gate is considered the most economical, and usually the most suitable, type of gate for controlled spillways because of its simplicity, light weight, and low hoist-capacity requirements. The principle elements of a tainter gate structure are the skinplate assembly, the members supporting the skinplate assembly, the end frames, the trunnions, the anchorages and the hoisting machinery. Tainter gate design information is provided in EM 1110-2-2702. This sub-chapter presents information about wire rope electric motor driven, direct connected hydraulic cylinder, round link chain pocket wheel, and round link chain grooved drum hoisting machinery that have been successfully used in the past. Whenever possible and practicable the designer should consider incorporating redundancy into the gate operating system.

3.1.2 Wire Rope Electric Motor Hoist. This type of machinery usually consists of two similar but opposite-hand hoist units mounted on piers and arranged to lift each end of the gate. The drive unit usually consists of electric motor, worm reducer, DC magnet brake, parallel shaft speed reducer, open gearing and rope drum. The driven side contains only the enclosed speed reducer, open gearing and rope drum. The two units are kept in synchronism by a cross shaft carried in bearings that are supported from a bridge connecting the two piers. A general arrangement of a wire rope electric hoist is shown on Plates B-71, B-72 and B-73. It should be noted that the hoist has been so located on the pier that the wire ropes will contact the skinplate for essentially the full height of the gate. This is done to prevent floating debris from becoming lodged between the gate face and the wire rope and possibly damaging the rope. Also, the input shaft of the driven side parallel shaft speed reducer must be of special design suited for the total torque required to lift the gate. Wire rope hoists are very common for new construction and when rehabilitating or replacing existing spillway operating machinery.

3.1.2.1 Design Capacity. The design capacity for an electric motor driven hoist should be based on the maximum load at normal speed. Loads on the component parts should include the above loads and the applicable friction losses in the reducers bearings, gear trains, and rope. Experience has shown that allowances for friction losses in the hoist components should be liberal. Losses in speed reducers when operating at low speed are greater than those listed in manufacturers literature and are further increased by high viscosity of lubricants in low ambient temperatures. Heaters have been provided in speed reducers where low temperature operation is required. When used, heater elements should be selected with low watt density 1.5-1.8 watt/cm^2 (64-77 watts/in^2) to prevent charring the oil. More recently, synthetic oils with high viscosity index have been found suitable for use in speed reducers operating at low temperature. When synthetic oils are considered, proper seal selection for the speed reducer is essential due to the aggressive nature of these oils. However, the use of synthetic oils reduces maintenance and energy cost associated with heaters.

3.1.2.2 Component Parts. Component parts of wire rope electric hoists are designed for a factor of safety of 5 based on normal loading and, in addition, each part is designed for a unit stress not in excess of 75 percent of the yield point of the material under loads resulting from the maximum torque of the motor selected. Both normal loads and loads resulting from the maximum torque of the motor (usually 280 percent of full load torque) should be considered as equally divided between the two drives of a hoist. Shock, impact, and wear factors are considered negligible and may be disregarded.

3.1.3 Direct Connected Hydraulic Cylinder. This type of machinery usually consists of two hydraulic cylinders, one mounted on each pier and arranged to lift each end of the gate. The cylinders are trunnion type and mounted in cardan rings which are supported by hoist frames cantilevered over the side of the pier. The piston rod is connected to the gate through a spherical bearing. A general arrangement of a direct connected hydraulic cylinder type tainter gate hoist is shown on Plate B-74. Details of the mounting arrangement are shown on Plate B-75. Individual hydraulic power units are usually mounted in rooms at the top of each pier although an arrangement with a single power unit is possible. As much valving as possible is mounted in manifolds connected directly to the cylinder ports. This includes a pilot operated check valve on the rod end port used to hold the gate in a raised position. This arrangement minimizes interconnecting piping and the potential for leakage or failure. Plate B-76 shows a typical hydraulic schematic diagram. See EM 1110-2-2702 for loading conditions associated with direct connected hydraulic cylinder operated tainter gates. Direct connected hydraulic cylinders are gaining popularity for spillway gate operating machinery for new gated spillway construction. Converting an existing wire rope or chain gate operated hoist to hydraulic cylinder will be both difficult and costly due primarily to design modifications to the piers that support the cylinders.

3.1.3.1 Piston Rod. The piston rod is usually connected through a spherical bearing to a lower framing member on the gate necessitating that the gate arms be skewed to the pier rather than parallel to the pier. It is also possible to connect the piston rod directly to the top of the side arm which could then be parallel to the pier.

3.1.3.2 Cylinder Synchronism. The two cylinders are kept in synchronism by the hydraulic controls. Position indicators mounted internal to each cylinder provide a signal, relative to cylinder stroke, to the control system. This system generates an error signal which is used to control a small proportional valve. This valve is used to bleed oil from the rod side of the lead cylinder when raising and from the rod side of the lag cylinder when lowering. A typical schematic diagram with description of components is shown on Plate B-76. For small gates or gates that are infrequently operated and then returned to the sill, such as on flood control spillways, a simpler system utilizing a flow divider may provide sufficient synchronization.

3.1.3.3 Design Capacity. The design capacity of the hydraulic cylinder should be a minimum of 125 percent of the maximum load. This resulting design capacity should be used to establish the system operating pressure, cylinder bore and piston rod diameter. All components of the hoisting system should be designed in accordance with the provisions of UFGS-15010A, Hydraulic Power Systems for Civil Works Structures. Appropriate consideration should be given

to the selection of the fluid to be used in the system in regard to anticipated operating temperature. The spherical bearing used at the gate connection should be constructed of corrosion resisting materials and be of the self lubricating type.

3.1.4 Round Link Chain Hoists. Round link chain hoists presents both pocket wheel and grooved drum lifting mechanisms. These type of hoists have been used primarily to replace existing roller chain hoists.

3.1.4.1 Pocket Wheel. The pocket wheel, shown on Plates B-77 & B-78, is a universally applied lifting mechanism to handle and hold a round link chain to the limit of the chain's breaking strength. A pocket wheel is designed to properly load the chain in tension and bearing without inducing the bending loads predominant in a grooved drum. The wheel may be either a ring forging of alloy steel or a weldment.

3.1.4.1.1 Design Standard. A standard specification for a ring forging is provided below:

Material	ASTM A290, Class K
Tensile strength, minimum	1,170 Mpa (170,000 psi)
Yield strength, minimum	1,000 Mpa (145,000 psi)
Brinnel Hardness range	340 to 400

The standards for the design of a pocket wheel are derived indirectly from the dimensions included in DIN 22252, Part 1 (High-tensile Round-link Steel Chains for Mining; Testing). This standard covers the dimensions and tolerances for chain that is compatible with pocket wheels. Preliminary design calculations for pocket wheels using a specific chain size are necessary in order to determine that the unit size is compatible with any physical space limitations imposed by the gate machinery location. An additional auxiliary item required for a pocket wheel mechanism is a chain locker. The size of a chain locker should be such that it adequately contains the slack length of chain when the gate is in the fully raised position. Chain locker volume should be a minimum of the product of the diameter of the chain in inches squared, times the length of the chain in fathoms, times 0.85. A sample calculation is included in the Appendix C showing various dimensions of chain lockers required for a 14-meter (46-foot) length chain 38 mm (1.5 in.) in diameter.

3.1.4.1.2 Availability. While no manufacturer will have a standard off-the-shelf product that will fit a given application exactly, the technology to build a pocket wheel to a given design criteria is available by many manufacturers. The pocket wheel has been successfully installed at Locks and Dams on the Upper Mississippi and Illinois Rivers.

3.1.4.1.3 Assembly Test. After installation is completed, an assembly lift test should be required as part of the contractor's responsibility for the gate lifting machinery. These tests should include not only a design load test, but an overload test that proves that the maximum specified motor torque will not deform the chain or allow the chain to slip on the pocket wheel.

3.1.4.2 Grooved Drum. Another type of round link chain lifting mechanism is a cylindrical grooved drum. This design includes a cast or fabricated cylinder with a helical groove that is either cast or turned into the surface. The groove is designed to accept every other chain link and must be sized large enough to wind the entire length of chain around the drum in a single row. One advantage of a grooved drum is that it requires no chain locker since it stores the chain on the drum similar to a wire rope drum. The diameter of the grooved drum should not be less than 25 or 30 times the diameter of the bar used for the chain links. For applications where there is no additional room for chain storage, the use of a grooved drum may be indicated. An added advantage of this type of drum is that it is able to accept a deformed link without becoming jammed. The main disadvantage of the grooved drum is the manner in which it loads the chain links. Each link is loaded in both tension and bending. This loading situation puts undue stresses on the links, especially since chain links are not meant to be loaded in bending. A sample stress calculation is included in Appendix C. It shows a 38 mm (1.5 in.) chain being loaded on a 1.0 meter (41.49 in.) diameter drum. The results of the calculation show that, even under a normal tensile load, the chain is loaded at or near its yield point. Chain is typically known by its breaking strength and a proof load is normally specified. Actual stress levels in a chain under loading are determined by an involved analysis dependent on criteria such as chain geometry, hardness, material properties, etc.

3.1.4.3 Round Link Chain. The selection of a chain handling device depends entirely on the type of chain to be used. There are many types of chain commercially available today for various applications of lifting service. The links of the round link chain are not actually round, but have round ends and approximately parallel sides. The calibrated links are designed specifically to be used with a pocket wheel that drives the chain properly, loads each link in tension and bearing, and eliminates the bending stresses in the links that occur when a grooved drum is used. This type of chain is widely applied to both low speed and high speed lifting and is both abrasion and corrosion resistant.

3.1.4.3.1 Material. Round link chain used in chain hoists, shown on Plate B-79, is made from an alloy steel. Although the materials and heat treatment may vary among manufacturers, AISI 8620 is a common material for this chain. This material is heat treated to a tensile strength of approximately 965 Mpa (140,000 psi). The hardness of this chain from different manufacturers may also vary, but a figure of 300 BHN is considered average. The higher hardness of this material provides improved wear qualities over low alloy chain. However, low alloy chain of equal breaking strength has a greater energy absorbing capacity, and, therefore, greater shock load capacity, than high alloy chain.

3.1.4.3.2 Compatibility with Existing Material. The type of chain that may be used for gate hoisting should be compatible with the existing gate and hoist component materials to prevent undue wear and abrasion. Hoisting chains mainly contact the wear bars or wear plates on the surface of the gate. The wear bars on the gates should be sized specifically for the chains that will be installed. Wear bars and plates should be compatible in size and hardness with the lifting chain selected. Galvanic corrosion due to dissimilar metals should also be considered during the design process.

3.1.4.3.3 Tolerances. Manufacturing standards for calibrated round link chain require that each length of chain meet certain tolerances with regard to link size and breaking strength. High alloy hoist chain is manufactured to length and width plus or minus 0.51 to 0.76 mm (.02 to .03 in.) These tolerances are an international standard so that all chain, regardless of manufacturer, will be suitable for the intended use. The DIN standards for strength testing of this chain are very rigorous and include tensile, bending, and shock tests.

3.1.4.3.4 Abrasion. For chain to be suitable for dam gate lifting service, it must be resistant to abrasion caused by silt trapped in the submerged links. Chain used for dam gate lifting will probably never be washed or cleaned since it would be difficult and impractical to do so. High alloy conveyor chain must be specifically to be very abrasion resistant.

3.1.4.3.5 Shock. To resist shock loads, a material must be strong and be able to absorb the energy imparted to it by the shock load. When carbon steel is alloyed and heat treated to increase strength, its energy absorbing capacity doesn't increase proportionately. Thus, for equal breaking strength, lower alloy material will normally be more resistant to shock loading than higher alloy material. Round link alloy chain is specifically tested for shock loads by the manufacturer.

3.1.4.3.6 Distortion. To be compatible with a hoist chain pocket wheel, the chain must be capable of being loaded without being significantly distorted. If the chain were to become distorted, which usually amounts to the link becoming longer and narrower, the links would no longer fit the lifting device pockets. Round link chain resists distortion since the sides of the link are designed to remain parallel. If these links distort, they tend to elongate, but they can only do so after they have exceeded the elastic limit of the material. The design criteria for lifting chain requires that the minimum breaking strength of the chain shall be no less than 5 times the design load, and that the lifting machinery shall in no case impart to the chain a load that will exceed 75 percent of the yield strength of the steel in the chain. When a chain is selected within these design limits, link distortion will not be a factor.

3.1.4.3.7 Corrosion. The type of chain discussed in this chapter of the EM should normally be protected against corrosion. Hoist chain is available with a variety of special corrosion coatings such as special paints or hot galvanizing. It should be noted that hot galvanizing should not be used for chain in this type of application unless the reduced strength due to reheating is taken into account. While selecting a corrosion coating is not part of the scope of this manual, it should be noted that the existing chains on the prototype pocket wheels at Lock and Dam 20 on the Mississippi River have worked very well for a period simulating 50 years of operation, with no corrosion coating at all.

3.1.4.3.8 Replacement. Replacement of round link chain described in this manual should not be a problem in the foreseeable future. This type of chain is widely used in the U.S. and in foreign countries.

3.1.4.3.9 Chain Costs. The actual competitive costs for chain can be accurately determined

only after bidding. However, for comparison purposes and cost estimates, cost figures for chain in the round link hoist category can be obtained from various manufacturers. Chains should meet the strength and durability requirements for gate lifting service at Civil Works Projects. Differences in cost could influence the chain selection criteria in a project similar to the one Lock and Dam 20 (Mississippi River), which required almost one mile of chain to power all the gates.

3.1.5 Engineering Steel Chain.

3.1.5.1 Introduction. In addition to round link chain, engineering steel chain should also be considered as a replacement for existing roller chain. Roller chains (using pins, rollers, and sidebars) have been, for many years, a source of operation, maintenance and environmental problems at gated spillways owned and operated by the Corps. Past roller chain design is difficult to lubricate, causing bearing surfaces to corrode and bind which prevents smooth operation of the chain over the sprocket. As a result, spillway gates could not be operated, chains failed, and gates dropped, creating both a dam safety problem and a safety hazard for operating personnel. The chain design that's described herein has solved the problems associated with past roller chain design for both tainter and roller gates in both the Huntington and Saint Paul Districts. It has been in use by these districts since 1997 with no problems reported. The following topics are presented: material selection, corrosion prevention, first cost, and life cycle cost. An engineering analysis of this type of chain is presented and maintenance issues examined.

3.1.5.2 Terminology. It is important to differentiate how a lifting chain for a tainter gate is different then a bicycle chain beyond the obvious size and strength differences. There are several chain standards and a chain manufacturer's association that classifies various chain types.

The chain industry, chain manufacturers, and American Chain Association (ACA) make a distinction between Roller Chain and Engineering Steel Chain. In general, Roller Chain is used for power transmission between sprockets at moderate to high speeds. The chain speed, sprocket design, and kinematics between the sprocket and chain are crucial. Roller Chain is manufactured per ANSI/ASME B29.1 (see standards paragraph below). The tension members between pins (side plates) are called link plates. This type of chain is generally produced in large quantities. The size and strength ratings are relatively low.

Engineering Steel Chain is intended for a wider variety of applications including materials handling, conveying, and other industrial uses. The Engineering Steel Chain is usually manufactured in smaller quantities, has greater strength, more corrosion resistance, greater shock resistance, and designed to be used in severe environments. The chain is manufactured per several standards including ANSI/ASME B29.10 and B29.15. The side plates are called sidebars. The pin-bushing area is referred to as the chain joint. The sidebars establish the chain pitch (see Figure 3-1).

The ACA defines tension linkage chain as a chain application where the main function is to move a load slowly, intermittently through a short distance, or to hold a load. These types of

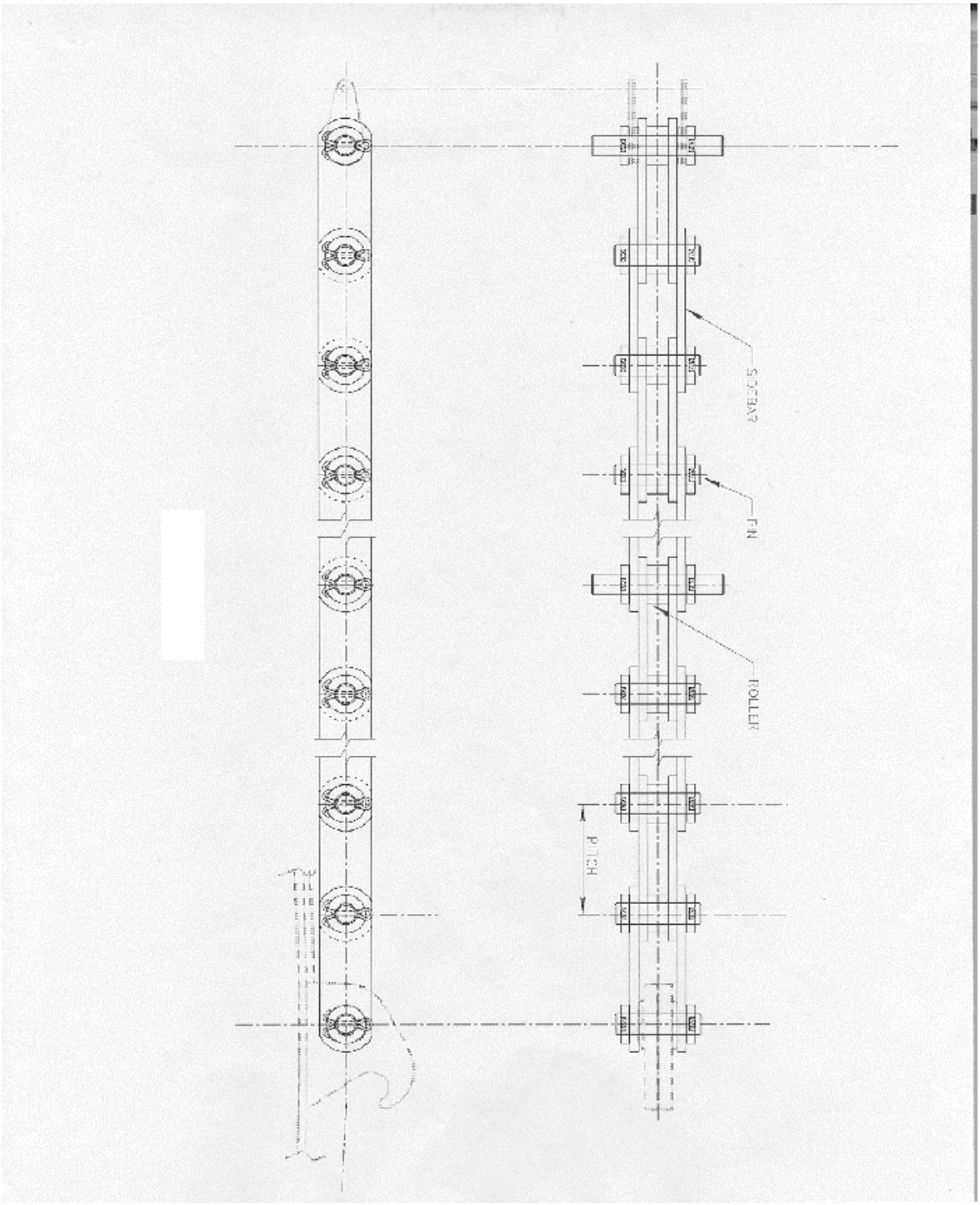

Figure 3-1. Chain Assembly

chains are used for hoisting, supporting counterweights, etc. The function of a tension linkage chain is to transmit a moving force using chain tension hence the nomenclature.

Lifting chain for roller and tainter gates thus falls under the category of a tension linkage, Engineering Steel Chain. The following definitions are provided:

- Pitch is the distance between the centers of adjacent chain joint members or center-to-center distance between adjacent pins,
- Sidebars are tension members connecting the chain joints, and
- Pins connect one link section to another. Pins are the shear members between the inner and outer sidebars.

3.1.5.3 Standards. The American National Standards Institute (ANSI) and American Society of Mechanical Engineers (ASME) both publish standards for chain as stated above. These standards are written in English units although the latest editions of these standards have the metric equivalent (for reference only). In fact, the basic design of the chain in ANSI B29.1 is written in English units. The roller diameter is defined as 5/8 times the pitch. There are manufacturers, however, that make a true metric chain. Also, the European DIN (German) Standards and the International Standards Organization (ISO) categorize metric chain.

Many of the original tainter gate chain designs (from the 1930's) for the Upper Mississippi River projects used offset side bar roller chain as opposed to straight side bar roller chain. The primary benefit of offset side bar type of chain is that the links are all identical. Offset sidebar chain can be used in odd or even number pitches. The primary advantage of using straight sidebar chain is that the chain is easier to manufacture and for a given sidebar plate thickness, the straight sidebars will have more strength. Straight sidebar chain consists of inside and outside links and sections of this chain type must be used in even number of pitches (lengths). This chain can also be constructed without rollers. However, in gate lifting applications, the rollers are necessary for reducing friction as the chain is going over the sprocket.

It should also be noted that the majority of the ANSI/ASME standards concern chain used in power transmission rather then lifting applications. However, this difference is generally irrelevant. The loading on the chain is basically the same and in both applications the chain is going over a sprocket. The biggest difference between power transmission and lifting application is likely to be the speed. In lifting applications, the chain travel will be extremely slow.

ANSI/ASME B29.1M (1993), Precision Power Transmission Roller Chains, Attachments, and Sprockets list a series of standard roller chain. However, this standard only classifies chain up to a pitch of 3.0 inches. ANSI B29.1 assigns standard number designations to chain based on pitch, chain width,
and roller diameter. The chain sizes given in B29.1 are generally inadequate for a majority of tainter gate and roller gate lifting applications. The primary benefit of this standard is that any chain manufactured according to it will fit over any corresponding sprocket manufactured to the standard. The chain of one manufacturer will replace the chain of another manufacturer.

ANSI/ASME B29.10M (1994), Heavy Duty Offset Sidebar Power Transmission Roller Chains and Sprocket Teeth, only standardizes offset sidebar type of chain. This standard is an Engineering Steel Chain standard and includes chain with a pitch up to 7 inches (177.8 mm) and

a minimum ultimate strength of 425,000 pounds (1890 kn).

3.1.5.4 Material Selection. Material selection is likely the single most important feature of the lifting chain design. The type of material used for the chain will impact the strength, corrosion resistance, and overall life of the chain. Proper material selection must be made to insure a 50-year life for the lifting chains.

The lifting chain will at a minimum be subjected to rain, snow, etc. For projects that maintain an upper pool, the portion of the chain that connects to the gate, however, will be submerged in the river. This will subject the chain to silt and debris. Because the dam gates are rarely moved completely out of the water, the lower section of chain will be submerged for a majority of its service life. This lower portion of chain will also be subjected to sandblasting and paint over spray when the dam gates are being painted.

Recent lifting chain design utilizes aluminum bronze sidebars and stainless steel pins, see Figure 3-2. Both of these materials should provide adequate corrosion protection to allow the chain to last 50 years. Aluminum bronze is manufactured per ASTM B505 and a 62,000 psi (427,586 kPa) minimum yield strength is specified.

Figure 3-2. Typical Chain Installation

The stainless steel pins are manufactured per ASTM A564 Type XM-25 Condition H1050. This stainless steel is equivalent to Type 304 stainless steel for corrosion resistance. The primary disadvantage of using this type of stainless steel is that it was developed by one manufacturer and is not readily available from other manufacturers. Other options for the stainless steel include using ASTM A564 Type 630. This material is very close in properties to XM-25 and is available from more manufacturers. There are some disadvantages of using Type 630 stainless versus XM-25. The Type 630 stainless is more difficult to machine and must be age hardened prior to using. A comparison of the stainless steels is provided below in Table 3-1.

Table 3-1

	ASTM A A564 Type XM-25, H1050	ASTM A564 Type 630, H1025
Min Tensile:	145,000 psi	155,000 psi
Min Yield:	135,000 psi	145,000 psi
BHN:	321	331
BHN is Brinell hardness number		

3.1.5.5 Cost. The cost of the lifting chain will primarily be a function of the materials used. Although carbon steel materials will have the lowest initial cost, it is likely that the underwater portions of the chain will need replacement over 50 years. The stainless steel and aluminum bronze chain design will thus have a lower life cycle cost including maintenance costs. Also, the nickel plating of the pins approaches the cost of a stainless steel pin.

The cost for various combinations of materials has been estimated (per pound of chain). Cost estimating the chain on a per pound basis allows comparison of different designs. The chain length and size becomes irrelevant. All costs have been converted to 2001 dollars. The cost figures include all machining, assembling, and shipping. The following summarizes the chain costs among various supply contracts:

- All stainless steel chain using ASTM A564 Type XM-25 (both sidebars and pins) $10 to $11 per pound of chain.
- Steel Sidebars with Nickel Plated Pins and Grease Fittings - $3.3 - $4.8 per pound of chain
- Steel Sidebars and Nickel Plated Pins and Non-Lube Bushing - $8.7 per pound of chain
- Aluminum Bronze Sidebars and Stainless Pins - $6.5 per pound of chain

3.1.5.6 Chain Design. Chain design is based on a 50 year service life. Several design considerations need to be analyzed to insure this 50 year life. Strength and material selection are probably the most important. As discussed above, the material selection will dictate how much

the chain will corrode over 50 years (in particular the lower section of the chain). There are other design considerations that need to be analyzed, however. This includes yield strength, shear

strength, fatigue strength, bearing stress at the chain joint, bearing clearance at the chain joint, and shock loading.

The ANSI/ASME standards define minimum ultimate strength (MUS) as the tensile load in pounds (or kilonewtons) at which a chain, in the condition at the time it left the factory, may break in a single load application. The yield strength of the chain should be 40% to 60% of the MUS. The chain also should be designed for shock loading. An example of this would be when a gate falls against a slack chain. The ACA Design and Applications Handbook lists a service factor of 1.4 to 1.7 for heavy shock loading. Several of the lock sites have broken chain in the past when a gate has been dropped against a slack chain or when slack chain was generated to provide additional momentum for breaking a frozen gate loose. Even though these practices are not recommended by the designers, the lifting chain will likely be subjected to these conditions over its service life.

Since the lifting speed of dam gates is very slow, the chain/sprocket design is not paramount. The main factor for the chain is the ability to hoist and hold the load from the dam gates and perform under all service conditions.

The interface between the pin and sidebar of the chain (or the chain joint) will be the highest stress area of the chain. A chain failure will result from either a sidebar or pin failure in this area. At the chain joint area, the sidebar will be in tension and shear. Corrosion in the chain joint area may cause the pin not to rotate as the chain is going over the sprocket causing damage to the gate hoist machinery. The bearing clearance necessary in the chain joint will depend on the materials used for the sidebar and pin. A minimum clearance of .005" is used in the current chain design. This value should be doubled or tripled if steel sidebars and pins are being used.

The pin undergoes bending stress in the center between sidebars and also shear stress at the chain joint. Both of these values need to be calculated.

An appropriate design standard is necessary to adequately design the chain joint area and determine a bearing stress. The American Association of State Highway & Transportation Officials (AASHTO) standard for bridges can be used for this purpose. In particular, the design constraints for pins, rollers, and rockers for bridges can be utilized. This standard makes a distinction between bearing stress on pins subject to rotation versus non-rotating pins. The chain joint should be classified as a rotating joint as opposed to a non-rotating joint. The standard also sets an allowable shear stress (Fv) of 40% of yield for the pin.

The AASHTO standard also helps determine whether a bushing or bearing is required. The AASHTO Specification for Highway Bridges, 15th Edition, 1992, Section 10 (Structural Steel), Part C (Allowable Stress Design), Table 10.32.1A permits an allowable bearing stress of 80% of yield for pins not subject to rotation. This specification allows a bearing stress of 40% of yield for pins subject to rotation. The standard states the effective bearing area of a pin shall be the diameter multiplied by the thickness of material on which it bears (the sidebar for instance).

The AASHTO standard for pins, rollers, and rockers is meant to eliminate galling in the pin/rocker area (ie. chain joint). The AASHTO standard implies that stress values below 40% of yield strength will avoid galling and that a bushing or bearing is not required. The standard only recognizes structural steel and alloy steel materials, however. Galling results from metal to metal contact. When a cohesive force between two metals exceeds the strength of either metal, adhesion or cold welding will occur. Under high stresses, cold welding will occur more rapidly and over a wider area. For instance, galling will likely occur when the chain is loaded up to and beyond yield limits. Galling is also a particular concern when stainless steels are mated with other stainless steels. Thus, if no bearing or bushing is used with an all stainless steel chain (sidebar and pin), the 40% of yield value may need to be lowered. The surface finish at the chain joint will also affect the rate of galling. The smoother the surface finish, the less likely galling will take place.

Chain designs using aluminum bronze sidebars and stainless steel pins will act like a bushing/pin interface. These two metals have good compatibility in terms of their bearing properties. These materials also have a fairly low corrosion potential (from dissimilar metal corrosion or galvanic corrosion). The lower the potential difference, the less likely galvanic corrosion will occur. The Metals Handbook, Volume 1, Properties and Selection of Metals, 8th Edition, American Society for Metals, lists a potential difference of +79 millivolts between aluminum bronze and 304 stainless steel in dilute sea water. This compares to +904 millivolts between zinc and copper.

Fatigue strength of the chain should be considered in the chain design even though the chain speed is slow. At many Corps projects, it should be noted, however, that fatigue strength is not likely to be the limiting factor in the chain design. This needs to be checked for each specific application. For Saint Paul District, it was assumed that the gates will be raised and lowered 3 times per week, then over a 50 year period, the chains will be cycled nearly 10,000 times. As each chain link section goes over the sprocket, it will be subjected to maximum tension. The link section will then be slack as it goes over the sprocket and is coiled up in the chain rack.

3.1.5.7 Maintainability. A primary goal of the chain design was to either eliminate or reduce the amount of maintenance necessary on the gate lifting chains. For projects that normally maintains an upper pool, a reasonable assumption can be made that it takes a crew of 4 people one week to bulkhead a single gate, temporarily support the dam gate, and grease the lifting chains (2 per tainter gate). Thus, switching to a non-lubricated chain offers a significant cost savings over 50 years.

When compared to replacing existing chain with wire rope, chain replacement offers several advantages. First, the existing gate lifting machinery could be reused. Also, using chain instead of wire rope requires less maintenance over 50 years. Wire rope needs to be lubricated on a regular basis. Any damaged part of chain can be replaced while wire rope must be completely replaced.

Many original (1930's design) lifting chains for the tainter gates were lubricated in a number of

different ways. All of these lubrication methods allowed oil and grease into the water. Some of the lock sites lubricated the chain with 30W motor oil. Other sites used diesel fuel or waste oil. None of these methods allowed any lubricant into the chain joint since the bearing clearances were too tight.

Grease lubrication systems worked well initially, but there is a number of them now that will not accept grease. This system offered no advantages from a maintenance standpoint, and excess grease still ends up in the river.

The chain design presented herein use no bearing or bushing in the chain joint. The chain joint is designed as a bushing, however, since the sidebars are made of aluminum bronze and the pins are made of stainless steel. This design will eliminate the need for greasing of the chains.

3.1.5.8 Zebra Mussels. Zebra mussels have become more prevalent in the Upper Mississippi River system within the last several years. Zebra mussels attach themselves to submerged gates, intake valves, grating, concrete, etc. At a minimum, the submerged portion of the gate lifting chain needs to be designed to reduce or eliminate zebra mussel attachment. Material selection needs to be made to reduce or eliminate zebra mussels from attaching to the chain.

Testing and research by the U.S. Army Corps Of Engineers Waterways Experiment Station (WES) and the Construction Engineering Research Laboratory (USACERL) have shown that zinc and copper are toxic to zebra mussels.

The latest design of the chains, as stated above, use aluminum bronze sidebars and rollers. The specific alloy is UNS No. C95500 which is composed of 78% copper, and field inspections indicate little zebra mussel attachment to the lifting chains. Some zebra mussels were attached to the stainless steel collars and pins but no mussels were attached to the aluminum bronze sidebars.

3.1.6 General Design Considerations.

3.1.6.1 Hoist Arrangement. A hoist arrangement with one lifting point for each side of the gate is preferred over a single, center lift type hoist. This arrangement is essential for maintaining a minimum clearance between the lifting points on the gate when fully raised, and the service bridge structural steel. A typical hoist arrangement for the round link chain consists of a cross shaft, and centrally located motor/gear-box units with single reduction gearing at each end. This form of arrangement is generally considered to be the most economical from a viewpoint of space utilization and accessibility for maintenance. Because the gate is lifted from each end, it is possible that one lifting point could be subjected to a greater proportion of the maximum torque available in the drive train, due to becoming frozen-in or otherwise stuck. The motor design principally governs the maximum value of this stall or breakdown torque, which has an upper limit of 280 percent of the normal rated torque. A summary of manufacturers service factors for cataloged parts of a hoist arrangement is provided in Appendix C, for guidance purposes only.

3.1.6.2 Design Criteria. The maximum load on the hoist usually occurs at the beginning of the hoisting cycle but it may occur at other points in the cycle, depending upon the position of the center of gravity of the gate with respect to the horizontal centerline of the trunnion. The total load at the hoist or hydraulic cylinder is the sum of the gate torques causing closure plus the gate torques resisting closure divided by the perpendicular distance from the centerline of the chain, rope or cylinder to the centerline of the gate trunnion. The gate torques causing closure are composed of:

- Weight of gate times the distance from trunnion to center of gravity.
- Weight of any silt or ice load times its effective moment arm.
- Loads due to fluctuating tail water from WES Model Test Data.

The gate torques resisting closure are composed of:

- Side seal friction (coefficient of friction of 0.5) times its effective moment arm.
- Trunnion friction (coefficient of friction of 0.3) times the radius of the trunnion bearing.

Computer programs aid in optimizing the capacity of either type hoist, with respect to hoist location, pier height and length, cylinder bore, pressure and stroke, including the magnitude and direction of the trunnion reaction. For the wire rope type hoist, the effect of the rope leaving the drum on the upstream or downstream side and its effect on bearing reactions can also be considered. Electrical equipment should be designed and selected in accordance with the provisions of UFGS 16905A. Tainter gate design loads are discussed in EM 1110-2-2702. Sample stress, sizing and power computations are provided in the Appendix C.

3.1.6.2.1 Hoisting Speed. A hoisting speed of about 5 mm per second (1 foot per minute) has been found satisfactory for most installations. However, the hoist speed should be varied so that the horsepower requirement will approximately match a standard motor rating. The designer should always discuss the gate raising and lowering speeds with the Hydraulics and Hydrology engineers.

3.1.6.2 Speed Reduction. For the main gear reduction, helical or herringbone type speed reducers are more efficient and generally less expensive than double reduction worm gear reducers, but if the latter type is used, ratios offering the best efficiency should be selected since the self-locking feature of units with small helix angles and low efficiencies serve no useful purpose on these hoists. Ratings of the reducers are based on the rated horsepower of the motor or on full load torque, depending on the type of reducer and the operating speed, reduced by suitable allowance for friction losses. Typical service factors for speed reducers are provided in Appendix C.

3.1.6.2.3 Brakes. The electric brake should be installed on the input shaft of the first speed reducer opposite the driving motor. This arrangement permits either the brake or motor to be serviced or replaced without disturbing the other.

3.2 Vertical Lift Gate (Spillways).

3.2.1 General. This sub-chapter presents two different types of operating systems for vertical lift gates, a hydraulic cylinder that is directly connected to the gate, and a screw stem hoist. In addition to these hoists, the hoist arrangement presented in Chapter 2 for the vertical lift gate for lock application can also be used for vertical lift gate for spillway application.

3.2.2 Direct Connected Hydraulic Cylinder.

3.2.2.1 General. Simple or telescoping hydraulic cylinders can be direct coupled to vertical lift gates. The choice depends on the extended and contracted lengths required for the application. The cylinder is hung from a stationary bracket and the gate is hung from the cylinder rod. The gate is raised when the cylinder is put in tension and it is lowered when the cylinder assembly is put in compression. Fluid can be supplied to the cylinder in a number of ways. The simplest system would provide one variable displacement type pump for each cylinder. With this type system the gate speed and position can be controlled by the pump's discharge or by valving. A constant displacement pump can be used for one or more cylinders in conjunction with an accumulator tank. With this type system the gate(s) speed and position must be controlled with valving. Backup power systems not generally recommended because of the high cost. Note however that an auxiliary lifting system such as a gantry crane must be provided for removal and/or replacement of the cylinders and their attachments. Note that it is assumed that each gate will be operated by one cylinder. If the installation requires a cylinder at each end of the gate, information in Paragraph 3.1 on cylinder synchronism for direct connected hydraulic cylinder gates should be reviewed. The choice of either one or two connection points depends on the gate height to width ratio and needs to coordinated with the gate designer.

3.2.2.2 Advantages. Direct connected hydraulic cylinder actuation offers several advantages compared to actuation by rope or chains. The most significant advantages are for closure during flow conditions. An hydraulic cylinder can push a gate closed and can do so at a controlled speed. Rollers are not needed for hydraulic cylinder actuated gates. Any tendency for a gate to stick will not have much effect on gate speed. A stick/slip situation will not arise. Hydraulic cylinder actuation will not allow a gate to jump under flow at the moment of final closure as may result if ropes or chains are used. Also, hydraulic cylinder actuation can provide better indication for gate travel. In addition to position, pressure which is proportional to force, can be monitored. This could indicate gate friction problems or if normal equipment capacity is being exceeded. Hydraulic cylinders and their required attachments are compact for fitting in new installations or retro-fitting in existing installations.

3.2.2.3 Disadvantages. The pumps and appurtenant equipment are fragile. However, they can often be located remotely, where they will be in a protected environment and will not be in the way of other equipment. Also, it is critical that the surfaces of the cylinder rods are protected from being bent, scratched, dented or nicked, and that they be of a material which is resistant to corrosion because of the environment in which they are located. The potential for a fluid leak into the waterway is always present. See Chapter 5 for design methods and materials

that can minimize the disadvantages.

3.2.2.4 Design Criteria. The following information is from experience gained from powerhouse intake and draft tube gates and is being applied to a spillway structure. In addition to the weight of the gate and gate friction, design calculations for loads for hydraulic cylinder actuated gates must consider the force of gravity on the oil in the hydraulic lines and cylinder, the hydraulic friction of the oil passing through the piping, and the static and dynamic friction of the seals and scrapers on the cylinder rod. When hydraulic cylinder actuation is installed for the capability of lowering the gate during full flow condition, the design calculations should consider the downward force on the gate caused by water flowing under the gate at near closed positions.

3.2.2.2.1 Component Ratings. The hydraulic system components should be rated for at least 100 percent of the pressure of the system will see at normal maximum load, and the cylinder assembly components and attachments should be stressed to no more than 20 percent of yield strength.

3.2.2.2.2 Method of Attachment. Hydraulic cylinder assemblies should be attached to the gate and structure in such a manner as to allow free rotation of the assembly if not attached at both ends, and be designed to resist buckling without relying on the stiffness of the attachments to either the gate or the structure.

3.2.2.3 Control. The simplest control method would be for a system with one variable displacement type pump used for operation of one cylinder. The gate's speed and position could in theory be controlled by a variable discharge pump. However, in actuality valving would probably be required. The controls for the valve and pump would normally be through a solid state programmable controller.

3.2.2.3.1 Control With Constant Displacement Pumps. Controls would necessarily be more complicated where one or more constant displacement pumps are used for operation of one or more cylinders. For this type system, an accumulator tank is usually provided to reduce the cycling of the pump(s). Gate speed and position are usually controlled by valving, again through a solid state programmable controller. Additional controls are required to initiate pump starting and shutoff. It is generally best to award a design/build contract for the entire system, including the controls, to insure that the controls are suitable for the pumps, valves, and cylinders.

3.2.2.3.2 Location of Controls. Gate controls should be located in the control room and at the gate bay piers at the service bridge level. In the case of an unmanned project, closure should be from a manned location. It may be wise to add an interlock feature for gate opening. On such a system the gate opening could only be actuated from the cylinder support area. This arrangement could be used for system maintenance and repair.

3.2.2.3.3 Indication. Gate position indication for hydraulic cylinder actuated gates is normally provided by a selsyn type instrument which can be read on digital displays, locally, remotely, or both. Cylinder pressure should also be monitored. This is recommended as

pressure is proportional to the force required to move the gate, and may indicate problems such as increased friction. Limit switches are usually provided to activate control valves at the end of the cylinder stroke. Pump shutoff or start-up is normally automatically actuated when the system pressure exceeds or drops below set pressure levels.

3.2.3 Screw Stem Hoist

3.2.3.1 General Description. Screw stem hoists typically used at Corps projects are for sluice gates, backflow control gates at large pumping stations and for vertical lift gates at low to moderate heads. The hoists are pedestal mounted, use an Acme-type stem and can be hand crank, electric motor or hydraulic cylinder operated. One hoist, located at the center of the gate, or tandem hoists can be used. Tandem hoists are used when the gate width to height ratio exceeds 4:1. For purposes of this document only tandem electric motor-operated hoists for vertical lift gates will be presented. The tandem hoist is arranged with a screw stem unit connected to each end of the gate and a centrally located dual output motor operated drive with gear reduction and torque limiting capability. The dual output reduction gear is connected to the two screw stem units through driving shafts. A typical arrangement is shown on Plate B-80

3.2.3.2 Design Considerations.

3.2.3.2.1 Hoist Sizing. The hoist size is determined by the operating thrust required to open the gate under full operating head. The operating thrust consists of water load, and the weight of the gate and stem. Specifically, thrust due to water load is determined by the head and the coefficient of rolling and sliding friction of the gate in its slot. Screw stem hoists and electric-motor operators are standard manufactured units. The design/selection guidance provided by manufacturers should be followed.

3.2.3.2. 2 Stem Sizing. The stem is sized to take into consideration corrosion, tension loads during gate raise and buckling which becomes critical during closing. The stem diameter is determined by the material used and the different vertical loads in the system along with the output of the floorstand and the unsupported length of the stem. The operating thrust of the gate does not directly control the size of the stem. The column effect of the unsupported length of the stem during closing is an important design consideration. The vertical loads include the weight of the gate and the frictional loads of the rollers and the rubber seals. The gate buoyancy is typically neglected in the calculations to keep them more conservative. Stainless steel is the most common material for stems. It is corrosion resistant and has higher strength than bronze. Operating stems can also be bronze or cold rolled steel. A stainless steel stem should be used in a corrosive environment.

3.2.3.2. 3 Stem Screw Protection. Stem screws have a metal pipe or a plastic tube to preclude water from infiltrating into the operating mechanism and to protect the stem screw as it protrudes above the operating stand when the gate is in the fully open position. However, when the stem screw travels downward closing the gate it does not have protection similar to the one aforementioned. An expandable stem boot is recommended to keep bird droppings and airborne

debris from attaching to the grease-covered stem. The boot should be suitable for weather and UV exposure, and be resistant to the effects of the stem lubricant.

3.2.3.3 Safety Devices. Safety control devices for an electric motor-operated device include both limit and torque switches. These switches are located in the motor-operated drive unit. Limit switches will stop operation of the screw stem operating mechanism at the fully closed and fully open positions of the gate. The torque switch will stop operation of the hoist unit if an obstruction blocks the gate during closing. Stem screws move at a low speed creating a high torque. A defective limit switch or torque switch could cause serious damage to the operating platform. When the torque or limit switch malfunction during gate closure the uplift force created could be as high as the force generated by the stall torque of the motor. Operating platforms are not normally designed for this condition. The result could be an uplifted operating platform or a buckled stem. The platform should be designed to preclude damage in case of switch failure.

3.3 Wicket Gate.

3.3.1 General Description. A wicket gate can be used for many different applications. For this manual the application will be restricted to those used to create a dam. A Wicket Gate or Wicket, as shown in Plates B-81 and B-82, is a structural framed member which is connected to the sill of the dam and is raised or lowered by mechanical means. The general shape of a wicket is a flat sheet or skin plate with structural reinforcing. Curved wickets have also been designed but model studies have indicated lower pressure areas under the wickets can cause problems when operating the gates. Wickets are designed to be raised and set at a fixed angle inclined against flow. Factors which contribute to the angle of the wickets are the length of the wicket, the stability of the wicket, the head the wicket must restrain and other factors. A wicket can be made of may different structural components depending upon its application. A wicket gate dam is a dam which is used to create a pool by raising a series of wickets to restrict flow in a river. When the wickets are not required to sustain pool they can be lowered to the bottom of the river allowing navigation traffic to pass over the dam without damage to the gates. Three different types of wickets are described and detailed in this manual, each having its own set of advantages and disadvantages. As of this document's publishing date, the Corps has only used hydraulic cylinder operated wicket gates on the Olmstead prototype test facility. Test results were published in a paper presented at the 1998 Heartland Technology Transfer Conference, titled Results of the Olmstead Prototype Hydraulic Operated Wicket Dam.

- Manual Operated Wicket
- Retractable Hydraulic Cylinder Wicket
- Direct Connected Hydraulic Cylinder Wicket

3.3.1.1 Manual Operated Wicket. The manual operated wicket, Plate B-81, is comprised of five basic components: the base frame, wicket, horse frame, prop, and hurter. A sixth component is the piece of equipment which is used to raise or lower the wicket. Depending upon the size and location of the wicket dam, various mechanical operating equipment can be used to operate

the wickets.

3.3.1.1.1 Raising. The basic principle of a manual operated wicket is a boat or some type of machine is maneuvered over the wicket and used to raise or lower the gate. The wicket uses a frame to assist in the lifting operation of the gate. The frame is commonly called a horse and is made of structural steel and connected to the sill on one end and to the mid-section of the wicket on the other. Traditionally the manual operated wickets have been raised by connecting the lifting mechanism on the upstream end of the wicket. The wicket is lifted off the sill from the upstream end and pivots about the horse connection. The horse rotates forward as the wicket raises. Current assists in the lifting operation by flowing under the gate as it raises and rotates about the horse frame. A prop is connected to the downstream side of the wicket and follows a track in the hurter located on the sill of the dam. When the horse has reached a designated angle with the sill the prop is designed to fall into a notch in the hurter. The lifting mechanism to the wicket is released and current holds the wicket at an incline. The wicket must be rotated about the horse connection to create the dam. Traditionally a device is used to push the upstream end of the wicket down until current overcomes the wickets center of gravity and forces it to come in contact with the sill. Once the wicket has rotated, its in its permanent raised position and the gate is set. The rotation point on the downstream side of the wicket is positioned so the combined forces below the rotation point is greater then those above the point, including those of ice loading. This prevents the wickets form flipping over unexpectedly.

3.3.1.1.2 Lowering. To lower a manual wicket the downstream connection point is used. The wicket is rotated forward against flow beyond a fixed angle which releases the prop from the notch in the hurter. Once the prop is clear of the notch, the wicket is allowed to fall by gravity to the sill. It is important to have some downstream pool to cushion the impact the falling wicket. The hurter is designed to realign the prop for the next lifting operation of the wicket.

3.3.1.2 Retractable Hydraulic Cylinder Wicket. The retractable hydraulic cylinder wicket, Plate B-82, uses the same principles as the manual wicket with the following modifications: A hydraulic power unit is used with hydraulic cylinders to operate the gate. The hydraulic power unit can be located on shore above flood stage or in a gallery beneath the wicket depending upon the size of the dam being built. The wicket is connected directly to the sill on the upstream end and does not use a horse frame.

3.3.1.2.1 Raising. The wicket is raised into position by rotating it from downstream to upstream about the hinge of the gate. The retractable design comprised of two cylinders, one for raising and lowering the wicket and one for aligning the raising and lowering cylinder. The hydraulic cylinders are mounted under the wicket. The lifting cylinders piston rod is mounted with a cup which engages a ball mounted on the downstream side of the wicket. The wicket is raised by extending the lifting cylinder which engages the ball and rotates the wicket to a fixed angle where a prop engages a notch in the hurter in the same manor as the manual operated wicket design. Once the prop is set in the notch, the combination of current and gravity of the inclined wicket keep the prop securely fixed in the hurter. The piston rod is retracted to remove it from potential damage caused by debris.

3.3.1.2.2 Lowering. To lower the wicket a second smaller alignment cylinder is used to align the larger lifting cylinder to the proper angle to contact the cup with the ball and the gate. The piston rod rotates the wicket forward until the prop clears the notch in the hurter and the flow of fluid out of the cylinder controls the speed at which the wicket lowers.

3.3.1.3 Direct Connected Hydraulic Cylinder Wicket. The direct connected cylinder design, Plate B-82, is very basic. One cylinder is directly connected to the backside of the wicket. The connection is made at the same location the prop is connected to in the retractable cylinder design. To raise the gate the cylinder is pressurized and the piston rod extends rotating the wicket to 65-degree. The hydraulic valves hold the wicket in the raised position until the wicket is lowered.

3.3.2 Design Criteria.

3.3.2.1 Wickets. Wicket gates are considered a type A hydraulic steel structure per EM 1110-2-2105. Design loadings were applied for allowable stress design in accordance with EM 1110-2-2105.

3.3.2.2 Mechanical Components. Pins, tie downs, etc., are to be designed for the maximum loads or forces applies to them with a minimum safety factor of five based on the ultimate tensile strength of the material involved. In addition, each component should be designed for a unit stress not to exceed 75 percent of the yield strength of the material.

3.3.2.3 Bearings. All bearings associated with a wicket dam are to be self lubricating type and are to be designed not to exceed a maximum load of 55 Mpa (8,000 psi)or the manufacturers recommendations. Bearings should have a finish of 16 micro inch or better. A minimum of 1:1 ratio of length to width should be used. Rotating Pins which operate with bearings should have a finish of 16 micro inch or better and should be made of stainless steel. Formula for determining bearing size:

$$\text{Maximum Load} = \frac{\text{Maximum Applied Load}}{(\text{Shaft Dia.})(\text{length of Bearing})}$$

3.3.2.4 Hydraulic Cylinder and Piston Rod. The hydraulic cylinder is to be designed for extreme operating conditions, loads which operate up to the maximum drought condition. The cylinders are to be designed to operate the wicket against a ice load of 7,500 kg/meter (5000 lbs/linear foot) applied at the top of the wicket. Piston rods are to be sized with a factor of safety of at least 2.5 on the maximum load imposed on the rod and the critical buckling load. Critical buckling loads should be designed using Johnson or Euler equations. Piston rods should have a finish of 8 micro inch or better.

3.3.2.5 Model Test. Testing results and design loads which have been collected at WES and the Olmsted Prototype Hydraulic Operated Wicket Test Facility indicate the following.

3.3.2.5.1 Maximum Load. When raising a wicket the maximum lifting load on the components occurs with three wickets down and raising the middle wicket. The cylinder raising and lowering loads which have been collected at the Olmsted Prototype test facility for a steel wicket with the dimensions 2.8 meters wide by 7.8 meters long (2.2 feet wide by 25.5 feet long) are shown in Table 3-2.

Table 3-2

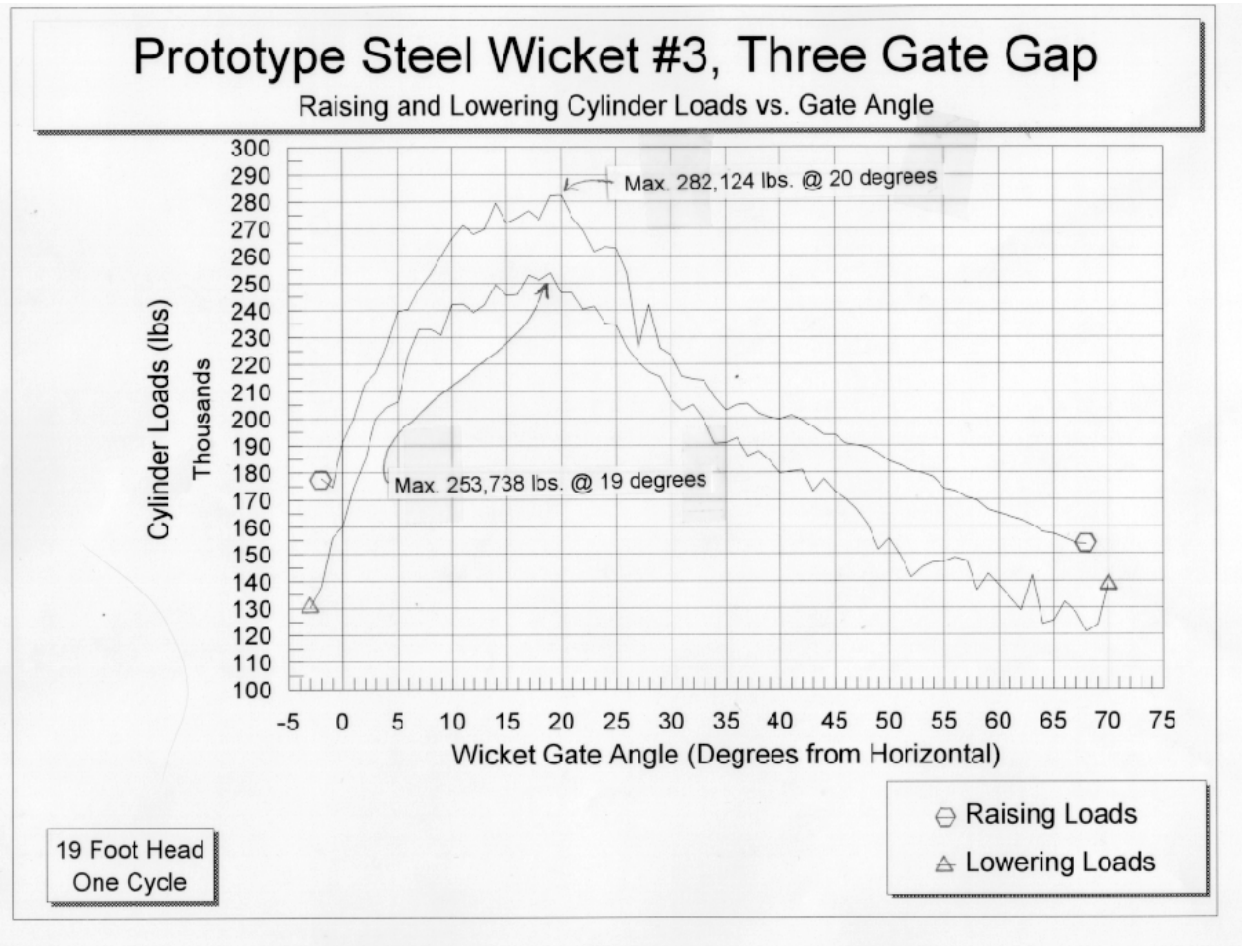

3.3.2.5.2 Hurter Design. When designing a wicket dam which uses a hurter and prop, design the hurter so the side return guide is located on the side of the hurter which is the normal direction which will be used when lowering the dam. Example if the wicket dam is designed to be lowered from right to left looking downstream then the hurter return rail should be located on the left looking down stream. The reason for this is to prevent current from forcing the prop to the side rail and not allowing it to transition through the hurter.

3.3.3 Controls.

3.3.3.1 Manual Operation. The manual operated wicket is controlled by the machine which is used to hook and raise or lower the gate. To prevent damage to the components the machine should not be allowed the raise a wicket in more than 10 seconds.

3.3.3.2 Retractable Hydraulic Cylinder. The retractable hydraulic cylinder control system should be designed to have a maximum raising time of a wicket of approximately 12 minutes. The maximum time to retract or extend the lifting cylinder piston rod under no load should be 3 minutes. The maximum lowering time of a wicket should be 3 minutes. The minimum time to extend or retract the alignment cylinder piston rod wall be 10 seconds. A series of wickets are to be operated off one power unit.

3.3.3.3 Direct Connected Hydraulic Cylinder. The direct connected hydraulic cylinder control system should be designed to have a maximum raising time of a wicket of approximately 12 minutes. The maximum lowering time of a wicket should be 3 minutes.

3.4 Hinged Crest Gate.

3.4.1 General Description. Hinged crest gates are mounted (hinged) at the crest (invert) of the spillway. There are many ways to operate a hinged crest gate but they all lower to open and raise to close. This manual will provide information about the torque tube and hydraulic cylinder type of support and operating system. Details of this type of gate and operating system, used at the Montgomery Point Lock and Dam, is provided in Plates B-83 and B-84. Hinged crest gates, similar to wicket gates, require no intermediate piers and therefore provide no physical restriction to river navigation when the gates are in the down position. Also when lowered, the gates can be designed to conform to the shape of the spillway. Other unique features include the absence of operating machinery exposed to river flow and debris damage and overtopping flows can occur with minimal vibration.

3.4.2 Design Considerations. The height and width of the gates are restricted because of the size of the torque tube required for larger gates. The hoisting mechanism, in addition to raising and lowering the gate, must be able to hold the gate at the desired raised position. A dogging device should be provided to hold the gate in the lowered position during major maintenance, repair or replacement of the operating machinery. The gate operating machinery should be designed to withstand the normal 3-dimensional loading imparted from the gate into the cylinder/cardan frame assembly as well as the much larger barge impact loading. A separate pressure relief system should be incorporated in the hydraulic system to protect the gate and machinery from barge impacts. Speed and ease of maintenance are primary considerations for the gate assembly. A barge mounted crane must be used to remove or replace the gate which is the largest and heaviest member of the system.

3.4.3 System Components. The main components of a hydraulic cylinder operated torque tube gate are the support structure, cardan assembly, hydraulic cylinder assembly, operating arm

assembly, gate drive shaft, and the torque tube gate.

3.4.3.1 Support Structure. The support structure includes the support for the gate and the support for the hydraulic cylinder assembly. The torque tube gate assembly is supported on bearings at intervals along its length. The bearings are either self-lubricating or grease lubricated, however self-lubricated is preferred. Information about self-lubricated bearings is provided in CERL Technical Report 99/104, Greaseless Bushings for Hydropower Applications: Program, Testing, and Results. The bearings are supported in saddles that are anchored to embedded structural elements. The hydraulic cylinder is supported by the cardan assembly. The cardan assembly is supported by a fabricated steel weldment that is bolted to the top of the embedded section to facilitate installation and removal of the cylinder.

3.4.3.2 Cardan Assembly. The cardan assembly provides support and minimize eccentric loading by allowing the cylinder to freely rotate in any direction as required for gate operation. The cylinder trunnion is mounted vertically in the cardan ring to allow the cylinder to rotate horizontally from side to side. The cardan ring is pinned horizontally to the support structure to allow the cylinder to rotate vertically. The bearings of the cardan assembly are self lubricating bronze with thrust flanges. The cardan frame is constructed from steel plate.

3.4.3.3 Hydraulic Cylinder Assembly. The main components of the hydraulic cylinder assembly are the cylinder tube, piston rod and trunnion. The cylinder tube is normally fabricated from one piece AISI 4340 steel and is fitted with a one piece ASTM A36 steel trunnion. The trunnion pins are fabricated with stainless steel wearing surfaces to bear on self-lubricating bushings. An ASTM A668, Type NH steel cylinder rod end is fabricated with a spherical joint rod end for connection to the gate operating arm. The spherical joint is furnished with a self-lubricating bushing. It's important to include a 38 mm (1.5 in.) reserve stroke to the working stroke of the hydraulic cylinder for erection tolerances and other factors like bearing wear. The trunnion is located near the center of the cylinder. The gate operating system is located in an equipment gallery. It's important when designing the gallery to provide an access shaft to allow the cylinder to be lowered into the gallery from the land wall side. The equipment is moved in the gallery on wheeled carts.

3.4.3.4 Operating Arm Assembly. The operating arm assembly connects the hydraulic cylinder to the one piece drive shaft. The assembly is fabricated from two forged steel arms one right hand and the other left hand. The hub end of the arms is split and bolted together around the drive shaft. The hub is permanently welded to the drive shaft after all field adjustments have been made. To increase the strength at this joint, inner and outer rings are welded to both the operating arms and the drive shaft. The other end of the arms form a clevis and connect to the rod end of the operating cylinder via a single corrosion resistant pin. Each assembly is equipped with a dogging device. The dogging device consist of a 90-degree rotating shaft, that is pinned on one end and threaded on the other. The pinned end is connected to a bracket that is anchored to the concrete alcove wall. The threaded end is swung into the dogging slot of the gate operating arm and tightened up. The dogging device will be held in an inoperative position by a latch back pin when not in use.

3.4.3.5 Gate Drive Shaft. Both ends of the drive shaft extend through the alcove cover and connect to the torque tube. The drive shaft is supported by two self lubricating bearings at both alcove penetrations. Leakage past the bearings is prevented by two split rings seals on the waterside and by four layers of split chevron packing on the inside. The middle of the drive shaft connects to the operating arm assembly. The drive shaft is fabricated from a one piece hollow steel forging. Both ends of the shaft are machined with a tapered slot for a wedged connection assembly with the torque tube to ensure a tight fit and ease of assembly and disassembly.

3.4.3.6 Torque Tube Gate. The torque tube gate is supported by the torque tube bearings one on each side of the alcove cover. The two torque tube portions of each crest gate are fabricated from rolled carbon steel plate. The drive flanges of the gate for connection to the gate drive shaft are machined from steel forgings and are welded to the torque tubes (key vertical when the gate is in the fully lowered position). The free ends of the torque tube are closed watertight with welded steel plate. Stainless steel bearing sleeves are provided at bearing locations.

3.4.3.6.1 Bearings. The torque tube bearings are of the pillow block type. The housing is a horizontal split steel casting with self lubricating bearing with seals to prevent entrance of sand and silt.

3.4.3.6.2 Thrust Loading. The side ways or thrust loading of the hinged crest gate is restrained by a 155-degree stainless steel wear plate anchored to the bottom half of each torque tube bearing housing. The corresponding mating surface is three ultra-high molecular weight polyethylene (UHMWPE) pads mounted on the torque tube.

3.4.3.6.3 Access. The alcove cover provides access for installation and maintenance of the gate operating machinery. It consist of a removable steel top fabricated from a steel weldment, two removable side wall supports fabricated from the steel upper bearing casting with associated weldments, and an embedded portion fabricated from a steel lower bearing casting with associated weldments. The castings provide the bearing support for the drive shaft bearing. Neoprene seals and o-rings are provided at all mating surfaces to prevent leakage.

3.4.4 Gate Control.

3.4.4.1 Operator Stations. The dam gates can be operated from several different operator stations. These systems are normally operated remotely from a personal computer located at the operator's station in a control tower. A redundant local system is also provided in the dam gallery. If all of the electronics fail, manual control is provided near each hydraulic cylinder for individual operation of the gate, when needed.

3.4.4.2 Hydraulic Power. The gate cylinders for multiple gates should be supplied with hydraulic power from at least two main hydraulic power units (HPU) as well as from two separate accumulator HPU's. All HPU's are typically located in a control tower. The main

hydraulic system raises and lowers the dam gates one at a time. A typical operating hydraulic pressure is 13.8 Mpa (2,000 psi). The accumulator system holds the gates in either the fully raised or fully lowered position through separate supply piping to either the bore end or the rod end of the cylinder. The accumulator system is sized such that the accumulator HPU will charge the accumulator approximately once every two weeks due to expected fluid leakage in the hydraulic components.

3.4.5 Gate Operation.

3.4.5.1 Normal. During normal operation, the safety measures have no effect on the gate raise and lower cycle.

3.4.5.2 Gate Drift. For gate drift trouble, an indication signal light and audio alarm should be provided to notify operator of most accumulator or leakage problems. Activation of the main HPU should temporally remedy the situation until the lock personnel can fix the problem.

3.4.5.3 Debris Overload. A signal light and audio alarm should be provided to notify operator of debris build-up. After lowering the gate to flush the debris the hydraulic system should return to normal operation.

3.4.5.4 Impact Release System. A gate impact release system should be provided to prevent damage to the hinged crest gate in the event of an impact from a runaway barge, some other large object or debris loading. The system requires the rapid relief of hydraulic fluid from the cylinder full-bore end to the rod end and an auxiliary reservoir. The auxiliary reservoir has the same capacity as the piston rod volume. The system utilizes only hydraulic pressure for release and no electrical power or signals are required for operation or activation.

3.4.5.4.1 High Pressures. For high pressures the impact release system installed at the Montgomery Point Lock and Dam project uses two logic control valves (one redundant) mounted directly on the full-bore end of the hydraulic cylinder to regulate the rate of hydraulic fluid flow out of the cylinder. These valves open by hydraulic pilot lines when unusually high pressure is generated in the full-bore end of the cylinder by impact. The directional control valve, which supplies pilot pressure for the actuation of the logic control valves, is equipped with a detent to ensure that the directional and logic control valves remain open and the gate continues to lower after the pressure in the cylinder falls below the value generated by the impact. The directional control valve is initially actuated by hydraulic pilot pressure released by relief valves (two relief valves should be provided, one redundant). The directional control valve is provided with an electronic solenoid to reset the valve (the solenoid plays no part in the release) for normal operation of the gate. The reset will be performed by a push-button mounted at the gate local control panel. Once the gate reaches its neutral position (the gate position where the net torque on the gate is zero), the gate will be lowered to the fully lowered position by starting the hydraulic system pump.

3.4.5.4.2 Extreme High Pressures. For even higher pressures spikes the impact release

system could be provided with additional pressure relief valves set at a slightly higher pressure than the impact release trip pressure to protect the cylinder and hydraulic system from extreme high pressure transients (spikes) that may occur during impact. As soon as the pressure fall below the set point these relief valves stop relieving.

3.4.5.4.3 Reset. After an impact release, the electrical solenoid on directional control valve is manually energized from a push-button on the gate control panel to shift the directional and logic control valves back to their normal positions. After impact release the hydraulic fluid in the auxiliary reservoir must be drained into a suitable container and manually returned to the HPU reservoir located in the control tower.

3.5 Submergible Tainter Gate.

3.5.1 General. The machinery used to operate submergible tainter gates usually consists of two equal hoist units of opposite hand design arranged to lift each end of the gate. The hoist units are kept in synchronism by power selsyn motors. Each hoist unit consists of a rope drum, open gear set, speed reducer, magnetic brake, hoist motor, and power selsyn. The drum is mounted on a cantilevered shaft of a size to prevent excessive error in the mesh of the final drive pinion and gear due to shaft deflection. A general arrangement of an electric-motor driven hoist for the tainter gate is shown in Plate B-85.

3.5.2 Design considerations and criteria. The design capacity of the hoist should be based on the maximum load at normal speed which is found to be at the nearly closed or raised position. The hoisting speed should be selected so as to raise the gate from full open to closed in 2 to 3 minutes, varying so as to allow the selection of a motor of standard horsepower and speed. General criteria applicable to the design and selection of various hoist components are presented in Paragraph 5.1. Shock, impact, and wear factors are considered negligible and may be disregarded. Selection criteria for wire rope is contained in EM 1110-2-3200. Drum diameter should not be less than 30 times the rope diameter.

3.5.3 Determination of machinery loads. The maximum dynamic load on the hoist normally occurs near the end of the raising cycle. The maximum holding rope load occurs when the gate is fully raised and the water level is below the upper sill. Detailed information on load requirements is provided later in this chapter and in EM 1110-2-2702. No consideration should be given to rope loads created by the flow of water over a partially opened gate. The rope loads from these conditions are indeterminate and control features are provided to prevent their occurrence. The total load on the rope drum is the sum of the following:

- Deadweight of the gate as applied to a moment arm (W x CG) divided by the perpendicular distance of the rope to the gate trunnion center line.
- Side seal friction (total seal force x 0.05).
- Weight of the ropes can be neglected.
- Trunnion friction.
- The static load of the water head on the unbalanced area on the bottom seal.

- Ice buildup and silt formation should be considered when severe freezing or siltloaded water are factors. Seal heating systems usually minimize these factors.

CHAPTER 4
Control

4.1 Introduction

4.2 Design Considerations
- 4.2.1 Operation
- 4.2.2 Site Characteristics
- 4.2.3 Control Rooms

4.3 Main Control Equipment and Instrumentation
- 4.3.1 Programmable Logic Controllers
- 4.3.2 Industrial Personal Computers
- 4.3.3 Networks
- 4.3.4 Motor Control Centers
- 4.3.5 Software
- 4.3.6 CCTV Systems
- 4.3.7 Auxiliary Equipment

4.4 Safety and Security Considerations
- 4.4.1 Personnel
- 4.4.2 Computer System
- 4.4.3 Communications

4.5 Procurement Considerations
- 4.5.1 Computer Hardware
- 4.5.2 Computer Software
- 4.5.3 Sensors
- 4.5.4 Training
- 4.5.5 Warranties and Service Contracts
- 4.5.6 Testing and Startup
- 4.5.7 Documentation

4.6 Power Supply
- 4.6.1 General
- 4.6.2 Configurations
- 4.6.3 Estimating Station Service Load
- 4.6.4 Transformers
- 4.6.5 Station Service Switchgear
- 4.6.6 Emergency Power
- 4.6.7 Other Considerations

4.7 Onsite Wireless Control
- 4.7.1 General
- 4.7.2 Cart-Mounted Wireless Control
- 4.7.3 Handheld Wireless Control

CHAPTER 4
Control

4.1 Introduction.

This chapter provides general guidelines and considerations to stimulate ideas within designers when developing a computerized control system for a lock and dam project. It is not intended to specifically address all the locks currently operating in the United States. Although much of the information presented is specific to miter gate locks, the same technology can be adapted to sector gate locks and also to the control of spillway gates. As referenced in this chapter a "new" lock control system does not refer only to a new lock construction project. Replacement or rehabilitation of an existing electrical system constitutes, for the purposes of this chapter, a "new" control system. Acronyms are defined in the Glossary. See Plate B-86 for a high-level flowchart showing the sequence of design development events for a typical lock and dam control system.

4.2 Design Considerations.

4.2.1 Operation. The standard operating procedure of a lock control system can vary greatly by district, river system, location, weather, size, and traffic conditions. Many of the concepts provided herein will have to be modified in order to meet the specific needs of different lock operations personnel. It is important to remember that coordination with personnel at the lock is of paramount importance when designing a lock control system. It will often be beneficial when visiting other sites to bring representative members of the lock operating crews to witness similar systems that are in use at other locks.

4.2.1.1 Manual Operation. For purposes of this section, manual operation of a lock is defined as equipment operation initiated by individual action from the lock operators. The control system architecture still includes a complete PLC system, but the system includes no automated sequences.

4.2.1.1.1 PLC Manual Controls. The basic control system for any lock should be individual PLC inputs from an MMI software package, hardwired pushbuttons, limit switches, encoders, transducers, and discrete PLC outputs to motor starters, contactors and pilot lights. For example, each miter gate leaf should have an OPEN, CLOSE, and STOP pushbutton for manual operation of the gate. This type of operation allows the lock personnel to control each piece of equipment individually with the full compliment of PLC interlocks, limits, and failsafe devices. This should be the minimum normal control system at any lock. Degrees of automation, as discussed herein, will vary by project site. Access to the manual controls should be at every control station, and at other areas around the lock as deemed necessary by the lock personnel. The manual controls should be simple and ergonomically designed with good visual feedback such as pilot lights and/or on-screen graphics. The manual controls should have a means of operating all the lock equipment including the miter gates, liftgates, culvert valves, tainter gates, traffic lights, bubbler systems, warning horn, emergency stop, lock lighting, small pleasure craft controls, and other equipment unique to each lock and required for day-to-day operation. The designer must spend ample time with the operating personnel to determine all the features to

include in the PLC Manual Control system.

4.2.1.1.2 Back-up Control Box. On locks that use a software MMI, such as larger ones with minimal hardwired backup, consideration should be given to providing a small portable control box that can be conveniently plugged in near the main control console area or at other strategic operating locations. This control box would provide direct inputs to the PLC and hence bypass the software MMI in the event of an IPC or network failure. Operation via the control box would still have all of the PLC interlocks and limits in place but the flexibility and feedback for the operator would be limited. The control box should be kept as simple as possible consisting of pushbuttons (lighted for positive feedback) for the miter gates, filling and emptying valves, traffic lights, and other critical features unique to individual projects. While all operators should be thoroughly trained in the use of the Back-up Control Box, and while written instruction for its use should be on site at all times, the control box unit should be viewed as a seldom-used back-up system to the IPC network. The Back-up Control box should be small and light enough to be portable and easy to store yet of sufficient strength and durable material. It is good practice to allow extra space on the control box panel to add additional functions as the need arises. Laminated nameplates should be screwed to the panel to allow easy replacement because the control box functions are likely to change as the operators get used to a new system. The back-up control box offers a safe, convenient way to upgrade IPC software and hardware without expensive lock downtime.

4.2.1.1.3 Minimal Emergency Back-up. A minimal hardwired Emergency back-up system should be provided for each major piece of lock equipment. The system should be kept to a minimum number of control features and should be as simple as possible. Consideration should be given to wiring in simple interlocks to provide protection when using the Emergency controls. Over-travel and other absolutely critical and failsafe devices should be hardwired into the motor starter or variable speed drives, with no possibility of bypassing them from any of the controls. These limits should only be those designed to prevent equipment damage or personnel injury. The minimal emergency back-up system should consist of just the controls needed to operate gates, valves, traffic lights, warning horns, and other features unique to individual locks that are deemed critical. In all cases, a lock control system should include an emergency stop pushbutton that is directly wired using normally closed contacts to the motor starters and variable speed drives. Activation of this button should stop all major lock operating equipment immediately regardless of the lock's operating mode. The designer should be careful not to make the minimal emergency back-up system more complicated than the normal control system. Solid state components should be avoided since the purpose of the hardwired system is to provide emergency back-up to the normal solid state control system. Excessive numbers of relays, wiring, displays, and solid state encoders can lead to a back-up system that is more complicated and difficult to maintain and trouble-shoot than the PLC system. The emergency back-up system should be electrically isolated from the PLC control system.

4.2.1.1.4 Contractor Controls. Consideration should be given to providing pushbutton controls, perhaps as part of the emergency back-up system, at the motor control center, variable frequency drives, and at remote motor starters, for use by the Contractor during construction. These pushbuttons may save the Contractor time and may take pressure off the System Integrator by allowing the General Contractor to "bump" motors and hydraulic cylinders for mechanical alignment purposes without expecting the System Integrator to have large portions of the

PLC/IPC programming debugged prior to moving equipment. These controls can either be integrated as part of an emergency back-up system, or de-energized after construction and check-out is complete.

4.2.1.2 Automatic Operation. For purposes of this section, automated operation of a lock is defined as operation of major lock equipment, i.e. gates and valves, that is initiated by the PLC or the lock control system without direct intervention from the lock operators.

4.2.1.2.1 Semi-Automatic Lockage. At present the most automated form of lock operation in the United States is called a semi-automatic lockage. In this sequence the operator uses two pushbuttons to perform the entire lockage. The first pushbutton prepares the upstream end of the lock for entry or exit and the second readies the downstream end. When a downstream vessel approaches the lock the operator pushes the first button and the PLC checks and closes the lower miter gates, checks and closes the lower emptying valves, and opens the filling valves. At this point the PLC waits until the lock chamber is the same level as the upper pool, and initiates the opening of the upper miter gates or lowering of the liftgate and the closing of the filling valves. The signaling of vessel movement, i.e. traffic lights and air horn, are done by the operator in a semi-automatic lockage procedure. After the operator has determined that the vessel is safely in the lock chamber and secured to the mooring bitts, the second command is initiated which closes or raises the upper gates, checks and closes the upper filling valves, and opens the lower emptying valves. At this point the PLC again waits until the chamber has lowered to the level of the tailwater and then initiates opening of the lower miter gates and closing of the lower emptying valves. When the gates are fully recessed and the vessel is clear to exit the chamber, the operator signals the vessel by sounding the air horn. This process requires only one person to operate a lock and frees that operator up to enter lockage data, arrange queues, operate tainter gates, operate adjacent locks, and other duties necessary to operate a facility. A semi-automated system streamlines the operation of the lock, reduces delays, increases efficiency, and yet at the same time does not increase risk because the operator is still in command of all vessel movements and signaling. This type of system should be considered for all new lock control systems, particularly those with high tonnage where an operator's time is critical, those with limited number of operators, or those that have operators who perform various other duties such as maintenance. Locks that have high head, especially small locks, may require refinements to the semi-automatic lockage sequence because of extreme hydraulic conditions. For example, two modes of semi-automatic operation could easily be programmed into the PLC system to allow for differences in pleasure boat and commercial boat operation. High head causes rapid filling of small lock chambers and can create excessive turbulence if not properly controlled. By implementing a special "pleasure boat mode of operation," in which the valves stop at specified intervals to slow the filling rate, turbulence can be limited. Sequencing of the valves can also be controlled to "pin" the pleasure boats to one side of the lock, as is often done when operating manually with existing control systems. Commercial boats typically can tolerate more turbulence so the "commercial boat mode of operation" can be programmed to fill the chamber faster than the pleasure boat mode. Whatever sequences are programmed, filling times and methods of operation should be closely coordinated with qualified hydraulic engineers and lock operating staff. A semi-automated lock should also have a manual system, a hardwired emergency stop, and a minimal emergency hardwired back-up system. In most cases a semi-automated lock will have one centrally located operator. With visibility limited from a central operating point, a Closed Circuit Television system will probably be necessary for such a system. Various other forms of automation should be considered as discussed herein.

4.2.1.2.2 Automatic Lockage. To date there are no fully automated locks in the United States and no plans to implement one. The safety, security, legal, and policy issues would have to be thoroughly addressed before a lock could ever be fully automated in the United States. Currently there are plans to fully automate the Panama Canal, and there is one fully automated lock in Europe. The Panama Canal when completed will sense the motion of the vessels using optical sensors and move the miter gates and valves accordingly. It will be an expert system that will coordinate moving of the vessels, using electric mules and winches, the filling and emptying of tandem locks, and movement of the miter gates. The system will even allow for the entry of special lockage information unique to each vessel to alter the filling and/or emptying of the chambers. Such knowledge now exists only in the experience of the lock operating staff, which will likely be reduced when the canal is turned over to Panama. In The Netherlands, the Dutch operate the only fully automated lock and dam in the world. This is a trial operating mode using lasers and intelligent radar to sense the moving of vessels and operate the gates accordingly.

4.2.1.2.3 Filling and Emptying the Lock Chamber. Filling and emptying of the lock chamber can be automated in several different fashions. The first is as discussed above in the semi- and automatic lockages. A more simple level of automation would have both filling valves operate simultaneously with a single operator command. The command could either be from MMI software or from a hardwired pushbutton input to the PLC. When automating the culvert valves the PLC can be programmed for any number of different sequences for different head conditions, pool levels, filling and emptying rates, delayed opening, pleasure crafts, light boats, and empty tows. Experienced operators will have to be consulted to determine the exact extent and requirements of automating the filling and emptying valves. This type of automation is generally simple to do and usually only requires programming once the PLC and field devices are in place and can easily be altered as needs change. Automating the filling and emptying of lock chambers should be considered with all new lock control systems.

4.2.1.2.4 Water Level Sensing Equipment. One of the critical procedures of an automated lockage sequence is the reliable sensing of water levels and determination of the “pools equal” condition. In other parts of this manual actual hardware and installation are discussed. Included in this section is automation of the water level sensing system. The water level sensing system should have redundant sensors for malfunction identification (i.e. at least two sensors in each measuring location). Malfunction of one sensor should lock out semi- or fully automatic operation. The operator under these conditions would visually verify that water levels have reached a safe level for manually moving gates. Consideration should be given to providing a built-in system for determining, through a series of checks and comparisons, which sensor has failed, and allow the automated sequence to continue, if possible, with that sensor “bypassed.” An alarm should be generated to alert maintenance personnel of the failure yet allow the lockage sequence to continue. Again, this type of automation does not require significant additional hardware, and the programming for such a system is fairly simple. For example, abrupt changes in signal level could be monitored through program logic to determine that a sensor has failed; if one sensor in a pair suddenly drops below tailwater or rises above pool level, then it has probably failed. The water level system can include other trouble-shooting features such as determination of type of sensor failure (i.e. power loss, signal loss, out-of-range, out-of-calibration), power supply failure, and PLC I/O failure. All of these help streamline the operation and repair of an automated system.

4.2.1.2.5 Bubbler Systems. Locks with significant ice or debris problems often rely on compressed air bubbler systems to remove such material from behind miter gates to permit the gates to properly recess. This process should be given consideration for automation. In heavy ice conditions miter gate "fanning," or alternately opening and closing gates to clear ice, and operation of the bubbler system is a procedure requiring significant operator interaction. Automation of such a process may be difficult because of the operator judgement involved, but under more normal conditions the bubbler system can be automated. Consider operating the bubbler system when debris or ice is sensed in the recess. Eventually, viable technologies may exist that could be used to determine the presence of such obstructions. Automation of the bubbler could also be tied to operation of the miter gate so that clearing of the recess area occurs with every opening of the gate. This would be wasteful at some locks, yet useful at locks where debris is a consistent nuisance. Tempering the use of high volume air compressors through programming and automation can also realize some significant energy cost savings.

4.2.1.2.6 Tainter Gates. Regulation of the pools on a river system is a responsibility that during normal river conditions could be controlled directly by the PLC with data input from Corps district hydraulic engineering personnel. Such a system could relieve the lock operator of the burden of making gate changes and allow time to more efficiently operate the lock. During times of low river flows, constant regulation of the pool and movement of the dam gates can impact a lock operator's time with the passing of river traffic through the lock. Conversely, heavy lock traffic can also delay critical gate changes on the dam. Design engineers should consider all possibilities when designing a new lock and dam control system or rehabilitating an existing one. Proper operating parameters should be incorporated into remote or automatic operation of dam gates. These include but are not limited to: switching to manual operation when gate is near closed, monitoring of communication loss to stop gate movement, and generating alarms for uninitiated change of state (possible pool loss), slow change of state (obstruction), or fast change of state (brake failure). Close coordination with lock operating personnel and district hydraulic engineers is imperative if automation of dam tainter gates is to be a success. This type of automation will likely become required in the future as personnel reductions continue to take place.

4.2.1.2.7 Remote Trouble-Shooting. All PLC lock control systems should be provided with the capability of remotely trouble-shooting via standard telephone lines. This provides a means for lock electricians to look at problems from an off-site location and provide guidance to lock operators when problems arise. District engineers can also provide assistance to trained, on-site lock electricians when complex programming revisions are required. The remote capabilities should allow designated qualified personnel to monitor and change ladder logic programming, operating screens, network parameters, and database files. Extensive changes to the control logic that are unsafe to make remotely or radically affect control actions should be deferred until they can be tested and debugged on-site. Designers should incorporate appropriate security firewalls into the system to prevent intrusion by unauthorized personnel.

4.2.2 Site Characteristics. When designing a control system for a lock and dam, it is very important to thoroughly review the unique features of that project. It is impossible to present a precise engineered design document that will be typical for all lock and dam control systems. That is not the attempt of this document. Rather, the attempt here is to promote ideas and consideration of certain features that affect the concept and design of a control system. Obtaining and reviewing documentation from existing lock and dam projects that have debugged and

functioning control systems is a good idea. However, it is important to remember that each site is different and what works well at one lock will likely need to be slightly altered to be successful at another. Contractors will not do this. Designers have to consider these and other features very early in the design process.

4.2.2.1 Size. The size of a lock is critical when deciding the number and location of control system equipment such as consoles, I/O racks, cabling, fiber optics, CCTV cameras, IPCs, and emergency back-up controls. While it will vary by project, larger locks generally have more of this type of equipment and it will be located in a distributed manner to reduce cable lengths. Arranging control and communication equipment to reduce, as much as possible, the number of lengthy cable runs is critical to insure a reliable system. Failures from rodent damage, construction or operation procedures, weather, and lightning are less likely to occur in protected cabinets with short, protected cable runs less than 30 meters (100 feet). While the initial cost of an extra intermediate I/O rack or communication point may not appear economical during the design phase, the cost of downtime and repair associated with failure will likely be much higher and at greater inconvenience. Larger lock and dam projects will have more electrical and electronic components located at greater distances from maintenance buildings and control houses. For this reason, designers should look at the possibility of installing, in strategic locations, network connections for lock electrical maintenance personnel to monitor all the control system features. These network connections can be used by a laptop computer to instantly obtain trouble-shooting and repair information on all PLC I/O points, MMI databases, and IPC operating screens. The funding required to install such communication points will be well spent considering the time it can take to travel between locations on 366 meter (1200 foot) locks or projects with 15 or more dam gates. Also, time should be spent considering the possibility of locating these connections in areas where lock personnel will be protected from adverse weather conditions. However, the farther repair personnel are removed from the trouble location the harder and longer it will take to restore the system to proper working condition. When trying to show economic justification for the extra funding, be sure to look at the significant consequences of downtime in addition to the relatively low probability of incidents when determining the “risk” of failure.

4.2.2.2 Layout. The physical arrangement of miter gates, lift gates, dams, spillways, service bridges, galleries, guidewalls, maintenance buildings, control houses, and access to these features will have an effect on the arrangement of the control system components. Procedures such as flood control, winter shut down, ice flushing, dewatering, open river operation, and general facility maintenance can all be considerations when designing a lock and dam control system.

4.2.2.2.1 Single Locks. Single locks, the most common at Corps sites, have an obvious need for a reliable control system because they lack the built-in redundancy of a second lock. At these sites it is imperative to provide some means of hardwired emergency back-up controls as discussed previously. These types of locks are often equipped with tow haulage units that increase direct operator involvement in the locking process. However, this does not preclude the justification or need for a certain level of automation. A semi-automated lockage process can free the operator to assist vessel crew members in pulling cuts while the PLC monitors water levels and operates lock gates. Fully automating a lock where there is heavy dependence on tow haulage units is not feasible at this point given shared responsibilities between the vessel crew and the lock operating personnel.

4.2.2.2.2 Double Locks. Generally, double locks consist of one larger main lock and one auxiliary lock. In the past it has required as many as five lock operating personnel to perform lockages during heavy traffic at such sites. Federal budgets are not going to support such crews in the future so it is incumbent on the part of the designers to consider this when laying out the control system. At some double locks, the smaller auxiliary lock is used strictly for pleasure boats. These locks may warrant consideration as user-operated facilities because an operator is on-site controlling the larger lock and can assist if problems arise. If the locks are both used for commercial and pleasure traffic, a centralized semi-automatic control system where a single lock operator can perform simultaneous lockages in both locks should be a strong consideration. Given certain types of traffic, volume of traffic, proximity to other sites, and other district considerations, potential remote operation of such a facility should be reviewed and considered during the design phase.

4.2.2.2.3 Tandem Locks. Tandem locks consist of one long segmented lock chamber with intermediate gates to facilitate high head lift in incremental steps. Tandem locks are used where the lift is too large to accomplish lockage in a single step. These locks, similar to those at the Panama Canal, make excellent candidates for automation because the emptying of one chamber fills the other. Water levels must be closely controlled to keep from over-topping the lower chamber or over-emptying the upper chamber. A PLC-controlled system can very precisely repeat a prescribed filling and emptying sequence to insure a safe and efficient project. If conditions exist that alter the normal sequence they can be programmed into the system and the PLC approaches an “expert” system. Depending on conditions described above, remote control of such a site is a design consideration.

4.2.2.3 Traffic. The volume and type of traffic that use the lock is perhaps the biggest consideration when deciding the optimal degree of automation. It also determines whether remote control is feasible, the location of control points and CCTV cameras, and other electrical/electronic control design features. Generally, the size of the lock and arrangement of the lock equipment has been previously designed for the location and traffic concerns of the project. However, on lock rehabilitation projects, the type and volume of traffic has likely changed since the lock was built. The new control system must be designed with current and future traffic projections in mind. Automation and remote control are two features that can address these needs.

4.2.2.3.1 High Volume. High volume locks, defined for the purposes of this chapter as those with annual tonnage in excess of 36,300,000 tonnes (40,000,000 tons), such as those on the Mississippi and Ohio Rivers, can generally support automation to streamline their lockage procedures. With this amount of traffic the lock is busy all the time and automation of certain functions, including the dam, help free the operator’s time to more efficiently operate the lock. Additional costs for redundancy, remote trouble-shooting, spare parts, back-up control systems and reliability of equipment are usually easy to justify at these high volume sites. Remote control of such a facility is a potential consideration that should require very little additional cost to build into a new computerized control system.

4.2.2.3.2 Low Volume. While lower usage locks may not support the same construction costs as higher volume locks, the control system can be designed for operation by fewer personnel. Often a single electrician maintains more than one project, and remote trouble-shooting and repair capabilities can greatly enhance their ability to accomplish this. When

several locks in a system are relatively close together remote operation from one point with automated lockage sequences at each site can enhance the efficiency of the system and cut operating costs. Control system designers should consider these possibilities, if not for immediate use, then for future possibilities.

4.2.2.3.3 Commercial. Commercial vessels comprise the bulk of the traffic at high volume locks, while low volume locks often have a large percentage of pleasure boat traffic. Automation is somewhat easier to implement for commercial tow lockages because vessel movement is slower, more consistent, generally predictable, and vessel operators are usually more experienced in using the locks. For this reason a semi-automated system will work well for high volume locks. Remote control may be harder to justify because a single operator would have to control multiple remote locks for economic justification. The higher volume locks have enough traffic to justify an on-site operator. However, consideration should be given to providing the potential for future remote operation, perhaps during slow traffic, because the cost is minimal after a computerized control and CCTV system are installed.

4.2.2.3.4 Pleasure Craft. At all locks, the unpredictability and inexperience of pleasure boat operators, coupled with the lack of radio communication and the vulnerability of small craft occupants, require lock operators to have more direct control over the lockage sequence. Automation of dam gates and lock filling and emptying can give the operator extra time to pay attention to the special needs of pleasure boat occupants.

4.2.3 Control Rooms. The operational success of a lock and dam PLC/IPC control system can be greatly affected by the interface between the operator and the computerized control system. Usually the point of interface is a control console located in a lock control room. Control rooms should be designed with safety and the needs of the operator in mind. From an equipment standpoint, locations of consoles, CCTV monitors and controls, marine radios, public address systems, IPC monitors, printers, and vessel logging computers can be located essentially anywhere. With today's technology, the flexibility of such equipment allows for the design of the control room to be based almost entirely on the interests of the lock operators. However, often when changing from a traditional hardwired localized control system to a computerized central control room, it is difficult for a lock operating staff to determine their exact needs for the new system. The purpose of this document is not an attempt to define the ideal control room layout, as this will vary greatly from project to project, but rather to provide designers with guidelines for determining the needs of their individual control rooms and meeting those needs with an effective ergonomic design. It is important to remember that no design will satisfy the needs of every operator, and the final product will ultimately have to be modified to meet the changing needs of the lock operators as they become accustomed to a new system.

4.2.3.1 Access. The designer should consider the accessibility of the control room and its equipment when determining the proper layout for a lock control system. The degree of accessibility required will often be determined by the type of control system employed, namely manual versus automated. Once this determination has been made, the control house layout design should proceed with the safety and convenience of the operators in mind. Following are some points to consider for accessibility of a new or refurbished control room.

4.2.3.1.1 Manual Systems. In manual systems or systems with tow haulage units that require direct operator intervention to the locking process, the control room should be located as

accessible as possible from the lock wall. This may compromise the flexibility of the control room layout, but will be more efficient for an operator that must return to the lock wall often during lockages. The layout of the control system components, such as those listed herein, should allow the operator to have access to the lock wall and as much direct visibility as possible. Equipment within the control room will have to be arranged in different fashion to allow an operator to use it in a more mobile mode. Operators will often be entering or exiting the control room and will need quick, handy, control system interfaces, rather than elaborate ones designed for the operator who is at the controls on a continuous basis.

4.2.3.1.2 Automated Systems. Lock wall access to and from the control house is less significant with automated or remotely operated control systems. In this type of control system the control room can be oriented to provide the most convenient accessibility to control console components without as much emphasis on access to the lock wall. Where possible, direct visibility of the lock should always be a consideration. With access not as much of an issue, higher elevations, such as on top of a service bridge pier, provide a good location for a centralized control room. In an automated system having single operator control, CCTV monitors become the main focal point of the operator's attention. These should be positioned to give the operator not only convenient access, but also a matching orientation of the actual lock equipment so quick reference can be made when examining the monitors. In other words, downstream views made looking at the landside of the lock should be the same when looking at the CCTV monitors. Orientation of the IPC graphic operating screens should also match the physical orientation of the lock equipment.

4.2.3.2 Visibility. Direct visibility of the lock and the area around the lock should be provided if economical and architecturally feasible, even in highly automated control systems. Designers should not, however, compromise the economic justification of automating a system by providing excessive means of direct visibility of the entire lock and dam facility. Although this sounds contradictory, and on certain designs can be a fine line for the designer to walk, the designer must determine the operator's needs for direct visibility. Often a control room can be designed where direct visibility and CCTV monitors compliment rather than compete with each other. This balance creates a more efficient and convenient working atmosphere. An operator does not have to fumble around looking for the correct orientation if the monitors are set up to provide views the same that direct visibility would. In an automated centralized control room, consider positioning and orienting control consoles and CCTV monitors so that direct visibility is available without the operator leaving the console area, or continually rotating more than 90° in either direction to see the lock approach areas. In manual systems with local control houses located at the lock wall level, position consoles and CCTV monitors to provide convenient views of approach areas, guide walls, culvert valve discharge areas, dam or spillway gates, and other areas that are hard to see from the lock wall level. Little things like this will help the operator monitor the whole project while keeping distractions to a minimum. In the future it is very likely that there will be less workforce at the locks, and operators could have other maintenance and security type duties to perform simultaneously with vessel lockages. Designers need to consider and plan for this by making the system convenient and safe to operate while increasing the efficiency of the project.

4.2.3.3 Layout. A good control system that is difficult to access or use is really not a good control system. Therefore, the layout of control rooms or areas is critical to the lock operator's perception of a quality system, and hence the success of the system itself. Figure 4-1 shows a

proposed new layout for the Melvin Price central control room. The new layout will accommodate operation of the two lock chambers at Melvin Price Locks and Dam plus a third remote chamber operated locally at this site. Note the use of three separate and distinct work surfaces, one for each lock. Also, note the use of rack-mounted PLC and IPC equipment to conserve valuable floor space.

As stated above, the parameters guiding the control room layout will be different between a manual lock and an automated facility. The size and type of traffic, as well as the amount of traffic, should also help determine the location, size, and layout of a lock control room.

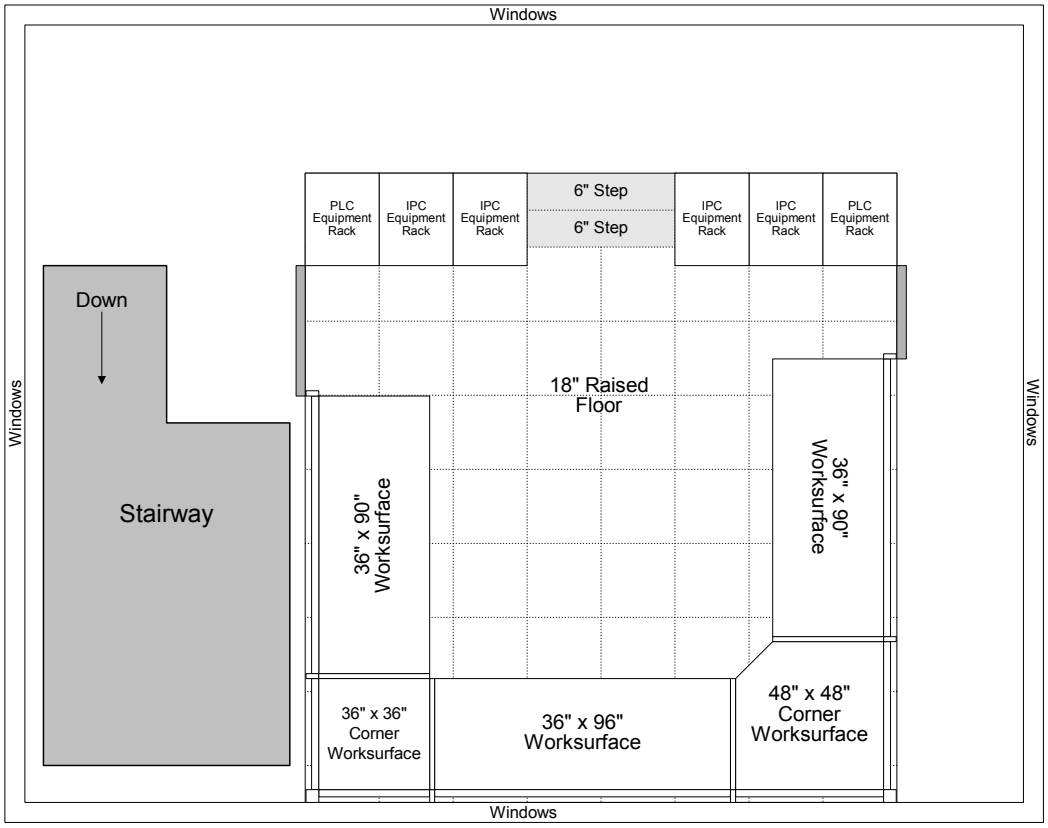

Figure 4-1 Melvin Price Central Control Room

4.2.3.3.1 Automated Systems. Automated systems require much less direct visibility on the part of the lock operator. However, as stated above, this does not mean that direct visibility will not enhance the efficiency of the lock. Designing a control house in an area to provide maximum visibility is a good practice, provided it is economically feasible. Remember that CCTV monitors can be used to provide quick, convenient visual feedback of vessel movement, status of gates, and debris in the water, while direct visibility usually provides better feedback of large, distant areas such as approach forebays. For this reason, a centralized control room usually makes a better system if it is located at a height above the lock wall with a good view of the upstream and downstream lock approach areas. Automated systems usually justify single control rooms for centralized operation of the entire facility by a single operator. Such a control room should be kept relatively small with all the control and monitoring equipment within convenient reach of the operator. Administrative areas, maintenance areas, and visitor accesses should be kept separate from the control room in order to minimize distractions to the operator. A reasonably accessible break room with restroom facilities, stove, microwave, and refrigerator should be

considered where possible. Take under review the possibility of providing a means for fresh air ventilation during pleasant weather. These will all help to increase the overall efficiency of the lock.

4.2.3.3.2 Manual Systems. Because manual systems require much more direct intervention by the operator, control rooms must be kept near the lock wall area. This greatly reduces visibility of the lock approach areas and dam or spillway gate areas. A CCTV system can supplement the operator's efficiency by providing continuous views of these areas. This type of control room will require a different arrangement of equipment because an operator will be moving in and out as they perform lock wall duties, such as operation of a tow haulage unit, that are necessary in a manual control system. Control rooms of this kind will be exposed to weather, traffic, dust, and dirt much more than a centralized control house since they share duties with administrative, maintenance, and visitor access functions. These factors could shorten the life of some control system components and should be a consideration when laying out such a control room. Protection of the equipment and convenience for the operator may be factors that require compromise in the layout of a manual control room.

4.2.3.4 Redundancy. All control systems should be provided with back-up control devices as well as redundant points of control. With the exception of a remotely controlled lock and dam, for which there should always be an on-site control room with full capabilities, the need for redundant control rooms or houses is not justified at most locks. In contrast to a control point, a control room or control house is an area where lock controls, CCTV monitors and controls, marine radios, telephone lines, vessel logging PCs, water level readouts, weather instrumentation readouts, and dam or spillway gate controls are grouped together to facilitate operation of the whole project. The enhanced reliability and piecemeal failure tendencies of modern control and CCTV systems make the probability of a catastrophic control room failure significantly less. This decreases the economic justification for a full blown redundant control room. Consideration should be given to providing local controls near the lock operating machinery. These controls can be in the form of a plug-in pendant, network connections for laptop PC's, permanently mounted hardwired pushbuttons with pilot lights, or a combination of these depending on the needs of the lock operators and maintenance crews. These stations can be designed as local control points as well as redundant back-up controls for the primary lock control room. Redundant control points in these forms do not add significant cost to the design or construction of a new control system and will go along way to enhance the operator's confidence in the operational reliability of the project. Often redundant controls can be used to perform maintenance duties without distracting the operator or affecting operation of the lock.

4.2.3.5 Operating Consoles. The operating consoles are the actual point of interface between a lock operator and a computerized control system. A design engineer should spend significant time reviewing all of the factors that make a control system operator interface user friendly, efficient, convenient, and most of all safe. What follows are discussions and guidelines for some of the equipment located on a centralized control console. Ultimately, it will be the responsibility of the designer to provide this equipment, other equipment unique to each lock, and capacity for additional equipment that will be added after lock personnel begin operating the facility. For locks that require smaller more localized consoles, it will be up to the designer to determine the best location for the following control devices.

4.2.3.5.1 Construction. The control console should be designed and constructed to act as a

single unit. Modular off-the-shelf component construction is a good choice provided the components are of the same manufacturer and are intended to be connected to act as a single unit. Specifications should provide that all materials including metal, hinges, shelves, finishes, and paint, be of top quality with first rate workmanship and installation. This is important because repair and maintenance of the control console will affect all operations of the lock and dam. Control consoles can be of many different shapes and sizes depending on the type of control room and the functions required. All equipment contained within the control console should be easily accessible from the outside through hinged doors, slide drawers, or easily removed panels. Auxiliary equipment such as 120-volt receptacles, cooling and ventilating fans, filters, uninterruptible power supplies, power strips, radio and radar power supplies, and networking hubs should be specified in the design document. If the consoles are not thoroughly designed as part of the plans and specifications, a contractor or lock operating personnel will try to fit all of this equipment into a console structure that does not have capacity to accommodate it. The result will be an overcrowded and hard to maintain control console. All control console design and construction should include provisions for adding components to the existing structure and expanding the console itself. Equipment that the lock operator does not have need to access such as PLC I/O racks and complex CCTV switching circuitry should not be contained within the operating control console.

4.2.3.5.2 Emergency Stop. The most important control component and the one that needs to have the most convenient access is the hardwired emergency stop button. This device should be located in a conspicuous area on the front of the control console where it will not be inadvertently activated. It is a good idea to provide several emergency stop buttons at locations having good view of the lock that are frequented by operation and maintenance personnel. Emergency stop pushbuttons should be of the maintained type with red mushroom heads. Consideration should be given to illuminating them to indicate when the emergency stop is active. Illuminated pushbuttons can also be programmed to flash to remind the operator that equipment is operating. This may be important if operating from a centralized control room that is remote from the equipment. It also serves as a reminder should the IPCs fail during operations.

4.2.3.5.3 Closed Circuit Television System. While it is a good idea to consider a CCTV system with all lock control systems, automated or remotely controlled facilities require it. With this type of system, because direct visibility will be limited, the CCTV system monitors should be considered the primary means of visual feedback to the operators. It is imperative to locate monitors where they will be convenient to view. Factors such as glare, operator comfort, viewing angle, and accessibility should all be considered when placing CCTV monitors in a control console. Generally, arranging CCTV monitors at a low level near the console worksurface, at a slight incline towards the operator, will satisfy these factors. See Figure 4-2 for an example console showing the CCTV monitors placed at the working level, with control monitors placed above them.

When deciding the number of monitors to provide, a designer should consider that a lock operator needs to monitor several different views of the lock at all times during a vessel lockage. Certain areas of the facility often must be monitored for security reasons or dam and spillway gate movements.

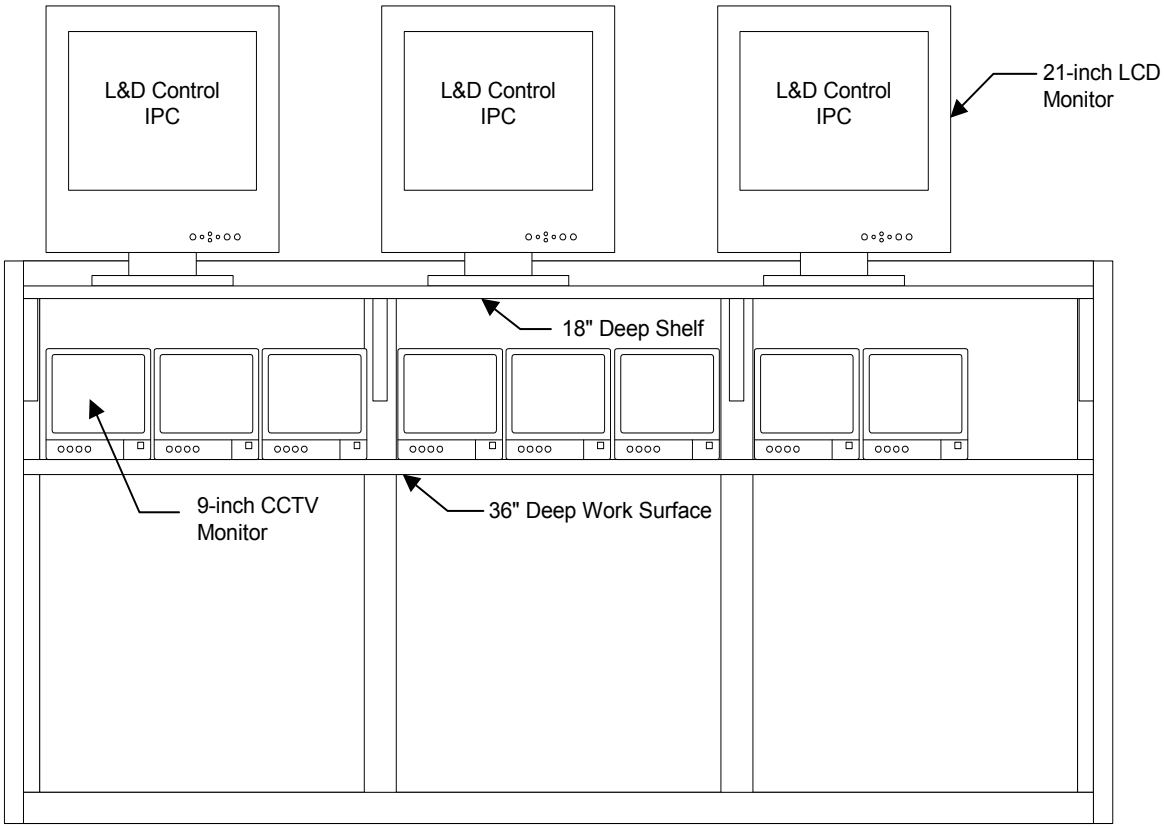

Figure 4-2 Typical Control Console Section

Switching the same monitor between cameras on a continuous basis can be time consuming and inconvenient leading to a tendency not to monitor certain areas of the lock. The cost of adding additional monitors to a CCTV system during the design phase is really not significant considering the long term flexibility, reliability, and redundancy they provide for the system.

4.2.3.5.4 IPC Control Network. The primary means of operating a new lock control system will normally be an IPC network with workstations running an MMI software package. See Figure 4-3 for an example showing the control network used at Melvin Price Locks and Dam. This diagram shows the central control room with three computers for control of each lock. It also shows how they are networked with the rest of the facility.

Because the MMI operating screens are used to convey operator commands to the lock PLC controller, the IPC monitors should be located where, aside from the CCTV monitors, they are the easiest and most convenient control system component to view. Because an operator will often be accomplishing other duties simultaneously while operating the lock equipment, IPC monitors that are located above the CCTV monitors and at approximately shoulder level will provide a good viewing angle for the operator. IPC monitors should be as large as practicable with a recommended minimum quantity of three for each lock chamber. Three monitors will allow the operator flexibility to control different features of a lock and dam without excessively switching screens. Two monitors can be used at small low-usage locks, but this should be considered the minimum. A single MMI screen does not

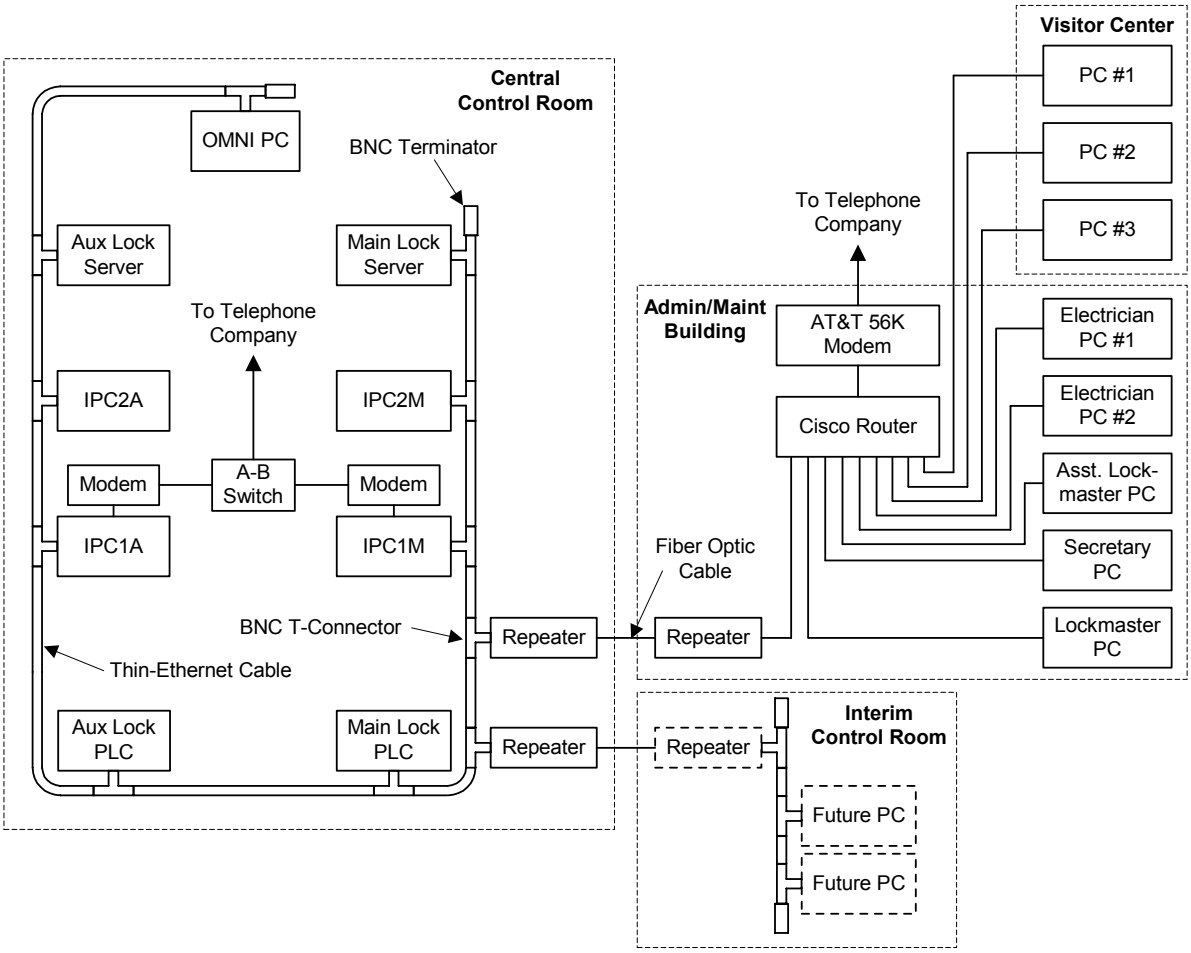

Figure 4-3 Example IPC Control Network

provide any redundancy in case of video display failure. MMI screens often use graphical representations and the monitors should be positioned to give the operator approximately the same orientation as direct visibility would. With a mouse or touchscreen as the primary operator interface, convenient drawers to store keyboards are a good consideration. This will keep the console top clear and allow more space for the operator to do their paper work.

4.2.3.5.5 Vessel Logging PC. Major locks usually have a PC dedicated to logging vessel cargo and lockage information. Busy locks, such as key locks that are the first on a river to enter vessel data, require frequent monitoring and data entering into such a system. An operator will actually spend more time at this computer than at the lock operating IPC network workstations. Therefore, this PC should be located where the operator can conveniently sit down and log information (i.e. at the standard 760 mm (30-inch) desktop elevation with convenient keyboard and mouse, extra space for vessel lists and other paper work, and a comfortable standard office type chair).

4.2.3.5.6 Marine Band Radio. An operator will spend significant time on the marine radio arranging queues, and acquiring vessel cargo information. Lock operators will likely move the radio to several different locations on the console while they are getting used to the new system. For this reason, it is probably not a good idea to provide a permanent location for mounting the radio. Rather provide means to move the radio to any location on the console allowing the operators, after they are accustomed to the new control system, to station the radio where it is most convenient for them.

4.2.3.5.7 Telephone. Unlike the equipment listed above, the telephone is not used with every vessel lockage. The location of the phone is another item that designers will have to rely on lock operating personnel to locate. Strong consideration should be given to consolidating the telephone system and the lock public address system into one integrated telephone communication system with dial-out and paging capabilities. Having such a system installed by the local telephone company will result in a better, more flexible system requiring less space on a control console. Multiple lines, zone ringing, paging, voicemail, and other features will provide even more convenience and efficiency for the lock operators and will cost less than separate telephone and public address systems. This effort should be coordinated with the district Information Management Office, Telecommunications Branch.

4.2.3.5.8 Printers. Providing network printers and/or printers for the vessel logging PC as part of the control console is a good idea. However, printers are not used with every lockage and their location should not compromise the location or accessibility of the CCTV monitors and controls, the IPC network workstations, or whatever direct visibility may be available from the control room. Printers can be shared with maintenance computers.

4.3 Main Control Equipment and Instrumentation.

4.3.1 Programmable Logic Controllers. All new lock and dam control systems should be designed with a Programmable Logic Controller as the control system backbone. The PLC should be off-the-shelf standard equipment from a reputable manufacturer. The PLC is the primary means of control for all lock and dam operating equipment. Power equipment monitoring and plant lighting control are features that can enhance the efficiency, cost, and reliability of a lock and dam facility. The intent of this document is to provide designers guidelines and issues to consider when laying out a new PLC lock control system. Size, communication speeds, capacities, performance parameters, location, and number of PLC components will vary from project to project. Ultimately it will be the responsibility of the designer to determine exactly what system is right for their project.

4.3.1.1 Central Processing Unit. The central processing unit will perform all manipulations to input data, update all outputs, provide the information for MMI software to update operating screens, and accept operator commands from the MMI. The CPU should generally be located near the central control room area but not in the main control console. The CPU is not equipment an operator needs to access on a daily basis. Whenever possible the enclosure housing the CPU should be installed in a dry, low humidity, low traffic, protected area. Only qualified maintenance personnel should have access to the PLC system CPU. Specifying an appropriate amount of memory for the CPU is an important concern when designing a PLC system. Memory usage is different between PLC manufacturers so it is important to specify an amount of memory that provides adequate capacity. Typically CPU memory is specified in terms of K units where

each K unit is 1,024 words (two bytes). After becoming familiar with how memory is utilized in several PLCs, designers should determine the maximum memory requirements for the application. There are several rules of thumb, but none can be used without first knowing the approximate number of output points (i.e. real-world outputs plus internal relay coils) in the system. Once that number is known, an estimate must be made for the amount and type of instructions associated with each output (the number of words required for each instruction is dependant on the CPU manufacturer and can be determined by consulting the manufacturer's PLC literature). Then the minimum amount of memory required is simply the estimated memory required for each output multiplied by the estimated total number of outputs. It would be wise to add an additional 25 to 50 percent more memory to allow for changes, modifications, or future expansion.

4.3.1.2 Procurement. Procurement, installation, and programming of the CPU should be provided for in the contract documentation. Particular care should be taken when writing contract specification requirements to include a unit with the highest performance available. Such parameters include the largest amount of memory, fastest communication speed, highest program execution rate (scan time), maximum amount and type of I/O capacity, number and flexibility of communication ports (serial RS-232, RS-422, Ethernet, etc.), special proprietary communication ports, self diagnostics, and the largest set of internal instructions. Compromise may have to be made in order to get the ideal processor for an individual project, but an effort should be made to get the highest quality equipment with the most capacity, performance, and options in order to insure adaptability to future needs. Because PLC equipment does not become obsolete as fast as PCs and software, preparing for future capacity is a good idea. Without well-written complete specifications with well-defined parameters such as those listed above, the designer is at the mercy of the contractor to provide a quality processor. Often the "grade" of processor quality will determine the quality of the rest of the PLC system components and hence a large majority of the cost. A low bid contractor is not going to provide a state-of-the-art top of the line system unless it is well specified in the contract documents.

4.3.1.3 Remote Input/Output. Determining parameters for a good system of input and output PLC components is not necessarily straightforward. Manufacturers often provide several different grades of I/O components for a top-of-the-line CPU. Parameters such as isolation, density of points, response times, operating voltage levels, power requirements, fusing, and LED diagnostics should be considered when specifying I/O components.

4.3.1.3.1 Surge Suppression. Noise suppressors should be used to protect PLC equipment from the voltage transients, spikes, and electrical noise appearing on power circuits. Such noise suppressors would be installed in each I/O rack enclosure and connected to the power supplies feeding each I/O rack. To guard both communication modules and communication cable (metallic only) from damage, I/O interface modules should be protected with overvoltage transient surge suppressors. To accomplish this, a device that suppresses transients caused by lightning, inductive switching and electrostatic discharge must be used. In those applications where an inductive load, such as a motor starter or solenoid, is wired in parallel with an input module, a surge suppressor should be installed. A typical suppressor consists of a 0.5 μF, 400 volt capacitor with a 220 ohm resistor in series. Procurement and installation of these should be coordinated with the PLC manufacturer.

4.3.1.3.2 Digital Input Modules. A designer must first determine the basic requirements for I/O component types in different locations on the lock and dam facility. Where there are “dry contact” type inputs, digital (discrete) input cards should be provided. Such inputs could include traveling nut and mercury cam limit switch assemblies, pushbuttons, selector switches, relay and motor starter auxiliary contacts, vein and/or magnetically operated limit switches, thermostats, and photocells. Digital input cards can be specified to be isolated or non-isolated. Both types serve useful purposes in lock and dam applications, and in some circumstances both types should be provided in the same I/O rack location, even though this increases the required number of spare I/O card types. Certain digital inputs, such as control panel pushbuttons or limit switches on the same assemblies can be grouped together on input cards using a single “reference” or neutral conductor and termination point. Often a single common conductor can be connected to these types of input groups. This requires non-isolated digital input cards. More remote inputs operating at different voltage levels such as photocells, thermostats, and magnetic limit switches should be isolated from other inputs. Select a voltage level for each group of inputs to be the lowest possible without excessive voltage drop or capacitive coupling. In most cases, if voltage drop or capacitive coupling is a problem, an additional I/O rack assembly can be installed to reduce conductor lengths. A voltage greater than 120 VAC should not be used for PLC input systems except in special cases. With the reliability and “hot-shadowing” capability of most I/O power supplies, the recommended PLC control system voltage is 24 volts AC or DC. With the density of points available on today’s small I/O cards, it is usually feasible to use an extra input to monitor power supplies and alert maintenance personnel to failures as well as switching to an alternate unit without interruption in the control system process. A designer should try to maximize the number of I/O points of each type available at each location by specifying the highest available density cards. It is important though not to compromise other features such as isolation just to achieve more I/O points. It is unwise, and will ultimately cost more in inconvenience and downtime than the money saved in first cost, to provide a minimum number of I/O cards, or lower quality I/O cards with more points on each card. Therefore a good rule to follow is to first determine the type of inputs and the requirements for isolation and voltage levels. Next, specify the highest density card that meets these requirements. Specify enough cards of each type to provide a minimum of 100 percent spare I/O capacity beyond any known future expansion plans.

4.3.1.3.3 Digital Output Modules. There are many different types of digital outputs required in a lock and dam PLC control system. Some of the more common types include motor starters, solenoid and motor operated valves, pilot lights, relays and contactors, bells, sirens, and horns. As with digital input cards, some outputs can be grouped together using non-isolated output cards. These outputs, usually pilot lights or relays of the same coil voltage, utilize the same common source and the same neutral wire. Other outputs with varying voltages and/or inductive load conditions require isolated digital output cards, sometimes called relay cards. These types of cards provide a single output for each common, are electrically isolated from other outputs, and can have different voltage levels for each output. All outputs should be fused either internally to the output cards or externally at a power supply or at the load. This protects the card as well as the field wiring. Output loads should be carefully reviewed to ensure they do not exceed the load capacity of the output cards. In cases where the load ratings required are high or marginally high, or have high starting currents such as motors, pilot (interposing) relays should be used to provide a smaller, more consistent load on the output card as well as isolate it from more unpredictable power system faults. When specifying output cards, designers should follow a rule similar to that for input cards. First, determine the need for output cards at different

locations in the system. Second, determine the operating voltage level, the need for pilot devices, the need for isolation and fusing, and the quality of card necessary for the system. Third, specify the highest density card that meets all of these requirements including the spare capacity as stated above for the digital input modules. Whenever there is doubt, remember it is easier to remove cards or exchange them rather than add them if there is insufficient space or capacity.

4.3.1.3.4 Analog Input Modules. Analog input devices include rotating shaft encoders, resolvers, inclinometers, pressure transducers, RTDs, and hydraulic cylinder position tracking systems. Most PLC manufacturers can accommodate several different types of analog input signals, often using the same card. Input types include 4-20ma, 0-10v, -10 - +10v, and so forth. When specifying analog input modules it is important to address features such as input current/voltage ranges, number of channels, impedance, resolution, accuracy as a percent of full scale, electrical isolation, shielding, fault detection, update time, I/O bus power requirements, and fusing. Analog signals present a much greater challenge to designers because inaccuracies, without failure, can occur very easily from electrical magnetic noise, improper grounding or shielding, mismatched impedances, or combinations of theses. If these items are not properly addressed by the contract specifications, problems with drifting signals will ultimately occur, possibly after a contractor is long finished with the job. These types of problems can be very difficult to find and correct. Specifying high quality isolated analog input modules will help keep these problems to a minimum. When designing a PLC system with analog inputs, a designer should first determine the location and type (current or voltage with range) of analog inputs required. Where possible, without making signal cables excessively long, these inputs should be grouped together to make use of multi-channel analog input modules. Full scale accuracy and resolution should be determined for each analog input by first determining the accuracy of measurement required to control the system. For example, if a gate raises and lowers a maximum distance of 9 meters (30 feet), and the operator needs to know the position to the nearest 3 mm (one hundredth of a foot), the range of travel is 3000 “counts” with each count equal to 3 mm (one one hundredth of a foot). In addition, say a rotating shaft, 4-20ma analog transducer mounted to the cable drum or chain sprocket produces a 5ma current signal at 0 meters (0 feet) and 15ma current signal at 9 meters (30 feet) of gate travel. To achieve the accuracy required by the operator the PLC analog input card must be able to resolve 10ma of travel into a minimum of 3000 counts. Because the full-scale range of the transducer is 4-20ma or 16 ma this equates to 4800 counts over the full range. This requires an accuracy of 1/4800 or roughly 0.02 percent of full scale, with resolution of 4800 counts or 13 bits of accuracy. Failing to properly perform this type of design analysis can result in a signal or analog input card that is not accurate enough through the entire range of travel to use for effective machinery control or position determination. When physical location, voltage/current range, accuracy, and resolution requirements for each analog input has been established, PLC analog input cards should be specified which meet all of these requirements. If possible a single type of analog input card should be used throughout the entire system. Often a jumper or dipswitch setting is used to configure each channel on a card for different current and voltage ranges. Specifying electrical isolation levels, register update times, and fault detection features help insure that the Contractor provides a quality product. The impedances of the analog input card, the cable, and the transmitting device should be analyzed when determining the voltage level of the power supply that drives the current loop. Shielding should always be accomplished in accordance with written recommendations from both the transmitting device manufacturer and the PLC manufacturer. Signal shield grounds should be isolated from power grounds.

4.3.1.3.5 Analog Output Modules. When motion controllers, variable speed drives, hydraulic linear variable differential transformers, or other control equipment require current loops for speed or position reference, designers may want to use analog output cards to interface the PLC system with such equipment. Because a margin for error exists when using analog control signals, designers should, before deciding to use analog output cards, exhaust all possibilities for digitally integrating such equipment using serial communication standards. This will make a simpler, more reliable control system that will likely be more flexible because of the amount of information that can be transmitted digitally. If, however, it is determined that analog output cards are necessary, the system designer should follow the same steps as outlined above for the analog input modules. Again, the objective is to perform a design analysis on each device that is driven by the analog output points to determine the exact requirements for the output cards, wiring, shielding, and power supplies. Always try to specify the highest quality component available for the system.

4.3.1.3.6 I/O Enclosures. Remote I/O components should be installed in metal enclosures complete with power supplies, power line conditioners, isolators, I/O component racks, ventilating equipment, desiccants, heaters, air conditioners, communication equipment, pilot devices, and uninterruptible power supplies. The enclosure should be NEMA rated as required for the area in which it will be installed with locking door hardware. Outdoor enclosures should be suitably rated and shielded against sunlight if located in direct exposure to the sun. Remote I/O racks should be as required for the type of cards specified and should have at least 50 percent empty slots for future upgrades and expansions. Where applicable, I/O rack addressing should allow for the empty spaces to be used without readdressing an entire program. In order to achieve the goal of a reliable system, it is important that design engineers look at all of the components necessary in the I/O enclosures to insure they are of proper size, rating, and capacity with proper space requirements for dissipation of heat. Calculations should be accomplished for sizing heating, air conditioning, and ventilating equipment. All of this should be given in a design specification so that a Contractor will provide the highest quality equipment helping to ensure a long term reliable system. One of the critical parts of the I/O enclosure design work is the grounding of the electronic and communication equipment contained within the enclosure and the enclosure itself. The National Electric Code does not cover in sufficient detail the grounding of such equipment. Therefore, references to the NEC within plans and specifications do not guide a Contractor very well in the area of electronic ground systems. In general it is wise to keep electronic grounds separate from power and conduit system grounds even if ultimately the two are tied together at some grounding point. Keeping the electronic equipment out of the path of other potential ground surges is important. Input/Output racks, power supplies, communication interface equipment, and other electronic equipment should be mounted to the I/O enclosure metal using rubber or plastic standoffs to isolate them from the enclosure itself. Most electronic equipment is provided with a ground terminal and instructions from the manufacturer on how to ground the equipment. It is very important to properly ground and shield all electronic equipment.

4.3.1.4 Network Configurations. Programmable logic controller systems can be networked in several different configurations. The general guideline is to locate I/O racks in areas where limit switches, motor starters, and solenoids are grouped. Networking of I/O racks on PLC communication channels should be laid out in a design document with consideration given to fail override and redundancy. On navigation locks these guidelines usually require a four-corner I/O rack arrangement with land wall I/O racks on one channel and river wall I/O on another. Some

locks may be able to put each I/O rack on its own channel. For general design guidance the following points are offered.

4.3.1.4.1 I/O Rack Location. The first objective is to determine the number and location of system I/O racks. A designer must first survey and chart all the I/O points necessary to operate the lock. This includes all discrete and analog points. Sorting the I/O point list by general location will give the designer an idea of where the I/O points are concentrated. Input/Output racks should be located in areas where a significant number of I/O points are grouped, taking care not to use so many I/O racks that the overall number impacts the availability of the system by increasing the number of failure points. It is difficult to determine what the minimum number of I/O points in an area is that requires installation of an I/O rack. This will vary from project to project and is relative to the overall number of I/O points. An important consideration is the number of lengthy control circuits that can be eliminated by the installation of an I/O rack. An objective that a designer should have in mind is to keep hardwired difficult-to-diagnose I/O circuits as short and accessible as possible. With fiber optic technology, lengthy communication circuits are not only possible but also easy to maintain, diagnose, and repair. Therefore, a designer should not be afraid to specify additional I/O racks in remote areas where there are relatively few I/O points. In any case, an availability analysis should be done to determine the optimum number of I/O racks for the application. In some cases, the analysis may show that fewer I/O racks, with longer cable runs, provides the optimum system availability. In cases where single I/O are remotely located from I/O racks consideration should be given to using optical switches and sensors.

4.3.1.4.2 I/O Rack Networking. After the location of I/O racks has been determined it will be necessary to connect them in a network configuration. While a star configuration offers the most reliability, PLC processors usually do not have enough communication ports to talk to each I/O rack on a separate channel. Therefore it is necessary to group the I/O racks on communication channels. If possible, adjacent locks should be on separate PLC processors. If this cannot be done, the locks' I/O racks should be separated on different PLC communication channels. This isolation will prevent a failure on one channel from shutting down I/O racks on another channel. Input/Output racks used for control of dam or spillway gates should always be on separate PLC network channels from the lock I/O racks for the same reason. Communication between I/O racks should generally be via high quality fiber optic cables as recommended by the manufacturer of the PLC system. Specifications should be so written to provide the fastest I/O network communication speed available. This will help insure that the system the contractor provides is of high quality. All PLC I/O network channels should be provided with redundant "hot-shadow" back-up fiber optic communication cables. Internal diagnostics should alarm that a problem has occurred on a communication channel while the system automatically reverts to the redundant channel without loss in process. Converters, power supplies, and other communication equipment should all be supplied by the PLC manufacturer. A third party may provide such equipment, but only as recommended by the PLC manufacturer. This also will help insure a quality PLC system.

4.3.2 Industrial Personal Computers.

4.3.2.1 General. Industrial personal computers (IPCs) are typically used in critical applications where downtime must be kept to a minimum. IPCs are built to withstand a wide variety of environments. They are specially shielded against electromagnetic and radio frequency

interference and certified to meet Federal Communication Commission EMI and RFI regulations. They are also built for a wide range of temperature extremes and can withstand extreme thermal stress. IPCs are built with shock and vibration resistance for rugged and heavy-duty use.

4.3.2.2 System Design. Compared with industrial applications, operation of a lock and dam probably cannot be considered a critical process. If a control computer fails, the worst that can happen is gates stop movement, temporarily trapping tows or preventing water level regulation until operation resumes from alternate hardwired control points. This should not result in costly delays since hardwired means of operating are designed into the control system. A manufacturing plant, on the other hand, cannot tolerate even a few minutes downtime without incurring thousands of dollars in lost earnings. This may raise the question, "Why design computer control systems for locks and dams around IPCs?" This is a legitimate question because of the high initial cost of IPCs. Less expensive non-industrial PCs can typically be purchased for less than half the price of an IPC. Spare PCs can be purchased and kept on hand for quick replacement in the event of a failure. So why design around IPCs? IPCs are designed to last longer than regular PCs for the reasons listed below in the paragraph for computer system hardware. IPC manufacturers typically maintain better quality control than their traditional PC counterparts. They focus primarily on high component quality rather than cost to insure a high overall product quality. They also support their product lines longer than other computer manufactures. Most traditional PC manufacturers have about an eighteen-month turnover rate on their product lines. This means that it is impossible to purchase direct replacements for products this old. IPC manufacturers, on the other hand, typically have turnover rates of three years, or twice as long. They are also committed to providing excellent free technical support for their products. On small projects where the budget is limited, traditional desktop PCs can be used as long as they are placed in an environmentally controlled location, such as a heated and air-conditioned control room. When using traditional PCs, the life-cycle costs of more frequent upgrades should be factored into the total project costs.

4.3.2.3 Standard Products. Only manufacturers regularly engaged in the production of industrial computers should furnish such products. Where two or more units of the same type of equipment are required, they should be of the same manufacturer. This avoids the extra effort to support multiple manufacturers' equipment. All computer components should be certified to operate with the specified operating system software. For Microsoft operating systems, the components should be listed in Microsoft's hardware compatibility list.

4.3.2.4 Factory Assembly. When possible equipment should be completely factory assembled. This prevents possible labor disputes in the field about who installs and configures the hardware components.

4.3.2.5 Expandability. Because of the rapid changes in technology and especially new advancements in computer hardware, all hardware should be as expandable as possible. This includes extra physical space for archival devices such as tape backup units, or optical disk storage units, extra physical space for adding interface and controller cards, extra disk storage capacity, extra memory capacity, upgradability of video displays, and the addition of IPCs to the control system. The control system should be flexible enough to allow changes and additions after the system is installed.

4.3.2.6 Environmental Requirements. All computer equipment should be designed to operate without any degradation of performance throughout the following environmental requirements. Equipment should be designed to prevent the generation of electromagnetic and radio frequency interference and should comply with FCC Class B requirements both for emissions and susceptibility. Equipment should be designed for operation in ambient temperatures from 0 to 60 degrees Celsius and 5 to 90 percent relative humidity non-condensing (RHNC). Equipment should be designed to withstand shock of 10g, 3 axis and vibration of 1.5g, 3 axis.

4.3.2.7 Cabling. All cord-connected equipment should be furnished with 3-wire grounded cord and plug assemblies at least eight feet in length. Cables for transmission of digital signals and data between components of the system should be multiconductor, round and shielded with multi-pin Electronic Industries Association (EIA) standard connectors. Connectors should have metal hoods, gold plated contacts and screw or clip-type securing devices. Flat ribbon cables with crimp-on plastic body connectors should not be used except between devices in the same electronic enclosure. Cables should be extendable to long lengths to allow the use of centralized rack-mounted components in lieu of individual desktop or tower units.

4.3.2.8 Spare Parts. Except as stated below, at least one of each major component should be provided as spare. Examples include CPU cards, disk drives, video cards, mouse units, keyboard, network interface cards, network transceivers, network hubs, and so forth. In general, components that would significantly impact operations should be supplied with spares. Typically, this includes adapter cards, but not such components as video monitors. Video monitors can be replaced temporarily with any low-cost monitor until a failed unit can be repaired or replaced. Spares cannot be justified due to the current high cost of large monitors. Likewise, components that do not ordinarily fail, such as IPC chassis, do not need to be provided with spares. Printers, unless critical to operation, also do not need to be provided with spares. Consumables, such as toner cartridges, should be provided as spares to have on hand in case of model discontinuation.

4.3.2.9 Upgrade Frequency. Generally, IPCs used for lock and dam control should require upgrading less frequently than PCs used for other purposes, simply because they are designed to last longer. However, consideration should be given to developing an upgrade plan similar to many Information Management life cycle management plans. These plans typically call for upgrading all microcomputer (not PLC) hardware every five years. There are logical reasons for upgrading IPCs, even if everything is operating smoothly. Manufacturers discontinue support for old product lines. As components fail it becomes increasingly difficult to buy new hardware that is compatible with old versions of the operating system software. Likewise, new device drivers simply are not written for old hardware. When trying to support older hardware, a point of diminishing returns is reached making it almost a requirement to upgrade. Table 4-1 shows the recommended upgrade frequencies for IPCs and PLCs. Note that the frequencies listed are the maximum recommended and should be used strictly as a guideline. Depending on the type of hardware or software, the upgrade frequency may be lower or higher. The frequencies listed are for planned upgrades and not routine maintenance, such as replacement of failed or damaged components.

4.3.2.10 Power System – Uninterruptible Power Supplies. Clean, reliable power is perhaps the most important factor in assuring long life of a computer system. The simplest way to

achieve this is through the use of uninterruptible power supplies (UPS). Careful consideration should be given to designing the power supply for the computer system. Large harmonic currents caused by non-linear loads should be reduced with larger, grounded (neutral) conductors and with K-rated transformers suitable for non-linear electronic loads. Note that a UPS is not a harmonic eliminator, and that multiple harmonic generating devices connected to the UPS output could affect each other. The power system design should take into account the harmonic distortion caused by the UPS on its line side. UPS should be separately circuited. For computers centrally located a large, floor mount UPS may be suitable for providing backup power and surge protection. Several smaller floor mount UPS can also be used. For remote standalone computers, a small UPS should be provided. Units should be carefully sized to handle the power loads for all of the computer components, including the IPC chassis and all internal devices, as well as the video display monitor. Peripheral components, such as printers, modems, and network hubs (if serving non-critical IPCs), may or may not need to be provided with continuous power. Consideration should be given to connecting these devices to the UPS, however, to provide them with lightning and surge protection. Rack mounted UPS can be used for rack mounted computer equipment. Depending on the application, several rack-mounted units may be required because of their limited power capacity. It may be beneficial to use UPS that include communications capabilities. The UPS can be monitored and controlled with software through a communication link to the IPCs, or to another PC.

4.3.2.11 Power System – Surge Protection. All computer systems for lock and dam control should be provided with surge protection. As a minimum, voltage surge protection should be provided for each lighting panelboard and at each power distribution panel that feeds computer equipment. It is recommended that surge-protected power receptacles or plug-in strips also be used.

4.3.2.12 Power System – Grounding. Surge protection equipment is only as good as the grounding electrode system. A good grounding system should be installed in compliance with the National Electrical Code. Ground systems at old facilities that are retrofitted or rehabilitated for computer control should be upgraded to meet the needs of modern computer equipment.

4.3.2.13 Rack Mount versus Standalone Systems. For installations where several IPCs are grouped together in a single control room, rack mount systems may offer a better solution than standalone systems. The IPC chassis, power supply bay, drive bay, and CD-ROM bay can all be mounted in a single 19-inch equipment cabinet, located outside of the control room. Monitors, keyboards, and mouse units would be located in the control room and extended with special extender devices. This arrangement provides the ideal arrangement for upgrading, troubleshooting, and maintaining the IPC equipment because all of the major components are contained within the same enclosure. Also, work on the IPCs can be done without disturbing operators. Rack mounted equipment should not limit replacement or retrofit options since industrial computer manufacturers always provide components suitable for rack mounting in standard racks.

Description	Notes	Upgrade Frequency (years)
Control System		
Industrial Personal Computer and Network		
Chassis		8
Power Supply		8
Backplane		5
CPU Board		5
Memory		5
Fixed Drive	Hard Drive, for example	5
Removable Drive or Disk	CD-ROM, Zip, Floppy	5
Video Display Adapter		5
Network Interface Card		5
Keyboard		8
Mouse		8
Monitor		5
Network Hub		7
Network Router		7
Line Conditioner		8
Surge Suppressor		8
Uninterruptible Power Supply (UPS)		8
UPS Batteries		5
System Software		
Operating System Server Software		4
Operating System Workstation Software		4
MMI Software	Version upgrade only	4
PLC System		
Power Supply		15
I/O Rack		15
Processor		10
I/O Interface Module		15
Network Interface Module	Ethernet, for example	10
Fiber Interface Module		15
Digital I/O Module		15
Analog I/O Module		15
PLC System Programming		10
Sensors and Limit Switches		
Rotary Position Sensor		15
Inclinometer		15
Limit Switch		15
Water Level Sensor		15

Table 4-1 Recommended IPC and PLC Upgrade Frequencies

4.3.2.14 IPC Chassis. The chassis should be made of cold rolled steel to provide rigidity and structural integrity and to eliminate EMI emission and static discharge sensitivity. At least one filtered fan should be provided in the front of the chassis for positive air pressurization. This keeps airborne contaminants out of the chassis. A second filtered fan can usually be added for more extreme environments. Most traditional PCs have a single fan mounted on the power supply for cooling. Power supplies should be highly reliable industrial grade, sized to allow for expansion, and equipped with a filtered cooling fan. Other features should include: lockable front panel door to prevent unauthorized access, fixed disk drive shock mounts for protection against vibration, hold-down brackets to insure adapter cards remain firmly seated, and front and rear keyboard connectors. The chassis should be sized to accommodate the required number of slots as well as those required for future expansion (at least one of each type).

4.3.2.15 Processor. Microprocessor technology changes at a rapid pace. IPC manufacturers typically lag behind traditional PC manufacturers by a few months in their development cycle. The key to effective computer control systems is to design around the latest microprocessor technology so that the system is not obsolete by the time it is installed. Working with manufacturers during the design, it is possible to specify components that do not become available until the bid process. This is the optimum situation to guarantee the system is not obsolete, or only marginally obsolete, by the completion of the installation contract. While it may seem like overkill to utilize the fastest and latest microprocessors to control a lock and dam, there are two reasons that justify it. First, using the latest microprocessor insures forward mobility with technology. Incorporation of alternate input technologies, such as voice control, requires powerful processing capabilities. Graphic displays with video and animation also require fast processors. While these features are not currently found in graphic user interfaces (GUIs), it is only a matter of time before they are. These features can be implemented with little change if the computer control system is designed using high-speed computers. Second, utilizing the latest technology extends the lifetime of the computer system. Manufacturers do not support product lines forever. Maintenance and repair become a problem once the manufacturer ceases support. By designing around the latest products, the system lifetime is maximized.

4.3.2.16 Backplane. Most PCs sold today have a single active motherboard with slots for adapter cards. The CPU, memory, and controller circuits are installed on the same motherboard. The passive backplane found in IPCs has several key advantages over the traditional active motherboard based systems. The passive backplane consists almost entirely of adapter slots and has minimal on-board circuitry. It is mounted horizontally on the bottom of the IPC chassis, where the active motherboard in traditional PCs is mounted. This allows the CPU and controller card to be mounted vertically, allowing air circulation, critical to cooling, on both sides of the card. It also prevents the build-up of airborne contaminants on the card's components, thus helping to prevent overheating. The inherently modular aspect of the passive backplane approach makes it possible to achieve improved serviceability, low mean time to repair, simplified troubleshooting, quick problem isolation, and forward mobility with technology. With the passive backplane design, upgrading to a faster CPU is as simple as replacing a card.

4.3.2.17 Controller. The controller is a card that mounts vertically in the CPU slot of the backplane. The controller contains all, or most, of the control components for the IPC. Depending on the type of CPU used, the CPU may be included on the controller card or mounted separately on the backplane. Other components that may be integrated into the controller card include: memory, fixed disk controller, floppy drive controller, SCSI controller, video controller,

real time clock, serial ports, parallel ports, speaker controller, keyboard controller, and mouse controller. Depending on the model, many of these components require ribbon cables to connect to the actual device. Serial and parallel ports may require additional brackets to accommodate connectors. Because video capabilities continue to change, it is probably better to use controller cards that do not include on-board video controllers. Not only is it easier to update a separate video controller card, it also reduces the possibility of a video failure propagating through the controller card and damaging other components, forcing a complete replacement of the entire controller card.

4.3.2.18 Memory. The operating system and man-machine interface (MMI) software will determine the amount of required memory. Consideration should be given to providing the maximum possible amount of memory to insure optimum performance and to allow for future software upgrades. The IPC manufacturer should be consulted when specifying particular types of memory.

4.3.2.19 Storage Devices. There are new storage technologies emerging all the time. Magnetic storage is currently widely used, but the limitations of this technology will force development of new ones. It is important to consider these new technologies to insure forward mobility with technology and to maximize the lifetime of the system, while also avoiding the mistake of adopting unproven and short-lived technologies.

4.3.2.20 Hard Disk Drive (Fixed Drive). Hard disk drives are currently the storage technology of choice for most computer users. The cost per megabyte of storage has decreased dramatically. IPCs should be provided with hard drives sized large enough to accommodate the operating system, MMI software, and other application software required for control. Consideration should be given to future operating system upgrades and future application software upgrades. New versions of software are rarely smaller in size than old versions. Transfer speed is another consideration when selecting a hard drive. Older interfaces, such as SCSI, have traditionally provided the fastest transfer speeds, but other interfaces, such as EIDE and ATA are rapidly closing the speed gap.

4.3.2.21 Floppy Disk Drive. Floppy drives provide a convenient method of copying small files between non-networked PCs. Advances in floppy drive technology have provided drives that store many megabytes, yet are backward compatible with older, limited capacity, floppy disks. Again, consideration should be given to these new types of drives, especially because file sizes are quickly outgrowing the capacity of older style floppy disks.

4.3.2.22 CD-ROM Drive. Much commercial software is distributed on CD-ROM. Microsoft Windows NT Server, for example, is only available on CD-ROM. The reason for this is cost. It is much less expensive to write a CD than to write hundreds of floppies. It also makes it much more convenient to install the software. For these reasons CD-ROM drives should not be treated as optional and should always be provided with IPCs.

4.3.2.23 Tape Backup Drive. Unless a great deal of data logging is planned, tape backup drives are difficult to justify in IPC systems used for lock and dam control. Such systems should have more than one IPC networked together. Important data files such as PLC software or MMI screens and databases should be backed up to all IPC hard drives so that if one IPC fails, the files can be restored across the network from one of the functional IPCs. Important files should also

be backed up to removable disk and stored off-site in case of natural disaster or catastrophe. Operating system and application software can be restored from original CD-ROM discs. Consideration should be given to complete system rebuilds, that is reformatting and reinstallation of all software, in the event of regular system crashes. The district should have a plan in place for such an event.

4.3.2.24 Removable Disk Drive. This type of drive is growing in popularity and provides a convenient method of backing up large files for removal off-site. These drives come in internal and external versions. The external versions can interface to the IPC's parallel port or SCSI port. The parallel version is considerably slower, but offers more flexibility because most computers have parallel ports, but not all have SCSI ports. The entire external drive can easily be taken off-site so that the removable disk can be copied to or read from another computer. If removable disk drives of the same type and compatibility are available off-site, then it makes more sense to use an internal removable disk drive in the IPCs. Internal drives are faster and take up less space than external units.

4.3.2.25 Input Devices. Input devices include keyboards, mouse units, and touch screens. Other input technologies, such as voice, may be used in the near future.

4.3.2.26 Keyboard. Because of its widespread use, standard IBM AT keyboards should be used with IPCs. Small footprint versions may be used depending on console design. Custom-built consoles or racks with pullout drawers may be used to house keyboards. Protection against dust and liquid contaminants can be achieved using protective keyboard overlays.

4.3.2.27 Mouse. Mouse units are the preferred input devices for lock and dam control. Either a standard two-button Microsoft compatible mouse or a heavy-duty unit can be used. Considering the heavy 24 hour-per-day, 7 day-per-week use of an IPC, a mouse with no moving parts may be justifiable. Traditional mouse units are prone to clogging from dust and dirt and require regular cleaning for proper operation.

4.3.2.28 Touch Screen. Touch screens come in several varieties, including infrared, surface acoustic wave (SAW), and resistive types. Experience has shown that operators prefer the tactile feedback of a mouse to touch screens. Of the touch screens implemented for lock and dam control, the SAW type is less prone to false inputs. The infrared type touch screens are best used in applications that required a second acknowledgment for confirmation of each input. SAW type touch screens are much more forgiving due to their design. They require firm pressure applied to the screen before registering as an input.

4.3.2.29 Video Display System. The video display system consists of a CRT or LCD video monitor and a compatible video adapter.

4.3.2.29.1Video Display Monitor. There are two common types of video display monitors: cathode ray tube (CRT) and liquid crystal display (LCD). Advantages of CRT monitors are low cost, excellent picture quality, and wide availability in large sizes. Disadvantages of CRT monitors are excessive heat generation and large footprints. Experience has shown that CRT video monitors are prone to phosphor burn-in from extended continuous use. The same images are displayed on the screen and results in damage to the monitor. Newer monitors are less prone to this problem, however. CRT video monitors also generate a lot of heat, require a large

footprint, and consume a lot of power. They also are difficult to view in bright sunlight without special overlay filters. Recent advances in LCD flat-screen video monitors are making them an appealing alternative to CRT types. Advantages of LCD monitors are low heat generation, small footprint, and light weight. LCD flat-screens are available in large sizes, high resolutions, and wide viewing angles. Power consumption is typically less than half that of CRT monitors and heat generation is correspondingly less. Their flat design, small footprint, light weight, wide viewing angle, and brightness are ideal for lock and dam control. Note, however, that there are many flat screen display manufacturers and that not all models are equivalent. The primary characteristics to look for are high resolution and wide viewing angles typically found in CRT monitors. The big disadvantage of LCD monitors is their high price. Large flat screen displays are very expensive compared to CRT displays. In the long run, however, flat screens may pay for themselves because of their improved design.

4.3.2.29.2 Video Adapter. A suitable video display adapter, compatible with the video display monitor, should be provided separate from the IPC controller card. The adapter should provide resolution and colors compatible with or better than the video display monitor's. Video memory for 24-bit color (65,536 colors) can be calculated as follows:

$$\text{Bytes Required} = \frac{X \text{ pixels} \times Y \text{ pixels} \times 24 \text{ bits per pixel}}{8 \text{ bits per byte}}$$

Round up to the next multiple of 2 megabytes.

4.3.2.30 Sound System. Sound should be considered as a form of feedback to the operator. While not absolutely necessary for control, it can enhance the user interface by augmenting visual feedback with audio information, such as voice acknowledgment or warning alarms. A sound system should be provided to insure forward mobility with technology.

4.3.2.30.1 Sound Card. The sound card should be from a reputable manufacturer widely used by computer users. The card should have at least 16-bit stereo sound with playback rates from 5 kHz to 44.1 kHz minimum, be capable of recording using microphone, stereo line-in, and CD-audio inputs, and include its own output power amplifier.

4.3.2.30.2 Speakers. Stereo speakers should be provided to match the output power from the sound card, and have a frequency range of at least 95 Hz to 16 kHz.

4.3.2.31 Printing. Printers are convenient during the development and testing stages of a new control system, but can also be used for data logging and vessel report generation during normal use. Consideration should be given to using networked printers so that any IPC on the network can print to all of the printers. This provides the most flexible printing arrangement. With Windows NT, printers can be connected directly to one IPC's parallel port and shared for all IPCs to use. Alternatively, and perhaps the more flexible arrangement, printers can be provided with their own network interface card so that they act as an addressed network device. This

allows IPCs to be shut down without disrupting printing capability.

4.3.2.31.1 Black and White Printers. A black and white laser printer should be used for normal printing. It should be a printer intended for heavy business use to insure high quality. Important features include a fast print speed and sufficient memory to print high-resolution graphics. The printer should be capable of accepting a network interface card compatible with the network, but should also include a compatible parallel interface. The printer should be provided with large-capacity (500 sheets, or one ream) trays for holding paper.

4.3.2.31.2 Color Printers. Currently, the high cost of color laser printers makes it difficult to justify them for use at a lock and dam. An inexpensive alternative is the color ink-jet printer. This type of color printer is acceptable for the occasional need to print color, such as printing MMI screen images. Print speed is not as much of a concern as for black and white laser printers since the color printer will be used much less frequently. Enough memory should be provided to allow printing of high-resolution color graphic images. As with the black and white laser printer, it should be capable of accepting a network interface card compatible with the network, but should also include a compatible parallel interface.

4.3.3 Networks.

4.3.3.1 Network Fundamentals. It is important to review the fundamentals of networks before discussing their application to lock and dam control systems. A network is a group of two or more computer systems linked together. There are many types of computer networks, including local-area networks (LANs) and wide-area networks (WANs). With LANs the computers are geographically close together (that is, in the same building or group of buildings). With WANs the computers are farther apart and are connected by telephone lines or radio waves. In addition to these types, the following characteristics are also used to categorize different types of networks.

4.3.3.2 Topology. The geometric arrangement of a computer system. See Figure 4-4 for the three principal topologies used in LANs.

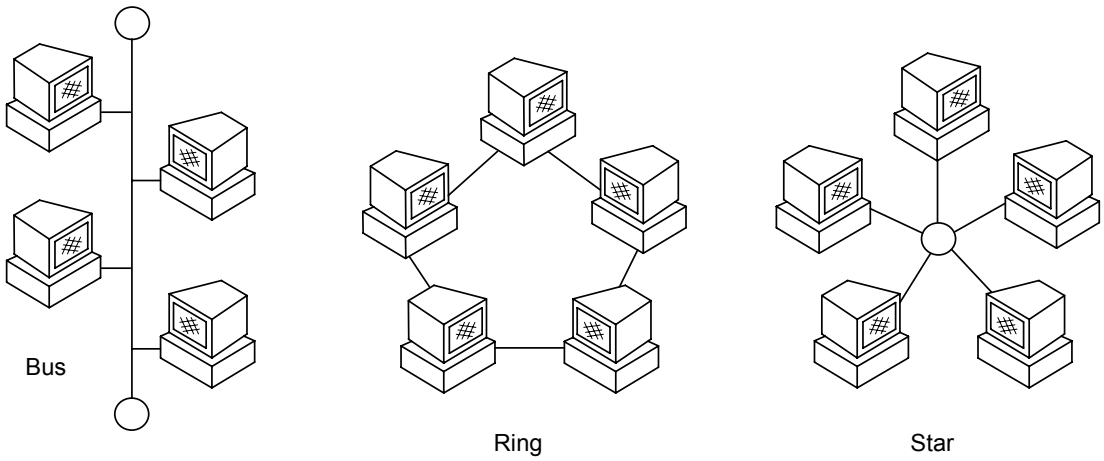

Figure 4-4 Principal LAN Topologies

- Bus Topology: All devices are connected to a central cable, called a bus or backbone. Bus networks are relatively inexpensive and easy to install. Ethernet systems use a bus topology.

- Ring Topology: All devices are connected to one another in the shape of a closed loop, so that each device is connected directly to two other devices, one on either side of it. Ring topologies are relatively expensive and difficult to install, but they offer high bandwidth and can span large distances.

- Star Topology: All devices are connected to a central hub. Star networks are relatively easy to install and manage, but bottlenecks can occur because all data must pass through the hub.

Variations on these topologies exist. The bus and star topologies, for example, can be combined to form a hybrid LAN. This arrangement is useful where several remote IPCs need to be networked to a central LAN, such as in a control room. The remote IPCs connect back in a star configuration to a network hub that is connected to a local bus. See Figure 4-5 for an example of a hybrid LAN. This topology has worked well at Locks No. 27 on the Mississippi River.

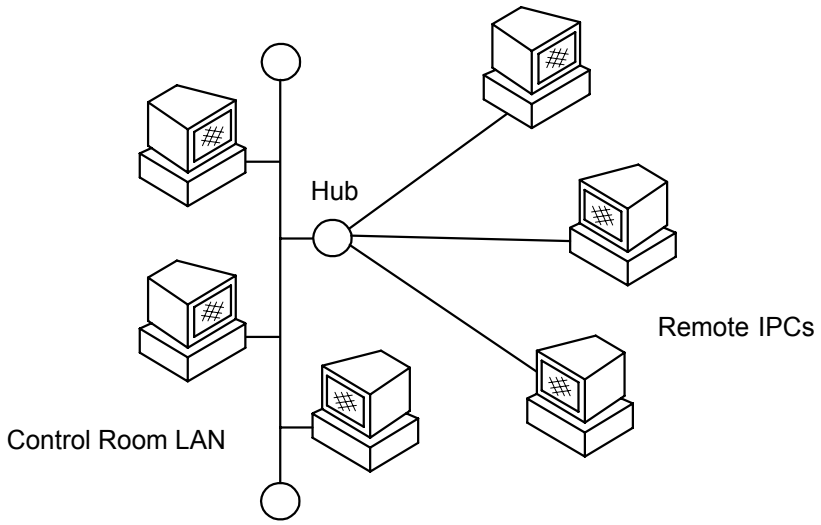

Figure 4-5 Hybrid Bus and Star LAN Topology

4.3.3.3 Protocol. The protocol defines a common set of rules and signals that computers on the network use to communicate. One of the most popular and widely used protocols for LANs is called Ethernet. Ethernet was developed by Xerox Corporation in cooperation with DEC and Intel in 1976. Ethernet supports a bus topology and supports data transfer rates of 10 Megabits per second (Mbps). The Ethernet specification served as the basis for the IEEE 802.3 standard, which specifies the physical and lower software layers. Different physical layer versions include 10BASE-2 (ThinNet coaxial cable), 10BASE-5 (ThickNet coaxial cable), 10BASE-T (twisted-pair wires), and 10BASE-FL (fiber optic cable). A new version of Ethernet, called Fast Ethernet, supports data transfer rates up to 100 Mbps. The IEEE standard for Fast Ethernet is 802.3u. Different physical layer versions include 100BASE-TX (two pairs of high quality twisted-pair wires), 100BASE-T4 (four pairs of normal-quality twisted-pair wires), and 100BASE-FX (fiber optic cable). An even newer standard, called Gigabit Ethernet, supports data rates of 1 Gigabit per second (Gbps). There are two IEEE standards for Gigabit Ethernet: 802.3z for fiber and

802.3ab for copper wires. Different physical layer versions include 1000BASE-SX, 1000BASE-LX, and 1000BASE-T.

4.3.3.4 Architecture. Networks can be broadly classified as using either a peer-to-peer or client/server architecture.

4.3.3.4.1 In a peer-to-peer network each workstation has equivalent capabilities and responsibilities. Peer-to-peer networks are generally simpler and less expensive, but they do not offer the same performance under heavy loads.

4.3.3.4.2 In a client-server network each computer or process on the network is either a client or a server. Servers are powerful computers or processes dedicated to managing disk drivers (file servers), printers (print servers), or network traffic (network servers). Clients are PCs or workstations on which users run applications. Clients rely on servers for resources, such as files, devices, and even processing power.

4.3.3.5 Network Considerations for Lock and Dam Control. The same considerations apply to lock and dam networks that apply to any sizeable network. They include reliability, availability of management and troubleshooting tools, scalability, and cost.

4.3.3.5.1 Reliability. Highly reliable networks are critical to the success of a network at a lock and dam, so ease of installation and support are primary considerations in the choice of network technology. Ethernet networks are by far the most widely used, representing more than 83 percent of all installed networks by the end of 1996. Because of this popularity, equipment and wiring systems have become increasingly reliable. They are also relatively simple to understand and administer.

4.3.3.5.2 Availability Of Management And Troubleshooting Tools. Management tools for Ethernet, made possible by widespread adoption of management standards including Simple Network Management Protocol (SNMP) and its successors, allow an administrator to view the status of all desktops and network elements, including redundant elements, from a central station. Ethernet troubleshooting tools span a range of capabilities, from simple link indicator lights to sophisticated network analyzers. As a result of Ethernet's popularity, large numbers of people have been trained on its installation, maintenance, and troubleshooting.

4.3.3.5.3 Scalability. The Fast Ethernet standard, approved in1995, established Ethernet as a scalable technology. Now, the development of Gigabit Ethernet extends the scalability of Ethernet even further. Independent market research has indicated a strong interest among network users in adopting Gigabit Ethernet technology, specifically Fast Ethernet hubs and switches with Gigabit Ethernet uplinks, Gigabit Ethernet switches and repeaters, and Gigabit Ethernet server network interface cards (NICs).

4.3.3.5.4 Cost. Prices for Fast Ethernet hubs, switches, and NICs have decreased rapidly overall. Although initially expensive, Gigabit Ethernet technology is expected to track the rapid decrease in price of Fast Ethernet technology.

4.3.3.6 Network Design for Lock and Dam Control. To design a reliable network, it is important to understand some of the limitations of the different technologies available and to decide which features are required for the particular application. An important design

consideration for a lock and dam network is the size of the facility. If the lock and dam is controlled from a single point, with no plans to add control points away from the main control room, then distance is not a problem. However, for distributed control, in which control points may be hundreds, or thousands, of feet apart, distance becomes a critical factor in the design of the network.

Table 4-2 shows that Fast Ethernet and Gigabit Ethernet may only be implemented at large facilities with widely separate control points using fiber optic cable. In most instances, Fast Ethernet will also require fiber optic cable between distant control points. For 183 and 366 meter (600 and 1200 foot) locks control points located at each end of the lock exceeds the maximum network distance for copper wiring for all speeds except 10 Mbps Ethernet.

Table 4-2 Rules for Maximum Network Distance

	Ethernet 10BASE-T	**Fast Ethernet 100BASE-T**	**Gigabit Ethernet 1000BASE-X**
Data Rate	10 Mbps	100 Mbps	1 Gbps
Cat 5 Unshielded Twisted Pair	100 m (min)	100 m	100 m
Shielded Twisted Pair/Coax	500 m	100 m	25 m
Multi-mode Fiber	2 km	412 m (half duplex) 2 km (full duplex)	500 m
Single-mode Fiber	25 km	20 km	3 km

4.3.3.6.1 Noise. Another important consideration in network design is noise from radio and electromagnetic interference. Locks and dams can be extremely noisy environments, especially with large motors, variable speed drives, and so forth. Lightning and surge protection is another important consideration. Fiber is naturally suited to protect against noise, lightning, and surges because it is non-conductive, using glass as the media of transmission instead of copper.

4.3.3.6.2 Operating Plan. During design of the network an operating plan must be developed, a network topology based on the operating plan must be selected, a suitable network protocol must be selected, and the network architecture must be selected. The operating plan includes selection of operating locations, number of control points at each location, and primary versus secondary control points.

4.3.3.6.3 Operating Locations. The operating locations may include a central control room with backup control points situated at strategic locations at opposite ends of the lock chambers. At each of these control points the total number of operating workstations must be determined. Typically, primary control points, or those that are used for normal operation, may have two

workstations in case one fails. Secondary, or backup, operating points may have only one workstation depending on how critical and how frequently that location is used.

4.3.3.6.4 Operating Points. Using the maximum network distances as a guideline, the operating points should be grouped by distance of separation. Those that are within 100 meters of each other should be considered local, while those beyond 100 meters should be considered remote. One operating point should be selected as the primary control point if there is no central operating location. The most logical network topology should become clear naturally from this analysis. In most instances, the topology will be the bus topology, star topology, or a combination of both.

4.3.3.6.5 Protocol Selection. Next, the network protocol must be selected. Ethernet is the protocol of choice, but consideration should be given to other protocols depending on the application. Ethernet has several shortcomings of which network designers should be aware. Foremost is the fact that it is a non-deterministic protocol. This means there is no guaranteed time in which communication between two or more nodes has been completed. This is probably not a problem for lock and dam control, but some industrial applications require determinicity to insure control of critical processes. The designer should keep this in mind when designing the network, especially since most programmable logic control (PLC) systems are deterministic. Reflective Memory Network is quickly becoming the standard for determinicity protocols.

4.3.3.6.6 Architecture Selection. Finally, the network architecture must be selected. The client-server model is the architecture of choice. There are applications where a peer-to-peer architecture is suitable, such as when only two or three IPCs are networked, but the client-server architecture provides several key benefits. One benefit is simple network administration. The server provides user authentication so that a common user profile can be used for all users. A common user profile insures that all IPCs present the same interface for each user who is configured to use the profile. This means that if the user makes changes while logged in or accidentally deletes icons or reconfigures the system, it reverts back to the original configuration the next time they log in. Another benefit is the ability of clients to access shared resources on the server, such as databases, printers, or modems. A third benefit of client-server systems is scalability. They can be scaled horizontally or vertically. Horizontal scaling means adding or removing client workstations with only a slight performance impact. Vertical scaling means migrating to a larger and faster server machine or multi-servers.

4.3.3.7 Design Details. Once the network is designed, the details can be completed. This includes selection of hardware and software (operating system).

4.3.3.7.1 Network Routers. Routers are used for controlling communications between two locations. Routers are typically not used in lock and dam networks. They are used, however, to provide control communication from the lock and dam back to the district office for the lock performance monitoring system (also known as OMNI system). Routers may have application in remote control of locks and dams. The network should be designed keeping the option of remote control in mind.

4.3.3.7.2 Network Hubs. A hub is the center of a star topology network system. Hubs can be used to convert between different physical network media, such as fiber to twisted pair and vice versa.

4.3.3.7.3 Network Repeaters. Repeaters are used to extend the length, topology, or interconnectivity of the physical network medium beyond the limits imposed by a single segment. They perform the basic actions of restoring signal amplitude, waveform, and timing applied to normal data and collision signals. The designer should be aware that there are limitations in extending networks using repeaters and plan the network accordingly. For example, repeaters add delay when re-transmitting communication signals. The overall delay for all repeaters in a chain must not exceed the acceptable limit.

4.3.3.7.4 Network Interface Cards. Network interface cards (NICs) provide the connection between the computer and network. NICs are available in many varieties for connection to ThinNet, ThickNet, twisted pair, and fiber networks. Consideration should be given to using the type of NIC best suited for direct connection to the network. For example, fiber NICs should be used for direct connection to fiber media, without converting to a different media using a transceiver. The drawback to this approach is that more than one type of NIC is required for the computers attached to the network. The advantage of this approach is that fewer components are required and the system reliability consequently should be higher.

4.3.3.7.5 Network Transceivers. Network transceivers provide a single physical connection between standard Ethernet and Ethernet communication equipment. Transceivers are typically used to convert between media types. For example, a 4-port hub with ThinNet network connection and AUI (attachment unit interface) ports may be available while the same unit with fiber ports is not. Fiber can be connected to the AUI ports using fiber-to-AUI transceivers. This is an important consideration in network design because communication equipment is not always available in the desired configuration and port types.

4.3.3.7.6 Dial-Up Networking. Dial-up networking is becoming increasingly popular. A dial-up network router is typically attached to the LAN and is provided with analog telephone ports. The router allows remote users to dial into the network and access it off-site for software maintenance and troubleshooting. The router should support TCP/IP, IPX routing, PPP, and Multilink PPP (MP) protocols. It should also provide user authentication for security management and firewall technology as an option. Proper Corps of Engineers security measures should be implemented and coordinated with Information Management and District Security offices.

4.3.3.7.7 Wireless Networking. For rehabilitated locks and dams, as well as new facilities, wireless LANs may provide an excellent alternative or supplement to wired versions. For control points that are very infrequently used for operation, for example, it may make more sense economically to operate from that location with a notebook computer equipped with a wireless Ethernet card. Such devices can interface with existing Ethernet LANs and operate at high data rates up to 3 Mbps using frequency hopping spread spectrum technology at 2.4 GHz. The range of wireless LAN devices varies from one to several kilometers(3,000 feet to several miles) depending on the antenna used. Wireless LANs also allow mobility and roaming; gates can be operated while positioned at the gate. This ability to operate equipment from anywhere can be invaluable for troubleshooting and maintenance.

4.3.3.8 Cabling. Good network cabling is essential to a reliable network. There are essentially three types of cables used for transmission in a network: coaxial cable, twisted-pair cable, and fiber optic cable.

4.3.3.8.1 Coaxial Cable. A type of wire that consists of a center wire surrounded by insulation and then a grounded shield of braided wire. The shield minimizes electrical and radio frequency interference. 10BASE-2 (also called ThinNet) is one adaptation of the IEEE 802.3 Ethernet standard and uses 50 ohm coaxial cable (RG-58 A/U) with maximum lengths of 185 meters. This cable is thinner and more flexible than that used for the original 10BASE-5 (also called ThickNet) Ethernet cabling standard and is both less expensive and easier to install. The maximum cable length in 10BASE-5 is 500 meters. Cables in the 10BASE-2 system connect with BNC connectors. Network devices connect to the network with a T-connector so that cables can connect to other devices. Any unused connection must have a 50 ohm terminator.

4.3.3.8.2 AUI. Short for Attachment Unit Interface and is part of the Ethernet standard that specifies how a cable is to be connected to an Ethernet card. AUI specifies that a coaxial cable connects to a transceiver that plugs into a 15-pin socket on the network interface card.

4.3.3.8.3 Twisted-Pair Cable. A type of cable that consists of two independently insulated wires twisted around one another. One wire carries the signal while the other wire is grounded and absorbs signal interference. Twisted-pair cable is the least expensive type of LAN cable. 10BASE-T is one adaptation of the IEEE 802.3 Ethernet standard and uses a twisted-pair cable with a maximum length of 100 meters. 100BASE-T (also called Fast Ethernet) is another adaptation of the Ethernet standard and is ten times faster than 10BASE-T. Cables in both systems connect with RJ-45 connectors. Star topologies are common in 10BASE-T and 100BASE-T systems.

4.3.3.8.4 Fiber Optic Cable. A type of cable that uses glass or plastic fibers to transmit data. A fiber optic cable consists of a bundle of glass threads, each of which is capable of transmitting messages at close to the speed of light. Fiber optic cables have several advantages over traditional copper communication lines: fiber optic cables have a much greater bandwidth which means that they can carry more data, fiber optic cables are less susceptible to electromagnetic interference, and fiber optic cables are much thinner and lighter than copper wires. The main disadvantage of fiber optics is that the cables are expensive to install. There are two basic types of fiber: multimode and single mode. Multimode fibers have a large core (25 to 300 μm) and permit nonaxial light rays or modes to propagate through the core. Single mode fibers have a small core (5 to 10 μm) and allow only a single light ray or mode to be transmitted through the core. This virtually eliminates any distortion due to the light pulses overlapping as in multimode fiber. Multimode fiber is more commonly used in small LANs while single mode fiber, because of its higher capacity and capability, is used for long distance transmission. Telephone companies typically use single mode fiber because of its ability to transmit long distances without the need for repeaters. There are a variety of connector types for fiber optic cable. Two common ones are ST and SMA. ST connectors are metal with a “straight tip” and are the preferred type. They join by pushing and twisting. SMA (Sub Miniature Assembly) connectors are used with multimode fiber and are screw-on type. Both types of connectors are available with metal, plastic, ceramic, and glass tips.

4.3.4 Motor Control Centers. The demarcation point between the PLC/IPC computerized control system and the traditional electrical distribution and control system is the motor control center, or in some cases a 480-volt switchboard type motor controller enclosure. With new lock construction, or rehabbed lock electrical distribution and control systems, consideration should be given to using standard 90-inch off-the-shelf motor control center construction. This type of

construction allows for easy future additions or changes to the distribution system. It also allows monitoring and control of the power distribution equipment contained within the MCC. Programmable Logic Controllers, “intelligent” circuit breakers, network lighting panels, automatic transfer switches, variable speed drives, and “smart” relays and motor starters are just some of the control features available with standard MCC construction. As with any electrical component there are high quality and low budget MCC components and it will take solid specifications for a low bid contractor to provide quality components throughout the MCC system. Traditional guide specifications are a good place to start preparing plans and specifications, but many of the features mentioned above and herein are not included in the guide specifications. Therefore, a designer must pay particular attention to the needs of the lock control system when designing the MCC system. This is not intended to be a design document for specifying motor control centers, but rather guidance for the designer when designing MCC systems. Following are some general guidelines for this effort but the designer will be responsible for determining the features necessary for a particular system.

4.3.4.1 Number, Size, and Location. Unlike smaller, less costly PLC I/O racks, redundancy in MCC applications comes with a high price. However, the addition of extra vertical structures and empty buckets allows for future expansion as the number of loads increase. For traditional locks of medium 183 m x 33.5 m (600 ft x 110 ft) to large 366 m x 33.5 m (1200 ft x 110 ft) size, a four corner MCC arrangement, with perhaps a main distribution MCC or switchboard, will serve the project well. Most electrical loads can be fed from one of four MCCs located near the four miter gates. Some older and/or smaller locks may require only one or two MCCs or 480-volt switchboards to handle control and distribute power to all lock loads. When designing MCC systems for new lock construction, a designer should first consider a four-corner arrangement. Most new facilities can economically support such an arrangement and most loads can be fed from one of four corners without significant over-sizing of conductors to account for voltage drop. Loads located on the dam can usually be served from standalone 480-volt gate controllers and/or distribution panels. When rehabbing existing projects it may be economical to install new MCCs in the same locations as the existing electrical distribution gear to be removed to take advantage of existing raceways or other features of the project. However, when considering expensive lock closure time, it may actually be more economical to place new motor control centers in different locations to facilitate installation and pulling of cables prior to lock closure. Rehabbed lock and dam projects may not always require the same number of new MCC structures as the original construction. Loads are usually added, changed, or moved on the system creating a need for more MCC capacity on a structure. Existing switchboards on old projects may have been overloaded over the years, and a designer may want to distribute the loads differently with a new MCC arrangement. After grouping all electrical loads by MCC location, ampacity, duty cycle, and diversity factor, load factor calculations should be done to determine the rating of the main circuit breaker and horizontal bus at each MCC. Consideration should always be given to future expansion when making final determination of MCC ampacity ratings. Following this determination, the designer should perform short circuit, motor start, and coordination calculations to determine AIC ratings and circuit breaker types and settings. When rehabbing a project, if the existing MCCs or switchboards are located in a building or control house it is a good idea to locate the new MCCs in such protected areas. Often there is a location in the control house where a new MCC can be located prior to removing the existing gear during lock closure. This decision goes beyond the individual designer although they will have a big part in providing all the information for making such a decision. The more construction activities that are moved outside the lock closure window, the better chance the contractor will have of completing the

work on time and reopening the lock on schedule. On construction of a new lock, the electrical designer should lobby for protected areas to install MCCs. These areas should have easy access to gallery cable tray systems or lock wall conduit banks, sufficient access for maintenance, and elevation out of flood plains if possible.

4.3.4.2 Distribution Arrangement. Electrical distribution to remote MCCs will vary by project with no one arrangement clearly better than the rest. After locating and sizing the lock motor control centers, the designer must size and locate feeders to each MCC unit. This effort will require ampacity, voltage drop, and future expansion calculations. Designers should always provide alternate feeders to each MCC to continue power in the event of feeder failure. Redundant interlocked circuit breakers should be provided at each MCC to facilitate isolation of the two feeders. In a four corner arrangement, consider providing a main MCC or 480-volt switchboard for distributing redundant feeders to each MCC. At facilities with one or two MCCs, consider providing redundant feeders and control circuits to loads located at significant distances from the MCCs.

4.3.4.3 Motor Starters. Appropriately sized starters should be provided for each 480-volt motor load on the project. Starters should be provided with sufficient auxiliary contacts to provide both hardwired and PLC feedback. It is always a good idea to have extra contacts for future use. Overload heaters should be provided with auxiliary contacts for input to the PLC system. This will provide enhanced remote trouble-shooting capabilities. Solid-state motor starters with PLC network connections are also good considerations for critical motors. While the primary means of energizing motor starters will be the PLC input/output system, it is a good idea to provide means of energizing the starters at the MCC. This can be via simple “deadman” type pushbuttons that can be de-energized when the PLC and minimal hardwired control systems are completely functional. When using a hydraulic system these MCC pushbuttons should be accompanied by similar pushbuttons for energizing hydraulic solenoids. By doing this the designer provides a way for the general contractor, during construction, to “bump” motors and cylinders for shaft alignment, cylinder attachment, clevis pin attachment, shim and key installation and so forth. This will relieve the system integrator of the burden of providing untested solid state controls prior to actual gate operation. This will also provide the system integrator with opportunities to check transducer signals and feedback devices without the responsibility of operating the equipment.

4.3.4.4 Control Relays. In general, motor starters should be provided with pilot control relays to interface them with the PLC I/O cards. While some PLC isolated output cards are rated for enough current to energize smaller starters, larger starters will require pilot relays. Pilot relays provide a way to isolate the PLC system from starters and potential damage from 480-volt system faults.

4.3.4.5 Variable Speed Drives. Mechanical loads that require soft starting, multiple speeds, or ramp up/ramp down features, warrant consideration for a variable speed drive. This could be a DC drive or a variable frequency AC drive. Traditionally, DC drives have been used because they provide much greater control of motor speed and torque. Varying the voltage changes the speed and inversely changes the torque of a DC motor in a linear manner. In contrast, AC drives provide very fine control of speed with varying or constant torque. In addition, AC drives can be supplied with the inherent feature of an across-the-line bypass contactor in the event of solid state inverter failure. Therefore, when specifying variable speed drives, first consideration should be given to an AC adjustable frequency drive (AFD) with either constant or varying torque. It is a good idea

to require that the AFD be of the same manufacturer as the MCC. Large drives that do not fit in MCC type construction will require free-standing enclosures to house them. Space is an important requirement and a designer should consider that an “engineered” drive occupies significantly more space than the inverter itself. An engineered drive consists of the following features.

4.3.4.5.1 Isolated Bypass. Except in cases where emergency across-the-line starting will damage mechanical or structural equipment, AFDs should be provided with an isolated bypass, across-the-line contactor. The AFD should include full controls, accessible from the PLC system, for switching to the inverter-bypass starting mode. Control features and/or operational procedures that will require special consideration in order to start the load in this fashion should be determined. Such considerations should be programmed in the PLC and/or AFD controller. These details should be well covered within the specifications in order to insure proper coordination by the AFD manufacturer and the system integrator.

4.3.4.5.2 Network Communications. The AFD should be provided with means to communicate digitally via serial interface directly with the PLC processor. This networking capability should be an inherent feature of the drive and will require the AFD to be of the same manufacturer as the PLC system. This may limit the number of PLC manufacturers who can supply the system, but it is a necessary requirement when providing a reliable coordinated PLC/AFD system. The network communication should provide all status and diagnostics of the drive to the PLC system for remote trouble-shooting capability. Specifying the network communication speed is also a good way of specifying a higher quality product.

4.3.4.5.3 Hardwired Stop Override. The AFD should be provided with a means of stopping the drive independent of the PLC control system. Activation of this override should come from the lock hardwired emergency stop system. Indication of the status of the stop override should be available on the PLC network.

4.3.4.5.4 Dynamic Braking. All AFD systems require dynamic braking of the load. Gates and bridges that are lowered by gravity require excessive dynamic braking to control the speed of the falling load with the electrical-magnetic braking torque of the motor. Manufacturers should be consulted to calculate the exact amount of dynamic braking required for the system. A conservative approach to such calculations will prolong the life of the resistor banks and possibly the inverter itself.

4.3.4.5.5 Isolation Transformer. All AFDs reflect harmonics back to the power distribution system. Such harmonics can damage transformer neutrals as well as affect other digital switching loads. For this reason an appropriately sized K-factor rated isolation transformer should be provided with each AFD. The designer should consult the manufacturer of the AFD to determine the exact size and ratings of the isolation transformer.

4.3.4.6 Lighting Panels. While lighting panels can be located outside the motor control center structure, the purpose of discussing them in this document is the possibility of connecting them to the PLC/IPC control network. Remote switching and monitoring of branch circuit breakers is a very useful tool for facility power management. Energizing lighting circuits via the PLC network, without contactors and extra wiring, is a feature that should be considered when laying out a lock and dam control system. Such control can reduce installation and maintenance costs, aid in trouble shooting, and reduce energy consumption by using zone lighting with near unlimited

capabilities.

4.3.4.7 Power Monitoring Equipment. Switchboards and motor control centers can be provided with equipment for monitoring the status of electrical power, i.e. current, voltage, kilowatts, phase imbalance, loss of phase, and frequency. Remote switching and monitoring of power circuit breakers is also possible with such equipment. On less busy projects this may not be cost effective. The remote trouble shooting benefits for critical or remotely operated locks will likely justify the additional costs.

4.3.4.8 PLC Equipment. It is often convenient to install PLC I/O racks in motor control centers. This allows MCC starter buckets to be factory prewired to I/O cards which usually results in a cleaner installation.

4.3.4.9 Automatic Transfer Switches. Most locks have diesel driven standby generators to provide power during utility outages. The generator is usually tied to the lock main distribution bus with a transfer switch or interlocked circuit breakers. When building a new lock or replacing an existing lock electrical distribution system, consideration should be given to using an automatic transfer switch for transferring power from the normal utility source to the standby generator unit and retransfer when utility power is restored. Most ATSs can be furnished in motor control center type construction with digital communication ports for incorporation in the PLC control system for alerting the processor if the facility is on normal or standby power. This feature should cause the designer to consider requiring that the ATS be of the same manufacturer as the PLC system. By doing this the following control features can be programmed.

4.3.4.9.1 Loss of utility power usually cannot be anticipated. However, when utility power has been restored the PLC can prevent the ATS from switching back to the normal source until the operator has completed a lockage and is ready for the power to be interrupted again. This can save unnecessary wear and strain on the machinery. The PLC can also perform orderly shutdowns if necessary before transferring power back to the utility.

4.3.4.9.2 Often generators are not sized to handle as much load as the utility service. To relieve the load when operating on generator the PLC can stagger start motors, turn off non-critical lights, limit use of air compressors, and perform other load shedding procedures.

4.3.4.9.3 Operators for remotely operated locks may not know that power has been interrupted or that the lock is operating on generator. Such information, available by PLC communication with an ATS, could be useful in contacting the local utility for repair to the incoming service.

4.3.5 Software. Because most general contractors do not have the expertise to install and configure IPC and PLC networks, a system integrator should be used for this purpose. A system integrator is a company that regularly designs, installs, programs, and provides start-up and maintenance services for commercial/industrial control and computer systems. The successful implementation of a computerized control system depends largely on the capabilities of the system integrator. It also depends on the capabilities and support of the engineers responsible for the control system after it is installed. Few control systems are perfect immediately after they are installed. Most require “tweaking” to incorporate missing features or to adjust parameters that were not defined during testing and start-up. On lock and dam applications, often after the project is operating the lock personnel will request some changes as they become accustomed to the

system. There are three major software components in a computerized lock and dam control system: operating system software, PLC software, and MMI software.

4.3.5.1 Operating system software. The operating system is software that every computer must have to run other applications. It performs basic tasks, such as recognizing input from the keyboard or mouse, sending output to the display screen, keeping track of files and directories on the disk, and controlling peripheral devices such as modems and printers. Operating systems provide a software platform on top of which other programs, called applications, can run. The application programs are written to run on a particular operating system. The choice of operating system determines which applications can be run.

4.3.5.1.1 There are many different operating systems, including DOS, Windows, OS/2, and Unix. In the United States Microsoft Windows NT is becoming the preferred operating system for industrial control. Many MMI software packages available are written to run under Windows NT. Windows NT has built-in support for networking. This means that third-party networking software is not required. Windows NT is the only software required to fully implement the network.

4.3.5.1.2 Windows NT comes in two versions: Windows NT Server and Windows NT Workstation. The Workstation version is also known as the client software. Depending on the facility, more than one server may be used. A domain network model should be used when planning the network. A domain name should be chosen for the network and all users should be authenticated for this domain. For networks with more than one server, one should be configured as the primary domain controller and a second one should be configured as a backup domain controller. Using this approach, the backup controller automatically assumes the responsibilities of the primary controller if the primary shuts down for any reason.

4.3.5.1.3 The designer should work closely with the system integrator during initial configuration of the operating system and network to set up user accounts and passwords. Since operating computers typically are used 24 hours a day seven days a week, a single operator account should be used so that all shifts use the same account and password. Administrator accounts should be set up for system administrators or engineers who administer the computers and network.

4.3.5.2 PLC Programming Software. The PLC processor programming software should be as provided by the PLC manufacturer. It may be a third party product of which the PLC manufacturer OEMs or recommends in its written literature. The PLC programming software should have provisions for configuring I/O rack addresses, simulating program execution for debugging, and downloading to the PLC processor. The programming software should conform to part 3 of IEC 1131, the standard for PLC programming languages, should operate on a Microsoft Windows NT platform, and should include the following editors:

4.3.5.2.1 Function Block Diagram. This editor depicts process data flow suited for discrete and continuous control application functions and should include predefined elementary function blocks as well as user-defined function blocks. Language written in other editors, as listed below, can be nested within the Function Block Diagram. In FBD, control sequences are programmed as blocks which are “wired” together in a manner resembling a control circuit.

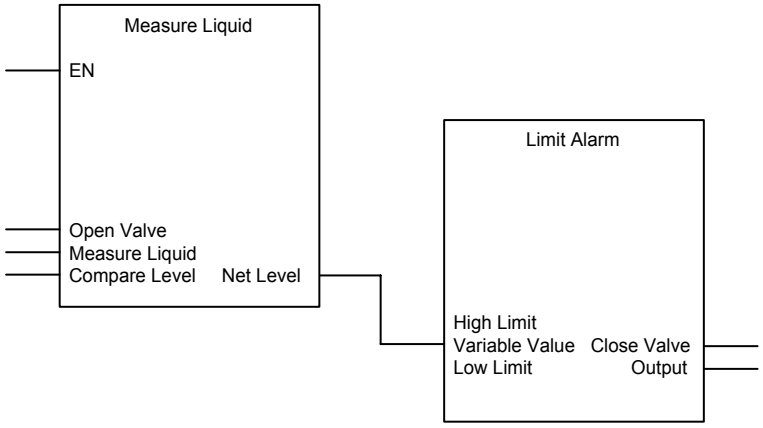

4.3.5.2.2 Ladder Diagram. This language allows programming in the familiar left to right contact and coil arrangement in an order that is familiar to most electricians and maintenance personnel. The ladder logic editor should allow the use of other editors such as Function Block and Structured Text to be incorporated into the ladder programming. This will simplify the programming as electricians and maintenance personnel will not have to be familiar with the complex logic of the other editors. The Function Block or Structured Text editors simply perform predetermined logic within the body of the ladder diagram. These can be grouped in subroutines to simplify the appearance of traditional ladder logic.

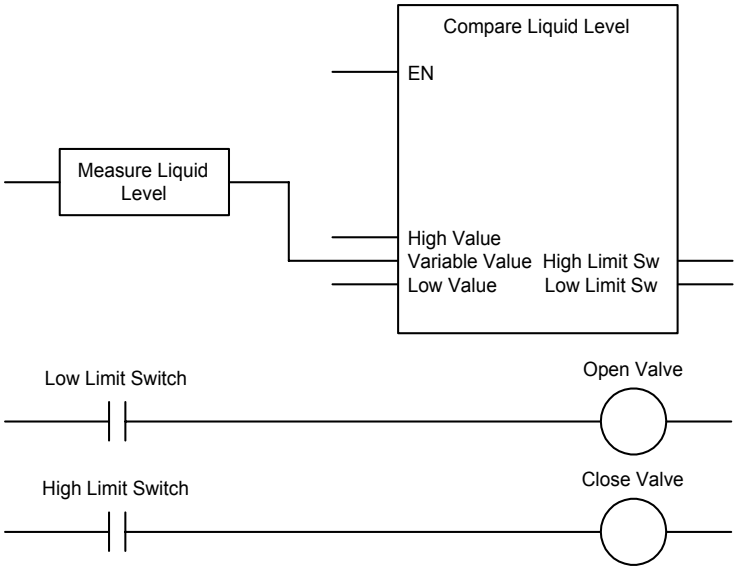

4.3.5.2.3 Sequential Function Chart. This editor provides a graphical method of organizing a control program using programming from other editors nested within. The SFC editor should include three main components: steps, transitions, and actions. Steps are individual control tasks comprised of programmed logic operators used to perform a particular control function. Actions are the individual operators of that task. Transitions are merely mechanisms to move from one task to another. With SFC the processor continues to perform the actions in a step until the

transition conditions is true, i.e. repeat the **step** containing the **action** of filling a tank until the **transition** condition of comparing level against "full" is true then move to **step** of close the valve.

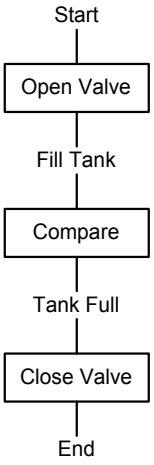

4.3.5.2.4 Structured Text. The Structured Text editor is a high-level language resembling Pascal or Basic used to perform control logic programming. Structured Text often proves to be the easiest way for the novice to write and understand control logic because of its inherent resemblance to sentences.

```
LET LowLimit = Low_Limit
LET HighLimit = High_Limit
LET Value = Liquid_Level
WHILE Value < HighLimit
   IF Value < LowLimit THEN
      DO Open_Valve
   END IF
END WHILE
DO Close_Valve
```

4.3.5.2.5 Instruction List. Instruction List editor is a text based Boolean language. The basic Boolean operators can be used to create more complex control applications. Similar to Assembly Language, the Instruction List editor is a low-level language that is very useful for simple control processes whose logic is repeated often. Instruction List allows the logic for these processes to be programmed once and then recalled in latter instances in the program.

```
Start:  LD   Liquid_Level     :Move value of liquid level into argument
        GT   Low_Limit        :Compare with Low Level Limit
        ST   Open_Valve       :Move (1 or 0, based on above) into output
        GT   High_Limit       :Compare with High Level Limit
        ST   Close_Valve      :Move (1 or 0, based on above) into output
End:
```

It is important to specify the PLC programming software in sufficient detail using the IEC 1131.3 standard because this will insure that the Contractor provides a quality software package that

complies with worldwide industry accepted standards.

4.3.5.3 Man-Machine Interface Software. MMI software refers to the software that provides the graphical user interface for operating the lock and dam. This software should run on any of the IPCs on the network and communicate to the PLC through the network. The designer should plan the system to determine which IPCs need to communicate directly to the PLC. Most MMI software can operate either as a client node, in which it "piggy backs" off of another computer for access to the PLC, or as a server node, in which it communicates directly to the PLC processor. Typically, only one or two IPCs in the same control room would need to be configured as an MMI server, while most of the IPCs located remotely would need to be configured as MMI servers. The intent is to limit the potential for failure of one IPC to inhibit operation from another IPC while minimizing direct communication to the PLC. In general, a small number of MMI servers on the system will enhance the communication speed with the PLC processor. Note that the MMI server need not be the Windows NT server.

4.3.5.4 User Interfaces. One of the key ingredients to a successful computerized control system is the general perception of the system by the operators. Most operators are not going to care what operating software is used or how much memory or what the scan time of the PLC processor may be. Therefore, an argument can be made that the most important part of the control system is the interface that allows the operator to use the system. For most new lock and dam control systems this will be the operating screens on the IPCs. These must be designed and programmed with considerable care to ensure a completely user-friendly interface that is convenient and, most of all, safe to operate. The IPCs located in the main control console should have all the operating screens necessary to control and monitor the entire project.

4.3.5.4.1 Semi-Automatic Operating Screen. On locks with Semi-automatic operating systems a screen such as Figure 4-6 should be included to facilitate complete normal lockage from one operating screen. The screen should include control of both ends of the lock, the traffic lights, warning horn, emergency stop, and other critical features unique to each project.

The designer should try to keep the semi-automatic or automatic operating screens (Figure 4-8) complete, yet compact and concise, since too much information or control of auxiliary equipment can make the screen confusing to operate. Remember there are other IPCs (minimum of three per lock) on which screens can be loaded for other feedback or control of auxiliary equipment. Animated graphics, based on real time data from transducers and sensors, makes the screen more "friendly" to the operators. The screen should be designed to allow a busy operator to take a look and very quickly ascertain the status of the major lock operating equipment.

4.3.5.4.2 Manual Operating Screens. The system should include screens for manually operating each piece of equipment, see Figures 4-8 and 4-9. Special, seldom used, operating procedures such as "interlocks bypassed" should be included on these screens. The system should probably include a special operating screen for each major piece of lock equipment, i.e. gates and valves. This control will still be through the PLC system with the full compliment of safety interlocks and permissives, but it will allow independent non-automatic operation of the individual pieces of equipment.

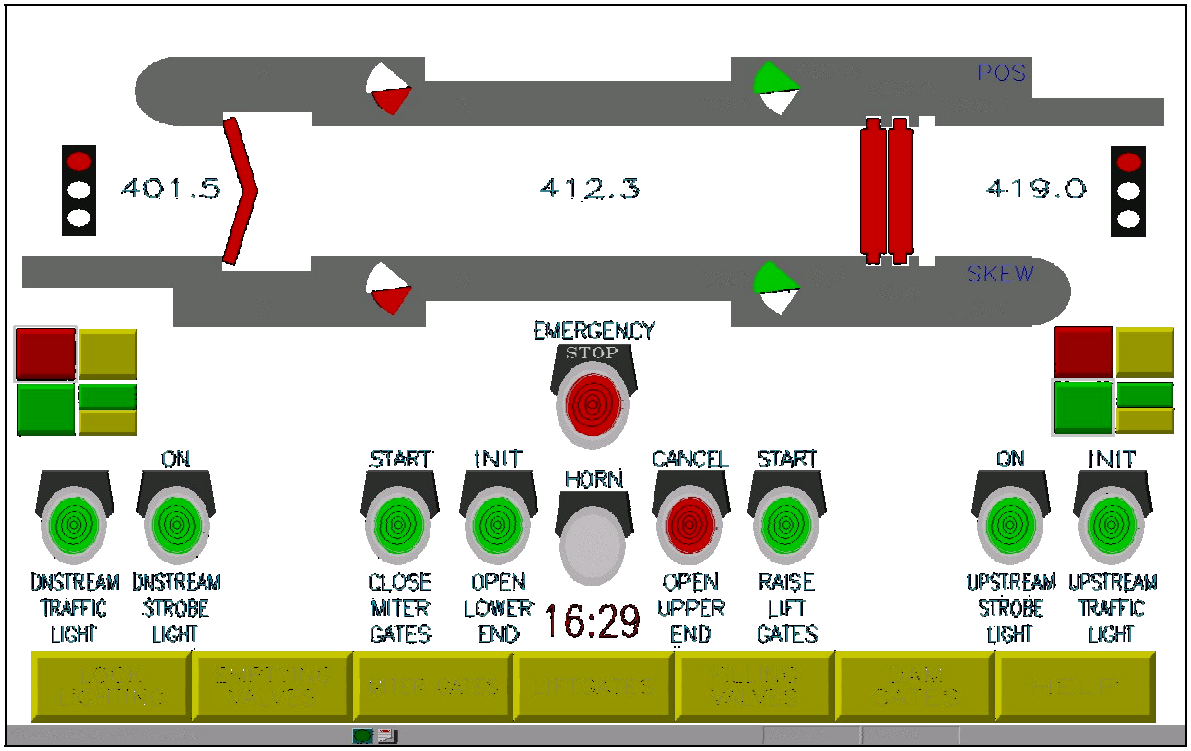

Figure 4-6. Semi-Automatic Operating Screen Currently in Use at Melvin Price Locks and Dam

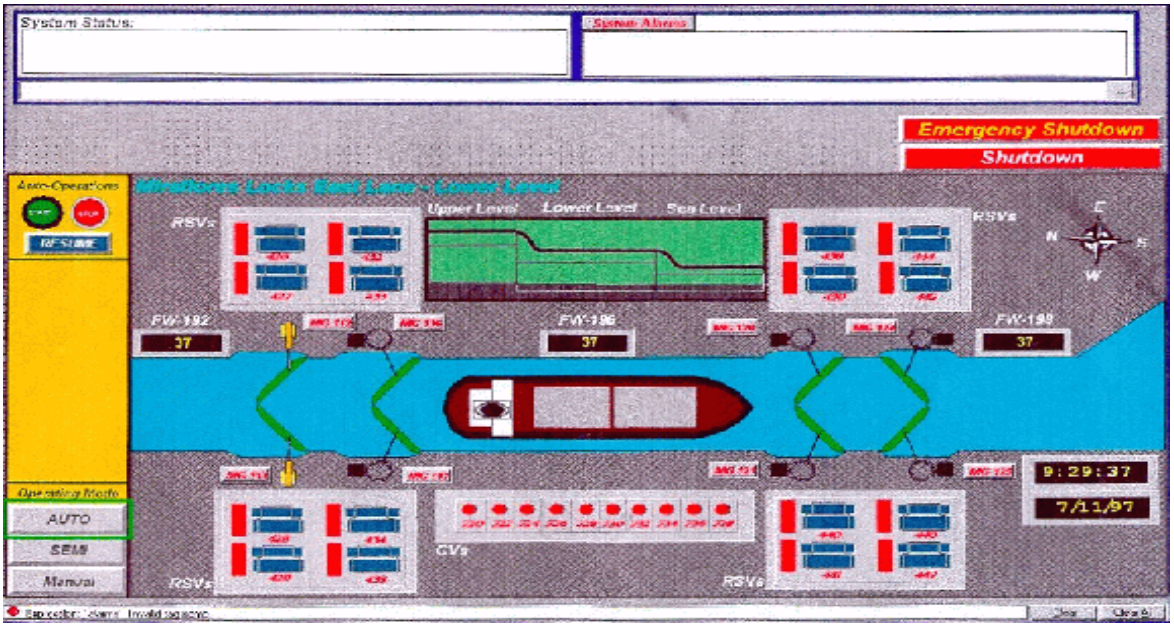

Figure 4-7. Automatic Operating Screen Proposed for Use on the Miriflores Locks at the Panama Canal

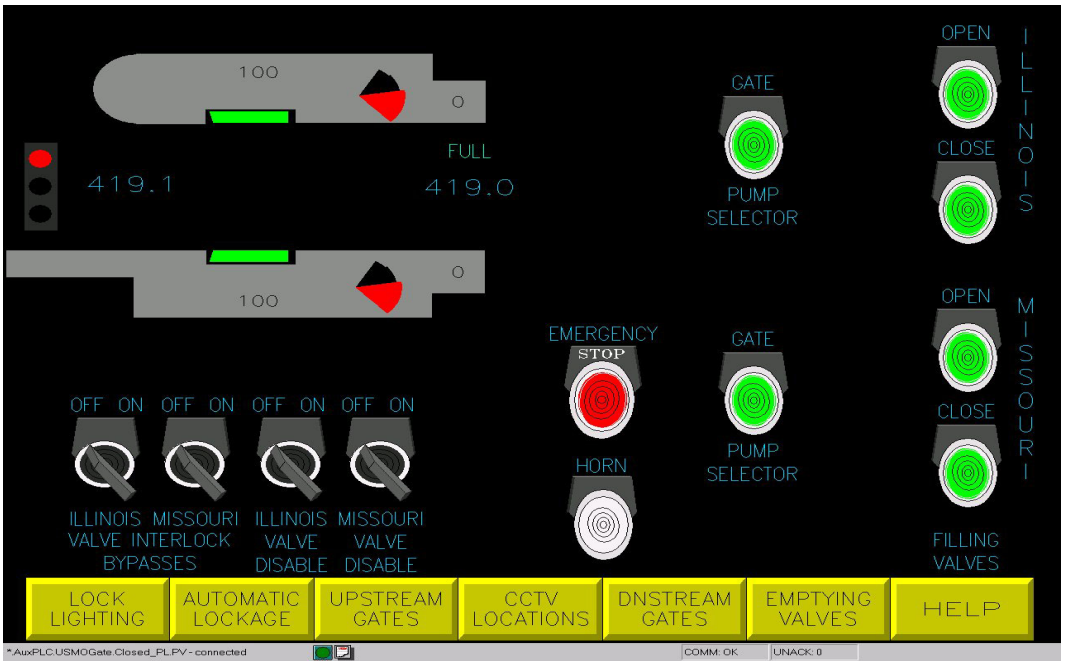

Figure 4-8. Miter Gate Manual Operating Screen Currently in Use at Mel Price Locks and Dam

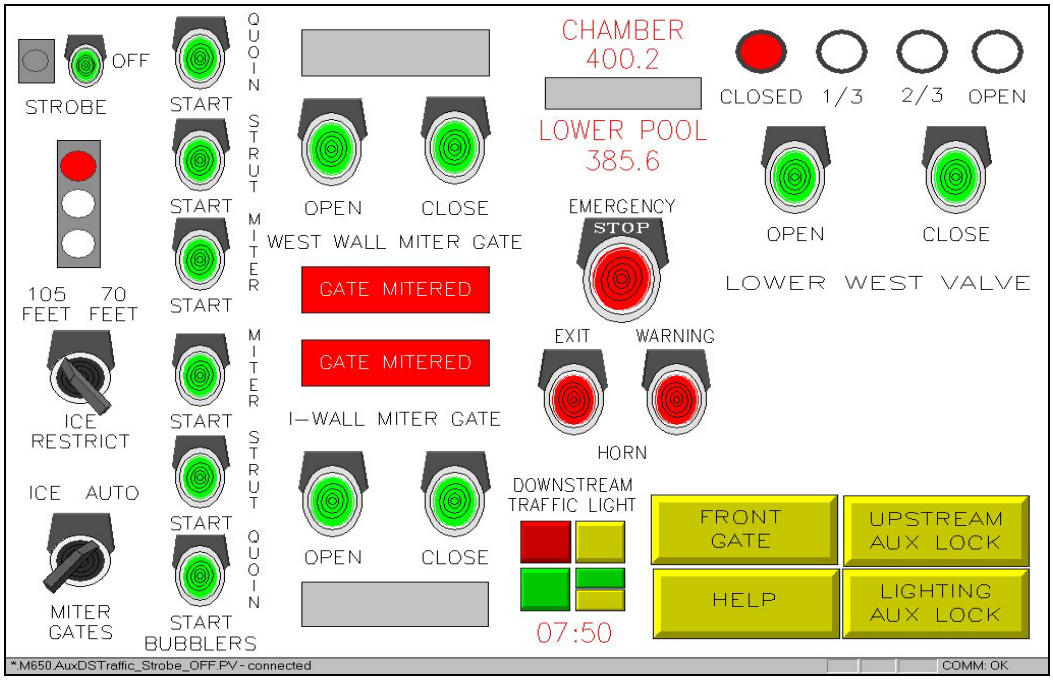

Figure 4-9. Manual Operating Screen Currently in Use at Locks No. 27

4.3.5.4.3 Trouble-Shooting Screens. A good operating system interface should include simple trouble-shooting screens that the shift chief can use to identify problems. These screens alert the shift chief of situations that can stop or affect the operation of the lock but are not necessarily equipment failures. These instances could be emergency stop pushbuttons that have been left depressed; equipment access doors with lockout switches; interlocks that have been bypassed on an auxiliary control panel; and emergency controls that are being used somewhere on the locks. This screen is intended to alert the shift chief of these situations so they can begin investigating and correcting the situations. This is intended to be the first screen the shift chief pulls up when equipment will not operate properly.

4.3.5.4.4 Alarm Screens. Alarm screens should be provided to alert operators and maintenance personnel to failure of lock operating equipment. Included on such a screen should be failure of any PLC component that can be diagnosed by reading registers in the processor (most PLC equipment failures can be found this way). These would typically include PLC communication failures, I/O failures, AFD failures, water level sensor failures, and position sensor failures.

4.3.6 Closed Circuit Television (CCTV) Systems.

4.3.6.1General. CCTV systems provide multiple functions in a lock and dam control system. A CCTV system provides a greater visibility of lock activities and allows the operation of multiple locks from a single control room. Employing video cassette recorders, the CCTV system can also serve to document accidents. With the appropriate cameras in place the system can inform the lock operator of fisherman or other boats near discharges or dam spillways. CCTV cameras can also be placed to provide additional security for entrance gates, storage areas, and visitor access areas. See Figure 4-10 for an example of a typical CCTV system.

4.3.6.2 System Purpose. Every lock and dam facility will place different requirements on the CCTV system. The system designer must identify the requirements and determine all of the roles of the CCTV system to provide a suitable design. Answers to the following questions can be used to begin the design. Will the system be used to provide better visibility of the lock for operators in control rooms at both ends of the lock? Is the system suppose to provide a means of operating a single or multiple locks from only one central control room? Do the lock operators need to watch the dam or spillway gates? Does the system provide security for the facility? Will remote monitoring or control be a possibility? Answers to these questions can help identify where on the project the video monitors, keypad controllers, and cameras are needed. Refer to Army Technical Manual TM 5-853-4 for detailed application guidelines.

4.3.6.3 Control Locations. For surveillance of the project during operation, control rooms equipped with video monitors and keypad controllers will be required. Currently on facilities requiring a complete CCTV system, lock operations will be from a single control room. However, even on these facilities there may be other CCTV control locations as described herein. The number of control locations will be needed to determine the number of monitors and keypad controllers the CCTV system must support. The system designer must know the total number of monitors and keypad controllers required when specifying other components, such as the matrix switcher.

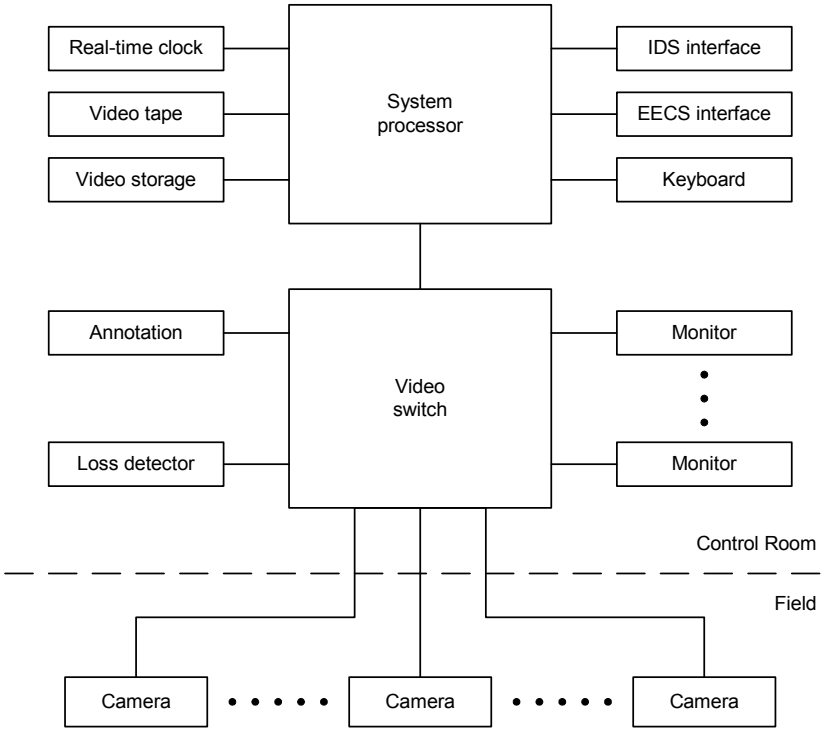

Figure 4-10 Typical CCTV System

4.3.6.3.1 Lock Control Room.

Single Lock, Multiple Operators. In this method of lock operation a control room is usually located at each end of the lock. Each control room should be equipped with a minimum of four video monitors and a keypad controller for operation of the lock. The four monitors provide a view of each side of the lock gates, an upstream (or downstream) view of the lock approach, and the fourth for a general view of the lock. Additional monitors should be added as required by the facility for viewing the security cameras, coverage of the dam, discharges, etc.

Single Lock, Centrally Operated. A central control room should be equipped with at least six monitors and a controller for the operation of the lock. The six monitors provide a view of each side of the gates, upstream and downstream, and a view of the upstream and downstream approaches. Additional monitors should be added as required by the facility for viewing the security cameras, coverage of the dam, discharges, etc.

Multiple Locks, Centrally Operated. A central control room should be equipped with at least six monitors and a controller for the operation of each lock. Most central control rooms have separate control consoles for each lock. Placing a CCTV system controller at each console reduces operator movement between the consoles. The six monitors per lock provide a view of each side of the gates, upstream and downstream, and a view of the upstream and downstream approaches. Additional monitors should be added as required by the facility for viewing the security cameras, coverage of the dam, discharges, etc.

4.3.6.3.2 Lockmaster Office. The Lockmaster may require a video monitor and keypad

controller in his office. This provides the Lockmaster a means to monitor the lock activities without disturbing operations in the main control room.

4.3.6.3.3 Lock Electrician Office. It is also convenient to provide a separate control location for the lock electrician. The electrician can troubleshoot system problems or test the cameras without disturbing operations in the main control room.

4.3.6.3.4 Visitor Center. A visitor center could be equipped with video monitors. The public could view the same cameras as the lock operators. The visitor center would not require a keypad controller. The matrix switcher can be programmed to automatically display various cameras on these monitors.

4.3.6.4 Camera Requirements. Another question to be answered by the designer is the use of color cameras. In the security industry black and white cameras are the standard because of the higher resolution. However, color camera technology is becoming more accepted. In most cases the contrast provided by the color image makes up for the lower resolution. Also, the designer should consider the appropriate use of pan/tilt/zoom (PTZ) vs. fixed mountings for cameras. Certain types of coverage, such as fixed security views or dam gates, do not necessarily warrant the extra expense of a PTZ mounting. Typically, however, complete coverage of a lock requires multiple views from each camera, which means cameras should include PTZ.

4.3.6.4.1 Lock. Camera coverage of the lock chamber is provided for all lock gates. Lift gates require one camera on each side of the lock. Miter gates require four cameras: one upstream and one downstream of the gate leaf for both sides of the lock. Because the lock chamber alternates between two water levels, cameras must be placed such that it can still see the water level when the chamber is empty. Cameras must also provide a good view of the gate recesses. Cameras located at the ends of the upper and lower guidewalls provide coverage of the approaches. These cameras should all be equipped with PTZ capability.

4.3.6.4.2 Dam. Cameras can be placed on the upstream and downstream sides of the service bridge to provide coverage of the pool and tailwater. Some facilities may require a camera at each tainter gate to watch its movement during pool changes. PTZ is an option to strongly consider for these cameras.

4.3.6.4.3 Security. Cameras may be placed to cover entrances to the lock and dam, storage areas, and visitor access areas. An integrated dome camera can provide indoor coverage of visitor centers or public access areas. PTZ may not be required for these cameras.

4.3.6.5 Documentation of Accidents. Recording the CCTV cameras can provide valuable documentation for accidents at a lock and dam. The designer must determine the level of documentation required for the facility. The more cameras recorded, the greater the amount of documentation available, but at a higher cost. One method is to record the output of one of the monitors to an elapsed-time VCR which is constantly recording. The lock operator can select the camera closest to the accident and display it on the recorded monitor. The operator can then pan, tilt, and zoom the camera to capture the accident. A real-time VCR can be substituted in place of the elapsed-time VCR to obtain a smoother recording. The real-time VCR should be equipped with a remote switch so the lock operator can turn the recorder on to capture the accident. This method places much responsibility on the lock operator. Operators may be busy preparing for or

responding to the accident. For additional documentation, a multiplexer may be used to record multiple cameras to a time lapse VCR. The multiplexer can provide a recording of up to 16 cameras. During playback, the multiplexer can display multiple cameras or display the recorded frames from a single camera. The designer must note that the time lapse increases as the number of recorded cameras increases.

4.3.6.6 Star vs. Daisy Chain. All camera receivers and keypad controllers require a connection to the matrix switcher. Common practice is to connect the units in series or "daisy chain" them together as shown in Figure 4-11. Two loops are created. One for the camera receivers and the other for the keypad controllers. Daisy chained units may require less wire for installation, but a failure somewhere in the chain can affect all of the units after the failure or possibly every unit in the chain. The star configuration uses a distribution unit to essentially provide a point-to-point connection from the switcher to the receiver or controller and helps to isolate a failure to only a single unit. A further hybrid is to daisy chain two or three units at the end of a star connection. This provides the best qualities of both installation techniques. Ease of installation and failure isolation. The daisy chain configuration is an acceptable design, but the system designer should consider the impacts to reliability, maintainability, and future expansion.

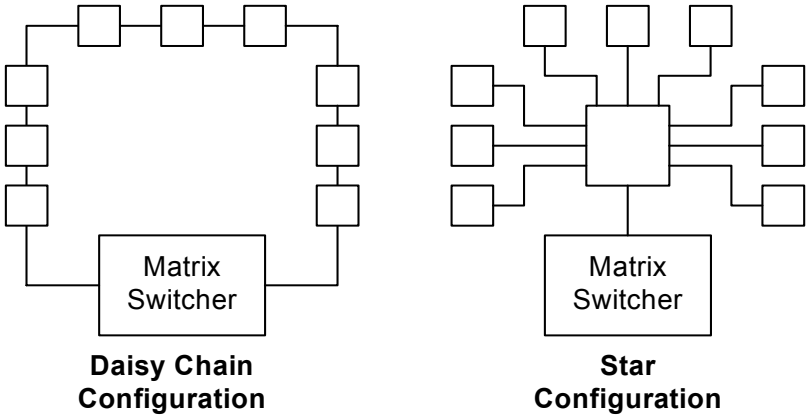

Figure 4-11. Receiver/ Keypad Controller Connections

4.3.6.7 Lighting Conditions. For a CCTV system to work properly, adequate lighting must be provided. The sensitivity of a camera refers to its ability to produce a usable image given a minimum lighting level. The CCTV market contains many cameras with various sensitivities, but the designer must remember that just because a manufacturer's specification sheet states a certain sensitivity, it does not mean the picture will be usable at that level. For exceptionally low light level areas consideration should be given to the use of monochrome cameras or cameras specially designed for use in low light levels.

4.3.6.8 Lightning Protection. While fiber optic communication and composite video signals are immune to problems caused by lightning, cameras, coaxial cable, pan/tilt units, and receivers are not. Therefore it is critical to the success of the CCTV system to provide proper protection from transient surges caused by lightning. All metal portions of camera and receiver mounting material should be well grounded and the CCTV system manufacturer should be consulted for proper lightning protection components for the cameras and receivers.

4.3.6.9 Matrix Switcher. This device is at the center of the CCTV system. Each monitor, camera, and keypad controller is connected directly to the matrix switcher. As a minimum, the matrix switcher consists of a card cage, CPU, camera input cards, and monitor output cards. The CPU within the switcher performs the operations necessary to switch any camera input onto any monitor output. For example, a 256 x 256 switcher is capable of controlling 256 cameras and 256 monitors. Most systems are modular in nature meaning the addition of camera input cards increases the switcher's input capabilities. In this example input cards could be added for a total of 256 camera inputs. Card cages can be cascaded as the system grows. Monitor outputs can also be added in this fashion, however some manufacturer's may require additional card cages to increase the number of monitor outputs.

4.3.6.9.1 Switcher Capabilities. Software within the matrix switcher CPU provides additional functions and will vary by manufacturer. The CPU may restrict or partition which cameras are displayed on the monitor outputs. This may be useful in a multi-lock control room. Camera restrictions placed by the CPU may prevent the operator of one lock chamber from inadvertently displaying the cameras of the other lock on his monitors. The CPU may partition monitors to the keypad controllers. This restricts the control of monitors to certain keypads. This may prevent an operator from accidentally changing the camera displayed on another monitor. The CPU can sequence cameras on a monitor. Cameras provided for security can be sequenced on a single monitor rather than dedicating the use of multiple monitors to security.

4.3.6.9.2 Keypad Controllers. All of the keypad controllers provided with the CCTV system are connected to the matrix switcher. The keypad controllers generate the commands to perform switching operations within the matrix or other capabilities described above.

4.3.6.9.3 Pan/Tilt/Zoom. The switcher generates the pan, tilt, and zoom (PTZ) commands for the cameras contained in the system based on inputs from the keypad controllers. Receivers, located at each camera, are connected to the switcher to decipher the PTZ commands for the camera.

4.3.6.9.4 Alarm Interface Unit. This is a separate unit that is cabled to the matrix switcher. The unit provides annunciation for a set of normally closed contacts. Depending on the manufacturer, the interface unit provides a minimum of 16 alarm inputs, however the units can be cascaded to provide a greater number of inputs. When an alarm condition occurs, the CPU, based on programming, is directed to display the video where the alarm occurred. For example, the system could be programmed to monitor the entrance gate during the night shift. When the entrance gate is opened, an alarm sounds and the camera showing the gate is displayed on the video monitor. Similarly, certain monitors can be programmed to cover the lockage of a vessel at it moves through the lock. The interface unit may be equipped with an auxiliary relay output to activate a VCR or other device. In this manner the CCTV and IPC/PLC systems become one integrated control system.

4.3.6.9.5 Time/Date/Titler. This device may be contained on a card resident in the switcher card cage or in a separate enclosure cabled to the switcher, dependent upon the manufacturer. Its purpose is to display the time and date on the video monitors. Additional lines of text are provided for camera identification. Camera titling is programmed through the switcher CPU. The titler may provide different lines of text for camera identification during an alarm condition.

4.3.6.10 Multiplexer. For smaller CCTV systems, this unit can be substituted for a matrix switcher. A multiplexer can create a single output signal from multiple input signals. An example of this is when multiple cameras are displayed on a single monitor. A 16-input multiplexer can be switched to display 1, 4, 9,or 16 cameras. One drawback to the multiplexer is picture resolution. If a video monitor has 525 lines of horizontal resolution, the multiplexer will divide this among 2, 3, or 4 camera pictures, depending upon how many cameras are being displayed. If all 16 cameras are displayed on the monitor, each camera display will only have ¼ the horizontal resolution of its original display. Another use of a multiplexer is for documentation purposes. A 16-input multiplexer can store 16 camera signals to video tape. During playback, the multiplexer can display all 16 camera or just the frames for a particular camera. Note that the playback from the tape will not be real-time because the multiplexer is dividing the recording time among all 16 inputs.

4.3.6.11 Quad Unit. A quad unit is similar in operation to a multiplexer but is limited to four inputs and one output. This unit will display four cameras on a single monitor

4.3.6.12 Video Monitor.

4.3.6.12.1 CRT. The most common video monitor is the Cathode Ray Tube or CRT. The designer must determine the size and mounting of the video monitors in addition to the number required. Monitors are available in 9”, 13”, 14”, and 20” sizes. A common approach is to use multiple 9” monitors. It may vary by manufacturer, but two 9” monitors can be mounted side by side in a standard 19” rack. Mounting of the monitors should minimize the strain on the lock operators. Commercial enclosures with many different configurations are available. Most often it is more cost effective to use commercially available consoles and avoid specially constructed consoles. A modular approach also reduces impacts from upgrades and equipment repair. Another approach is to use a larger monitor in combination with a quad unit. This allows the single monitor to display multiple views. This method may ease installation and maintenance, but if the monitor fails, four views are lost instead of just one. Also, this may not be the cheapest approach and is only included as an option to the designer for certain applications.

4.3.6.12.2 LCD/Plasma. Flat screen technology has improved in recent years, eliminating the requirement of the user to be directly in front of the screen. Viewing angles have increased to 160°+. These monitors require a much smaller footprint than the CRT monitors. The LCD/Plasma monitors are available in various sizes. While prices of these monitors are dropping, they are currently considerably more costly than the CRTs.

4.3.6.13 Keypad Controller. This device allows the user to control which camera is displayed on a monitor and sends pan, tilt, and zoom commands to the camera. All commands from the controller are directed to the matrix switcher.

4.3.6.13.1 Keyboard/Joystick. This type of controller is available in a desk-top or rack-mount version and can be considered the industry standard. The controller contains a small keyboard and pushbuttons for camera and monitor selection, zoom, focus, auto-iris, etc. The joystick provides pan and tilt commands to the currently selected camera.

4.3.6.13.2 Computer-based. Some manufacturers provide computer-based control through a graphical user interface (GUI). A serial connection provides the communications between the

matrix switcher and the PC. With the manufacturer-supplied software, the user can develop a site plan showing the camera and monitor layout. Camera and monitor selections can be made using the “drag and drop” operation common in Microsoft Windows operating systems. Windows may contain PTZ controls to replace the joystick and buttons to replace the zoom and focus controls. Using a video overlay card in a expansion slot, the PC can be connected to the matrix switcher as a video monitor.

4.3.6.14 Receiver. Typically, a receiver is required for each camera in the CCTV system, but some manufacturers produce receivers to drive multiple cameras. The connections between the receiver and camera should be kept as short as possible, so a multiple-camera receiver should only be used when cameras are adjacent to each other. The receiver decodes the serial (RS-422) commands from the matrix switcher and sends them to the camera. The receiver or its accessories may offer “preset” capabilities. The user can set the position and zoom for a camera and store it in memory where it can be recalled. The receiver will require 24VAC or 120VAC power, dependent upon the manufacturer. The receiver provides power to the camera and the pan/tilt drive. The output to the pan/tilt drive may be 24 or 120VAC dependent upon the drive’s requirements.

4.3.6.15 Interconnection Methods. Each camera receiver requires multiple connections to the matrix switcher. The video signal from the camera is transmitted to the matrix switcher over a cable separate from the receiver’s serial connections.

4.3.6.15.1 Copper. The receiver serial connections are made using a dual twisted-pair cable and the video connection to the camera is made using coaxial cable. Both connections are distance limited. While distance may not be a problem with the lock and dam, the designer must consider other problems. Lightning and noise can cause major problems with the CCTV system, including equipment loss. Camera receivers, especially the serial connection, are very susceptible to damage.

4.3.6.15.2 “Up the Coax.” CCTV system manufacturers have developed methods of transmitting the camera commands (PTZ) over the coaxial connection to the receiver. While this method does not offer complete immunity to noise and surges, it does simplify installation and eliminate the need to route dual twisted-pair cable all over the facility.

4.3.6.15.3 Fiber Optic Receivers/Transmitters. While more expensive to implement, use of fiber optic transmission offers immunity to noise and the greatest isolation between the receivers. These factors will reduce and limit equipment damage. Use of fiber optics can also increase the distances between equipment. The maximum distance is related to the losses associated with the fiber. These may be splices, connectors, etc. Multi-mode fiber can be used for distances between 3.2 to 4 kilometers (2 to 2.5 miles). Single mode fiber (more expensive than multi-mode) can provide distances from 10 to13 kilometers (6 to 8 miles). The standard optical connection is the ST type and most units are configured for 62.5/125 micron fiber optic cable. The most basic transmission system provides the transfer of one composite video signal over a single fiber optic cable. Some systems offer multi-channel options allowing the transfer of 2-4 composite video signals. Again, the copper connection between the camera and transmitter should be kept as short as possible. Other systems go one step further by including the transmission of data with the composite video. The data is the pan, tilt, zoom, focus, etc. commands for the cameras. The video is transmitted from the receiver to the switcher and the data is in the opposite direction. This simplifies installation by eliminating the need for the dual twisted-pair cable. This is considered

the most reliable solution for networking CCTV receivers. Other units may include audio.

4.3.6.16 Pan/Tilt Drive. This unit provides the pan and tilt movement for the camera. It receives 24 or 120VAC signals from the camera receiver. Drives are available for loads up to 100 pounds. Drives should also be equipped with travel limits and adequate braking to prevent coast.

4.3.6.17 Camera Mounting. Manufacturers providing equipment to wall mount, corner mount, parapet mount, and pole mount camera equipment should be consulted. The designer must insure that the hole pattern in the mounting equipment is compatible with the pan/tilt drive. In a lock and dam application, pole mounting is used most often. Pole mounting provides the heights needed to obtain a good view down in the lock chamber. Parapet mounting may be used on a dam structure to provide camera coverage of either the lock or dam.

4.3.6.18 Camera Housing. Camera housings protect the camera and lens from tampering when used indoors and also from the elements when used outdoors. Accessories may be available for the housing to control the inside temperature, block the sun, and a wiper to keep the viewing window clear. A thermostat controls the heater inside the housing. Heating the unit keeps the viewing window clear and prevents condensation. Sun visors eliminate some of the problems associated with the glare produced by the sun. The visor also helps keep the rain off the viewing window. When selecting a housing, choose a unit with a wiper available. If rain becomes a problem in the future, the wiper can be added. Some units can be pressurized with dry nitrogen to eliminate air from the unit. This will reduce problems with moisture and condensation.

4.3.6.19 Camera. Outdoor cameras, should be ½-inch, high-resolution, color charge-coupled device (CCD) cameras equipped with suitable wide-angle zoom lens. Cameras should be enclosed in a pressurized environmental housing mounted on a heavy-duty pan and tilt drive. Refer to Army Technical Manual TM 5-853-4 for camera and lens application guidelines.

4.3.6.20 Integrated Dome Camera. Indoor cameras, typically housed in a dome unit with an integral pan/tilt and receiver, should be ¼-inch, high-resolution, color CCD cameras equipped with a suitable zoom lens.

4.3.6.21 Recording Devices. As a minimum, video recordability should be a feature of any CCTV system. The idea of providing this capability is to capture accidents on video tape to help settle law suits. With sophisticated remote control systems, additional capabilities such as recording of audio and radio communication should be considered.

4.3.6.21.1 Analog. Video recording can easily be accomplished with traditional time-lapse analog VCRs. One VCR should be considered for each lock. With a single, stand-alone VCR the operator is responsible for switching the appropriate camera onto the monitor being recorded. If the operator forgets, an accident may not get recorded. Also, with time-lapse VCRs, unless the operator removes the tape containing the accident recording, it will get overwritten after the time set for restarting the record cycle.

4.3.6.21.2 Digital. Digital recording systems offer several advantages over traditional analog VCRs. A digital recording unit converts an analog video signal to digital data for storage on its internal hard drive. The internal hard drive can store 2-6 hours of video. For longer periods of storage, the video is transferred to digital audio tape (DAT). A jukebox is used to change the DAT as they fill with data. The use of the jukebox eliminates the need for an operator to change the

video tape in a VCR. The jukebox is sized to provide the needed length of time before the data is over written. Many of the digital recording units can record the video from multiple cameras. Digital recordings can be real-time at thirty frames per second (fps), or time-lapse. Time-lapse recording rates range from 1 to 7.5 fps. Some time-lapse units can record as many as 32 separate cameras. Some units can vary the recording rate based upon a discrete input of the recording unit. Retrieval of information is also much quicker and convenient, typically done with desktop PCs. Video can be retrieved by camera, date, and time. Also, DATs, because of their smaller physical size, can be archived using much less storage space than VHS tapes. There is a high price to pay for this flexibility because digital recording systems are currently many times as expensive as traditional analog recording systems.

4.3.6.22 Motion Detector. Cameras dedicated to security monitoring around a lock and dam can benefit from motion sensing technology. Motion detectors have become sophisticated enough that they should be considered when designing a CCTV system. Current models can be configured to filter out rain, snow, cloud shadows, small animals, and so forth. They can also be configured to display intruder paths for later viewing, should the operator not immediately notice the intruder. Detectors can also be connected to audible alarms for immediate notification of a security problem. Motion detectors may also have application at low-volume locks to detect small vessels in the lock approaches.

4.3.6.23 Upgrade Frequency. Generally, the upgrade frequency of a CCTV system depends on the type of device or component to be upgraded. CCTV cameras and monitors will usually need to be upgraded most frequently in a CCTV system. Ultimately, equipment serviceability and availability of spare parts will determine the upgrade frequency of CCTV system components. See Table 4-3 for recommended CCTV system upgrade frequencies. Note that the frequencies listed are the maximum recommended and should be used strictly as a guideline. Depending on the type of hardware, its day-to-day use, and its environmental stress, the upgrade frequency may be lower or higher. The frequencies listed are for planned upgrades and not routine maintenance, such as replacement of failed or damaged components.

4.3.7 Auxiliary Equipment. Selection and installation of a quality PLC/IPC/CCTV control system is only part of the work necessary to complete a successful lock control system. The input/output devices that provide information to the computerized control system are just as critical in the overall success of a lock and dam control system as the PLC itself. Failure to specify quality materials and proper installation and testing of field devices will diminish the operators' confidence in the whole system, regardless of how good the PLC/IPC system may be. Also, consider that these devices often serve a dual purpose when they are used in the emergency back-up system. Redundancy and spare parts are an important part of the auxiliary equipment design process.

4.3.7.1 Limit Switches. The most common PLC input device is a dry-contact limit switch. Different switches are used for different applications. These devices are particularly useful for end-of-travel or overtravel limit switches because they are absolute, passive, and require no

Table 4-3 Recommended CCTV System Upgrade Frequencies

Description	Notes	Upgrade Frequency (years)
CCTV System		
Switcher		15
Alarm Interface		15
Control Distribution Unit		15
Control Keypad		10
Computer Control Module		10
Monitor		5
Quad Combiner		10
Camera	CCD type, B&W or color	10
Power Supply		10
Lens		10
Housing		15
Pan/Tilt Drive		15
Dome Camera	Integrated type	10
Receiver		10
Fiber Optic Transmitter		15
Power Supply, Fiber Optic Transmitter		15
Fiber Optic Receiver	Rack-mounted type	15
Fiber Optic Rack		15
Power Supply, Fiber Optic Rack		15
Recording System		
Analog VCR		10
Digital Recorder		10
Digital Recorder Software		5
Digital Recorder Option Board		10
Digital Archiving System	Hard Drive/DAT Drive	5-7

electronic calibration. Limit switches of this type can also be provided with auxiliary contacts for a hardwired back-up system. In this day of not using brand name and “or equal” specifications, carefully specifying all of the important features is essential to insure that the contractor provides a quality product. Limit switches are as critical, if not more so, than any other feature of the control system, and time should be taken to write sound specifications for procuring, installing, and testing them.

4.3.7.1.1 Vein/Roller/Lever Operated. Simple vein or roller operated dry contact limit switches are used for all types of moving machinery. It is a good idea to specify these with extra contacts for hardwired applications. Addressable limit switches, which can be connected directly to the PLC network, eliminating the need for I/O racks, are becoming increasingly popular and are a good consideration for non-critical applications where there are few limit switches and great distances between them. Their usage on locks and dams has been limited generally because lock

operating machinery is grouped together and has enough limit switches in one location to justify an I/O rack. Specifications should include heavy duty, oiltight, corrosion ratings, number, rating, and type of contacts, NEMA 4X or 6P rating, UL listing, operator lever type, and operating temperature range.

4.3.7.1.2 Magnetic/Proximity/Photo Electric. By eliminating moving parts and providing a degree of submergibility, magnetic and proximity limit switches have replaced the vein operated switches for use on the end of miter gate leaves for indication of proper miter, and in the miter gate recesses for indication of a fully recessed gate. Headquarters, to avoid damage to miter gates, has mandated positive indication of the miter and recess positions. These switches must be installed and used in the control system as interlocks to prevent filling of the chamber (improper miter) or changing the traffic light to green (improper recess). The use of these type of switches is a good consideration in other areas where ice can hinder the operation of vein operated switches. When procuring magnetic or proximity switches specifications should include number, type and rating of contacts, NEMA 4X or 6P rating, UL listing, temperature range, copper or fiber optic leads, side or top mount, standard and extended operating ranges, and surge protection. The extra time it takes to properly specify a good switch is well spent.

4.3.7.2 Encoders. Position and level measurement require the installation of an electronic encoder such as those included below. Encoders should be specified without the need for external or third party converters, decoders, linearizers, or signal conditioners. These devices have much higher failure rates than PLC I/O cards and cannot always be diagnosed for problems through the PLC system. Encoder signals should be fed directly into a PLC intelligent input card. It is usually not a good idea to use electronic encoders in a hardwired back-up system. The need for scaling and offsetting factors, easily accomplished in the PLC software, coupled with the distances that the signal must travel will often cause reliability, noise, and calibration problems when used without a PLC system. These problems could, depending on how the system is wired, interfere with the normal PLC control system. Electronic encoders require special installation, wiring, and shielding in order to provide long-term reliability and accuracy. Large electrical contractors often will not provide this type of detailed quality installation unless specifications are written tight enough to force them.

4.3.7.2.1 Pressure Transducers. Pressure transducers are used to measure the level of water in and around the lock and dam. A pressure transducer produces an analog signal directly proportional to the amount of water in which it is submersed. Typically, a designer should put at least two (2) transducers in the upstream pool, two (2) in each lock chamber, and two (2) in the downstream tailwater. Such transducers can also be used to measure the amount of leakage in manholes and crossover tunnels. Placing two transducers in areas of critical applications allows for reliability and accuracy checks in the PLC software. In an automated system, the pressure transducers become one of the most critical control components because each automated sequence depends on determination of equal water levels without visual check from an operator. In this case it is essential to have good reliability checks and failover programming built into the PLC program. When specifying submersible pressure transmitters, design engineers should take the time to consider transmitter construction (titanium provides excellent corrosion control), unique pressure rating, excitation power supply level, output signal and wiring, accuracy, repeatability, electrical connection (should include molded integral cable of sufficient length for each application), resolution, and installation instructions. It is important to note that merely stating that the transducer shall be installed in accordance with manufacturer's recommendations may not

be sufficient. There are many different applications for such transducers in industry and many are not in as harsh an environment as a river near a lock and dam. The installation should provide protection from ice, debris, and zebra muscles, should facilitate easy maintenance and replacement, and should provide unobstructed atmospheric reference pressure to the breather tube.

4.3.7.2.2 Rotating Encoders. Angular position of rotating machinery, such as cable spools, gears, chain sprockets and miter gate machinery is accomplished through the use of rotating angle encoders. Typically these are mounted adjacent to the machinery and attached via shaft couplings. Shaft couplings should be one-piece flexible stainless steel and sized to exactly match the encoder shaft and adapt it to the machinery shaft. Installation details should include provisions for making the machinery shaft extension absolutely true and aligning the shafts as true as possible through the use of properly installed stainless steel shims. Details to include in the specifications are NEMA 4 or 6P housing, output signal and wiring, power supply and excitation requirements, number of turns needed to resolve entire travel of machinery, repeatability, accuracy, resolution, lightning and surge protection for primary and secondary windings, shaft size, operating temperature range, and installation instructions. Also, it is important to insure that the rotation of the shaft extension to which the encoder is coupled is linear with the movement of the machinery. If not, programming must be added to the software to correct this. Note: Wire cable wound on a drum is not a linear application because the length of cable unreeled each rotation varies with the amount left on the drum. Each successive wrap of cable on the drum is shorter than the previous one by the cable diameter multiplied by 2B.

4.3.7.2.3 Inclinometers. Inclinometers are used to track angular tilt of the machinery or structural member on which they are mounted. A good application for such a device at a lock and dam project is the position of the tainter gates. Angular rotating encoders do not work as well in this application because the rotation of the cable drum or chain sprocket is not linear with the change in opening between the gate and the sill. Also, because a tainter gate can become frozen in place during times of heavy ice and because drift can be lodged under the gate, the rotation of the machinery is not necessarily indicative of gate movement. A submersible inclinometer mounted on the tainter gate strut will give an accurate indication of gate movement. By programming simple interlocks in the PLC software, slacking of the hoist cables or chains can be avoided in the event the gate does “hang up”. As stated above the signal from the inclinometer should be fed directly into the PLC control system as a “raw” electronic signal. All scaling, trigonometry, and linear and angular offsetting should be done in the PLC software. It is very important that this type of device be thoroughly engineered in a design document. Some parameters to determine in a specification are housing construction, NEMA 6P (may require separate purged enclosure), angular operating range, resolution, accuracy, repeatability, vibration sensitivity, axis of measure (to insure proper mounting), excitation power supply requirements, output signal and wiring, temperature operating range, and detailed installation requirements.

4.3.7.2.4 Hydraulic Cylinder Position Transducer. With the increasing popularity of hydraulic cylinders in navigation lock equipment design, several manufacturers offer position sensing transducers integral to the cylinder construction. The type of transducer and the output signal vary by manufacturer and a design engineer should consider this and specify the type of position sensing system that is best for their equipment. The output signal should be directly compatible with the PLC system I/O cards available. As stated above, it is not a good idea to use third party converters and signal conditioners to “massage” the signal before it is read by the PLC.

4.4 Safety and Security Considerations.

4.4.1 Personnel. Safety for our lock personnel, commercial vessel crew members, pleasure craft occupants, and public visitors is the single most important consideration when designing a quality operating system for a lock and dam facility. This should be considered in every aspect of the electrical system design including the features discussed below. It is strongly recommended that designers of such systems spend sufficient time observing the day-to-day operations at a lock and dam project. While this will not qualify a designer to operate a lock and dam, it may give him/her a better idea of some safety concerns to consider when designing a replacement electrical system or that for a new lock and dam. There are numerous procedures at each lock such as tow cuts and ice maneuvers that, while not obvious to the casual observer, can place the operators in serious danger if the equipment is not located strategically, fails to function properly, or interlocks and safety features do not operate in timely and correct fashion. All of these have to be considered at each step of the design.

4.4.1.1 Accessibility. All electrical and electronic equipment has to be installed in a way that it is safely accessible by lock maintenance personnel. All equipment that has energized circuits should be properly marked. At times it will be necessary to perform maintenance on this equipment in the energized state. Equipment for which entry will cause a shutdown of the lock control system should also be marked with such a warning. All machinery and electrical gear that is controlled from a remote location should have warning labels and a means for disabling the remote control. Also, it is a good idea to provide a means for authorized personnel to operate the machinery from local controls in the event of emergency, or at times during routine maintenance.

4.4.1.2 Operating Locations. When locating lock operating stations, designers must provide visibility to all aspects of the project as necessary to safely control the project. This can be done with direct visibility or with Closed Circuit Television cameras. Only experienced lock operators will be able to determine exactly what features of the project require constant, periodic or occasional surveillance during a lockage. Other areas may require surveillance for security reasons.

4.4.1.3 Machinery Safety Interlocks. All operating machinery should be provided with safe access to the portions that require maintenance. In addition interlocks should be in place to insure that machinery cannot be remotely started while being serviced. Interlocks can consist of machinery room door switches used as inputs to the PLC system. Auxiliary contacts on these switches can be used as hardwired interlocks. It is a good idea to have PLC inputs from these switches because of the flexibility and remote indication that can be provided.

4.4.1.4 Emergency Stop/Hardwired Backup. All lock control systems should have emergency stop pushbuttons at various points around the lock. These areas include but are not limited to all lock control consoles, at each miter gate machinery area, along the lock walls in areas frequented by lock personnel, at motor control centers and switchgear locations, and in galleries where electrical and mechanical machinery is located. The emergency stop pushbuttons should be large, red, mushroom head type, clearly marked, and hardwired directly to motor starters. Consider an auxiliary MCC starter bucket with relays for use in each gate and valve starter circuit.

4.4.1.5 Motion Detectors. Some locks have submersible walkway bridges, walkways across miter gates, or other traffic areas that can be compromised by operation of lock equipment. In

these locations, particularly if the lock is automated or remotely operated, motion detectors can provide important safety interlocks to prevent movement of machinery when lock personnel are passing through these areas. It is also a good idea to have some type of visual and/or audio indication prior to actual movement of lock equipment to allow personnel to stay clear of these areas.

4.4.2 Computer System. With so much of the control system integrated with the IPC/PLC system, computer system security is a major concern. In general, access to the lock operating IPCs should be limited to qualified lock operating personnel. Access to the computer hardware as well as the ability to alter programming should be limited to the lock electrician and to district electrical engineers assigned to assist the lock personnel in maintaining and providing training for new computerized control systems.

4.4.2.1 Hardware. The biggest threat to the security of computer hardware is unauthorized use and the introduction of foreign software opening the system up to computer viruses and hardware compatibility problems. Industrial personal computers have an optional locking cover over the floppy and CD-ROM drives to prevent foreign software from being used on the system. While features such as dial-up routers, modems, and internet connections offer greater flexibility in maintaining and trouble-shooting the lock control network, they also are means for external "break-ins" to the system. Firewalls and switches to disconnect the phone lines are ways to combat this problem.

4.4.2.2 Software. The lock operating system should be equipped with a password security system that only allows qualified personnel to access the lock operating screens. Administrative tools and development software privileges should be limited to the system administrator account of which only qualified personnel should have access. Back-up directories should exist on each IPC so that databases on any of the machines can be re-built quickly and correctly in the event of failure. Back-up directories should be updated automatically anytime there are changes to the database. As stated above, external means of access to the network also creates a way for software "hackers" to access the system and corrupt software. Secure passwords and network firewalls can help this problem but they are not guarantees against system intrusion.

4.4.3 Communications. Most of the communications between the IPC system and the machinery PLC I/O racks is via fiber optic cable. Therefore noise and outside interference with the communication signal is not an issue. The fiber optic communication cable will be run in most cases in secure areas around the project. Remote communication and access via the dial-up router, modem, or district intranet as stated above is more likely the method for compromise or security breech of the lock control communications systems. Isolation of the lock control net as stated above will keep the system secure from would-be intruders.

4.5 Procurement Considerations.

4.5.1 Computer Hardware. One of the most difficult tasks when putting together a computerized lock control system, whether automated or not, is the acquisition of quality state-of-the-art computer hardware. Often large construction contracts have too long of a construction period to write specifications around state-of-the art computer equipment. Even PLC components can be superceded in design during major construction of a new lock and dam. Government

furnished equipment is not always a good idea because of the issue of responsibility. In theory, GFE is a good idea but in practice many agencies have had trouble administering contracts with a large amount of GFE. Optional bid items and change orders are usually difficult to negotiate and prove costly when issued near the end of a large contract. Following are some guidelines and ideas for procurement of such equipment.

4.5.1.1 Industrial Personal Computers. Computer Hardware will usually only stay "state-of-the-art" for about 1 year and somewhat current for 1-3 years. Therefore, it is not recommended to specify PC type hardware in a contract of duration more than nine months. Even at that with reproduction, advertisement, contract award, notice to proceed, and shop drawing phases the equipment model design will likely be well over a year old when the Government assumes ownership of the control system. Contracts of duration longer than 9 months should be looked at with the possibility of doing a small follow-up contract to install, configure, and program the computer network. When upgrading the PC hardware and software use purchase orders with hired labor for installation or write small contracts with a system integrator. Trying to incorporate computer upgrades into another contract is usually not a good idea because of the different trades involved and the contract duration time. An important part of the successful procurement of a quality system is complete engineered plans and specifications that do not allow a contractor much room to substitute cheaper components or installation methods.

4.5.1.2 Programmable Logic Controllers. Having better stability than PC components, Programmable Logic Controller equipment will generally stay current on the market for 5-10 years. Once installed a PLC system should be expected to require complete upgrade every 10-15 years. However, it is critical at the time of project start-up to have a state-of-the-art PLC system. Therefore, if the construction contract exceeds one year in length, it may be worthwhile to leave the PLC system out of the contract and write a follow-up contract to install and program just the PLC system. In the big construction contract items such as raceways, cable trays, field devices, and even some field wiring can be put in place to minimize the effort of the PLC system installer. The first contract must be managed well to insure that everything is in place. Too often we rely on operational tests to tell us that the Contractor has completed all of his work and in this case the first Contractor may be long gone when the operational tests are performed. It is important to develop some in-house expertise on PLC systems to assist in administering both contracts and providing start-up, assistance, and long term maintenance to the lock. This will prove to be the key whether the control system is successful or not. Down the road, it will be mostly forgotten what problems occurred with administering the contract, but the reliability of the PLC system will always be an issue.

4.5.2 Computer Software. Not unlike computer hardware, software does not stay current for more than 3 years in most cases, and often is superceded by new versions within one year. It can be written in the specifications that the contractor has to provide the latest release of a particular software, but at some point the contractor has to purchase the software and that needs to be written in the specifications so that there is no dispute as to which revision is the latest at the time of purchase.

4.5.2.1 Operating System. The operating system software should be purchased at the same time as and by the same contractor as the computer system hardware. This will alleviate any compatibility problems between the operating system software and other software or hardware.

4.5.2.1 Man-Machine Interface Software. Man-Machine-Interface software should be purchased, the latest revision, at the same time that the PLC system is purchased. Upgrades should probably take place on a three-year basis with most MMI packages. Problems arise when operating systems, such as Windows NT, are revised to the degree that a plant's current version of the MMI software will not run on the new operating system software. These are times when a design engineer or software maintenance personnel have to be careful when upgrading software. Usually databases can be transferred when the MMI software is upgraded but not always. Before writing plans and specifications or a purchase order it is recommended that the designer have a thorough understanding of the marriage between the operating system software and the MMI as well as a thorough knowledge of what is available on the market at the time. All projects should program monies to upgrade the MMI software on a three-year basis.

4.5.3 Sensors. Non-electronic sensors such as dry contact vein operated limit switches, traveling nut limit switches, and magnetic limit switches can be purchased and installed in a large construction contract. However, if your construction contract exceeds one year in duration, consider purchasing encoders, pressure transducers, inclinometers, hydraulic cylinder position tracking devices, and other solid state sensors in a separate follow-up contract perhaps with the PLC/IPC system hardware. Again raceway and wiring can be put in place for these items but to insure that the latest revisions are acquired it may be best to purchase the sensors later.

4.5.4 Training. Training should be provided in all contracts and purchase orders. Generally a contractor will not raise his bid price too much to cover training, so consider putting a generous amount of training in your specifications package. Having said that, it is a good idea to put enough training, stressing quality and qualifications of instructor, to force the Contractor to put some extra money in his bid. This will ensure better training when the time comes. If you find the system is easier to operate and maintain you can always delete some training or reserve it for cross training personnel from other locks or projects. In as much as possible all training should be provided well in advance of equipment installation. It is a good idea to video tape all training to be used later as a reference and a training tool.

4.5.4.1 PLC/IPC System Training. The contractor's system integrator should provide the PLC/IPC system training. Schedule enough sessions for enough personnel to more than ensure that everyone gets sufficient training. Three things to include in the contract are number and length of training sessions, qualifications of instructors, and material to cover as well as training aids to furnish.

4.5.4.1.1 Hardware. The PLC hardware training should cover everything from simple I/O card installation and removal to termination of fiber optic and copper communication cables. Discussion should cover hardware diagnostics, interpretation of system LED indicators, automatic failover of communication channels, power supply connections, fuses, line conditioners, lightning protection and all other hardware located in the PLC I/O racks. The instructor should provide hardware similar to that used on the project and complete with power supplies, I/O cards, communication cards, and all equipment necessary to allow trainees to assemble a small PLC system ready to program as stated below. The IPC system hardware training should cover all connections to the chassis including network, printer, mouse, keyboard, and power. The discussions should cover the installation and removal of CPU, video, and network cards. The contractor should thoroughly discuss all connections to equipment such as routers, modems,

printers, hubs, and back-up tape drives.

4.5.4.1.2 Software. Software training should be included with the hardware training and accomplished on the same hardware during the same training sessions. This will help bridge the gap between the hardware and software.

4.5.4.1.3 Operating System Software. The software training should start with a thorough review of how to navigate the system operating software. Particular attention should be paid to how the system operating software interacts with the PLC programming software and the MMI software. System log-in and boot-up procedures should be shown. Passwords and restricted access should be discussed and explained. Location of directories and file storage folders for the PLC programming software and the MMI should be addressed in the training. Things such as operating screen file transfers and file back-up procedures should be discussed. Any special custom icons used to short-cut loading of the PLC or MMI software should be reviewed. The contractor should show how to re-load and configure the system operating software in the event of failure. This is usually a good time for government personnel to point out some features that they would like to see changed such as passwords, initial loading screens, profiles, etc. At this point a system integrator will usually make these changes at no additional cost because it does not impact the schedule. Sometimes these changes can be made during the training session, which enhances the quality of the training.

4.5.4.1.4 PLC Programming Software. The contractor should demonstrate how to install and configure the PLC programming software package. The training should cover complete I/O rack and slot addressing as well as communication software installation and configuration. PLC ladder logic should be developed for the mock PLC system developed as stated above. All common programming features such as coils, contacts, timers, counters, shift registers, LET, IF, and compare statements, GOTOs, and other common ladder logic notations. Documentation of the program should also be covered. An application should be developed for the training PLC system, loaded to the processor, and shown to be working.

4.5.4.1.5 Man-Machine-Interface Software. The same procedure should be followed for the MMI software training. After demonstrating how to navigate through the package an application should be developed for the training IPC/PLC system and shown to function properly.

4.5.4.2 Sensors Training. The contractor should provide training on all of the field devices including limit switches, pressure transducers, encoders, inclinometers and other input/output devices. The training should cover the installation and replacement of these devices as well as their respective interfaces to the PLC/IPC system.

4.5.4.3 CCTV System Training. It is very important to include in a construction contract sufficient training on the CCTV system. As with the IPC/PLC training the specifications should include three things, the qualifications of the instructor(s), the amount of training, and the topics to cover. The instructor should be an integrator who has commissioned CCTV systems at other projects with the same components. The instructor need not be a representative of the hardware manufacturer and in fact, the quality of training will probably improve if the instructor is an integrator who actually makes the equipment function rather than a manufacturer's representative. Specify enough training in the contract to force the CCTV supplier to build sufficient monies into

his bid. This is because large manufacturers will often tell electrical contractors during the bid process that they will provide the training at no cost if they use their equipment. In this case a salesman will come to the site and read from an operating manual. This is not quality training. If a supplier has to build some cost into his bid he will be more flexible in providing the training and, after award of the contract, quality rather than quantity can be stressed. Topics should cover everything from installation and configuration of all hardware and software to long term access and maintenance of the equipment. Constructing a mock system as part of the training is always a good way for maintenance personnel to learn the new equipment.

4.5.4.4 CCTV System. Closed Circuit Television equipment does not evolve as fast as computer hardware and software. However, if your contract duration is more than two years, it is best to furnish and install the CCTV equipment with a follow-up contract to ensure procurement of the latest technology. In all cases it is probably best to have a CCTV system supplier and integrator do the work. They should be a firm regularly engaged in providing, installing, and performing start-up and long term maintenance of CCTV systems. As with the IPC/PLC equipment, thoroughly engineered plans and specifications are the key to the procurement of a successful CCTV system.

4.5.5 Warranties and Service Contracts. Troubleshooting, repair, and long term maintenance of computerized control equipment is a critical part of a successful lock control system implementation. It is recommended that a plan for such action be in place prior to procurement of such equipment. Some things to consider are as follows.

4.5.5.1 Warranties. Most construction contracts include a one-year warranty on labor and materials. It is a good idea to have the contractor make written transfer to the Government of any manufacturer warranty on equipment covered by this manual. Some of these warranties may exceed one-year. Procure additional years of extended warranty with caution because there is a point of diminishing returns. Namely, some equipment will become outdated before it fails. Also, it has been shown that a majority of equipment failures occur within the first year or so of operation. Once the “wrinkles” are worked out of a system many of the components can be expected to last a reasonable amount of time relative to the time it takes for their obsolescence to drive replacement.

4.5.5.2 Service Contracts. Generally speaking it is better to provide in the construction contract a service agreement with the contractor’s system integrator as opposed to searching for a low bid third party to service the system. Limit this agreement to one year with the Government’s option to renew for a second year. By doing this the district will have a chance to evaluate the contractor’s performance. Specify in the service contract that it shall be the responsibility of the contractor to furnish spare parts, as he feels is necessary, above and beyond that specified in the original contract. Also, specify response and repair times as well as a list of Government points of contact to avoid confusion when problems arise. Require that the contractor make a full report of changes and procedures that were made to correct the problem, both temporary and permanent. This report should include all parts that were replaced.

4.5.5.3 In-house Maintenance. The best way to maintain systems such as these is through the use of well-trained in-house electricians and electronic technicians supplemented with help from district engineers when required. When personnel and budget restrictions allow, a district should

have at its disposal a crew of such personnel that can perform routine maintenance as well as emergency repairs at all of the districts locks. Busy locks may be able to justify a highly trained electrician/electronics mechanic dedicated to that lock. This is the best way to maintain the system. Keep in mind that in addition to the high skill level necessary to service computerized control systems, this person must have a thorough knowledge of fundamental electrical principles. This is important because the computerized control system is only a convenient "front end" to make operations and maintenance safer, more reliable, and more flexible. Beneath all of this is still the basic concept of electrical power transmission and conversion into mechanical work via a motor or solenoid. For this reason it is generally better to put a sound electrician through the proper training and upgrade them to an electronics technician, than to take a computer programmer and try to teach them fundamental electrical principles.

4.5.6 Testing and Startup. All construction projects should have testing and start-up procedures well defined in the contract requirements. All testing should be witnessed by Government representatives from engineering, construction, and operations. This will insure that the test procedures are correct, relevant, and that all hardware and software pass the test. Each system should be tested individually and then as a total lock control system.

4.5.6.1 PLC System. Require the contractor, prior to installation, to assemble a small system using their proposed PLC components to demonstrate how the system will work. This will also be a good training tool for district personnel. This should be done off site at the system integrator's shop to enhance the training aspects of the testing. Mixing training with testing at his point can be a good thing as long as there are clear requirements for each, as stated herein and above, provided for in the contract.

Once the system is in place at the lock, the contractor should be required to test each and every I/O point on the system, making a chart to verify that each point has been tested. This test should be done independent of field devices using dry contact switches and pilot lights for digital inputs/outputs, and function generators and meters for analog I/O. This will test the entire PLC communication network. The test should be performed using each of the redundant PLC communication channels. The Contractor should be responsible for correcting any and all deficiencies shown by the test. Field devices, such as limit switches, encoders, and transducers can be now be tested using the PLC system with confidence that the communication and I/O rack wiring are properly in place.

4.5.6.2 IPC System. At the same time as the PLC factory test, the system integrator should be required to set up a mini version of the IPC network. The network should include the PLC processor with all appropriate software to allow programming, troubleshooting, and execution of a ladder program and an MMI application. During this test, in the presence of Government personnel, at least one IPC should be "brought on line" from the ground up including the following.

- Connect all peripherals such as monitor, mouse, modem, etc
- Install the Network Cards.
- Install and configure Windows NT operating software.

- Verify communications with all other network devices.
- Install and configure all PLC programming software.
- Install and configure all MMI programming software.

After this has been done, the system integrator should demonstrate that numerous large files and directories can be copied over the network with speed and accuracy. At the same time as the PLC factory test a mock ladder program and MMI application should be developed to insure compatibility of all hardware and software. Again this test procedure also serves as a good training exercise for Government personnel.

After the system is in place at the locks, all network communications should be verified again to check all field wiring. Knowing from the factory test that all network software parameters are configured correctly will aid in determining start-up problems at the site. While testing the PLC I/O points a test MMI application can be used. This will make the I/O testing easier as well as demonstrate further that the IPC network is properly in place.

4.5.6.3 Field Devices. Immediately after installation, the contractor should check all field devices using meters to determine that they have freedom for necessary motion, put out the correct signal when input power is applied, operate correctly with the movement of machinery, and are protected from operations, debris, and weather. After all I/O points have been checked, field devices should be wired to the I/O racks and tested using the PLC/MMI network to verify that all field device outputs are compatible with the PLC system.

4.5.6.4 Total System. After the above tests have been successfully completed and the lock machinery is ready to be moved the entire system should be checked for proper operation. All systems should be checked as follows:

4.5.6.4.1 Water Level Sensing System. Because it is used as a safety interlock, the water level sensing system should be tested prior to operation of any lock machinery. Each water level sensor should first be checked for a proper and accurate level as displayed on the MMI operating screen. Because the transducer itself has been tested previously this test should concentrate more on the decoding in the ladder logic. Require the contractor to verify that the level displayed corresponds to water level changes. In the case of a submersible pressure transducer raise each unit exactly one foot and verify that the level displayed responds accordingly. Repeat this step through several feet and back down again. While not the most accurate test, this will give a very good indication that the unit and programming are responding correctly. Fine tuning the calibration can be done when the lock chamber is filled and emptied and large changes in water level can be tested.

4.5.6.4.2 Lock Gates. Motor rotation should always be checked prior to movement of any equipment. When all limit switches and safety interlocks have been tested and verified for proper operation, the contractor should begin moving each lock gate one at a time in slow speed. Immediately check to insure that the position displayed on the MMI screen is responding correctly. The contractor should stop and restart the gate from several different positions to insure that the machinery starts in slow speed and changes speeds correctly. All limit switches, including over travels, should be checked for proper operation and indication. Each gate should be run through a minimum of ten cycles for testing purposes. Miter gates should be run together after it

is shown that each leaf operates correctly. The position indication should be monitored continuously for any glitches or spikes. End-of-travel limits should be checked for proper mitering and recessing of the gates. Bubbler system compressors and solenoids should be checked for proper operation and indication.

4.5.6.4.3 Culvert Valves. The same basic procedure for the miter gates should be followed for start-up and testing of the culvert valves.

4.5.6.4.4 Dam Gates. After rotation has been checked the dam gates should be individually operated through as much of their full range of travel as pool conditions will allow. If possible, placing stop logs will give the contractor the chance to test the full range of travel of the gates. All limit switches and over travels should be checked for proper operation. Again, the position readout of the gate on the MMI should be monitored for proper response to the movement of the gate. The contractor should periodically stop the gate and verify the position against a known benchmark such as a staff gauge.

4.5.6.4.5 Lock Lighting. All PLC-controlled lighting systems should be checked for proper operation and indication. Feedback indication on the MMI screens should be from auxiliary contacts on the lighting contactors. Integrators often will use PLC output status as an indication of light operation, but this is reliable feedback. Traffic lights should also be tested for proper operation. The contractor should verify that the traffic light changes to red when the lock gates close.

4.5.6.4.6 Alarms. All alarms such as transducer failure, fire and smoke detectors, motor overload, machinery overtravel, communications fault, power failure, etc. should be simulated and checked for proper indication on the MMI screens.

4.5.6.4.7 Remote monitoring and troubleshooting capabilities of the system should be tested by the contractor for proper operation and security.

4.5.6.4.8 Miscellaneous Control Features. Miscellaneous control features unique to each lock should be checked for proper operations. When all of these systems have been verified to function properly the Contractor should run the lock through several (at least five) complete lockage cycles utilizing all of the equipment mentioned above. Pay particular attention to the position indication of the gates and valves, and the level readouts for the pool, tailwater, and chamber water level sensors. Make sure that the “pools equal” interlock is functioning correctly at each end of the lock. It is usually better to specify requirements for extra testing rather than not enough. A contractor will usually not add too much to his bid to cover testing but will always try to reduce the amount of testing when the project comes to an end. This test procedure may be the last chance to have the contractor correct some deficiency so it is important to be clear about the amount of testing the Government requires.

4.5.7 Documentation. The contractor should be required to provide complete system documentation for all hardware and software used on the system.

4.5.7.1 IPC Network. The documentation should show all network and communication parameters and should include detailed drawings showing the complete Ethernet network including all IPCs, PCs, modems, routers, fiber optic equipment, communication cables, hubs,

transceivers, network cards, video and sound cards, data storage devices, uninterruptible power supplies, and other network equipment. Manufacturer names and model numbers should be shown for all devices.

4.5.7.2 PLC Network. The contractor's system integrator should provide drawings showing the complete PLC network with all I/O racks and cards, fiber optic converters and power supplies, lighting panels, adjustable frequency drives, network communication equipment, power supplies, uninterruptible power supplies, and other equipment. The drawings should show all manufacturer names and model numbers, how all devices are interconnected, and all PLC network addresses including addresses for each individual I/O rack slot. A list should be provided showing the location, address, type, designation, tag, and purpose of every I/O point in the system.

4.5.7.3 Ladder Logic and MMI Applications. The system documentation should include complete up-to-date listings of the entire ladder logic program with all I/O points, cross-referencing, and labels list. The MMI software documentation should include a cross reference of every I/O point monitored, a list of all tags showing type and designation, and a printed copy of every operating screen. All software configurations necessary to establish proper communications with the PLC processor should be included in the documentation.

4.5.7.4 Field Devices. The contractor should include a complete listing of every transducer, encoder, limit switch, photocell, motion detector, and other field devices. The documentation should include manufacturer names and model numbers, voltages, input and/or output parameters (if selectable), dip switch settings, wiring, power supplies, and all information relative to the job.

4.5.7.5 Input/Output Rack Wiring. The contractor should include as-built documentation of all equipment and wiring in each I/O rack enclosure. This information should be detailed enough to show point-to-point wiring with terminal board designations for all connections.

4.6 Power Supply.

4.6.1 General. The electrical power supplys quality will effect how efficient the lock operates and its operating available. As for most industry applications, the electrical power supply should be three-phase, rated 480/277-volt, with an ampacity rating not less than the estimated maximum demand plus 15 percent for future growth. Wye-connected systems allow the ability to quickly identify and locate a faulted circuit in a widely dispersed area. Further guidance on rights-of-way, ownership, operation, etc., of the transmission line and substation may be found in TM 5-811-1, Electric Power Supply and Distribution.

4.6.2 Configurations. Possible configurations for the lock's power supply system are radial system or network system.

4.6.2.1 Radial System. A radial distribution system has only one simultaneous power flow path to the load. This is the lowest cost system and the system with the lowest reliability. A single point failure can leave the lock without electrical service.

4.6.2.2 Network System. A network distribution system has more than one simultaneous power flow path to the load. There are several variations for network distribution systems. In general, a system with more redundancy tends to be more reliable. That is not to say that

redundancy in its self will increase reliability. Single point failures do not necessary leave the lock without electrical service. Redundancy comes with a higher price. A network distribution system is more difficult to operate that of a radial distribution system.

4.6.2.3 Considerations. The loss of a station service source, either through switching operations or due to protective relay action, should not leave the lock without electrical service. In general, the usage of a radial feed should be limited to projects where either the economics or characteristics of the protected property do not justify or require a more expensive network. A fully redundant network such as a system with two full-capacity transformers, two station service busses, and a tiebreaker between the busses offers a better system. Even though each transformer is capable of carrying the locks entire load, the distribution system should be configured for normal operation with approximately one-half the load on each bus. In the event that one supply transformer fails, an automatic transfer of load via the bus tiebreaker will quickly restore electrical service to the effected bus.

4.6.2.4 Recommendations. The station service system should have a minimum of two, redundant power sources with a bus tiebreaker between them. This duo-end with bus tiebreaker power configuration dramatically improves power supply availability over a simple, radial distribution system.

4.6.3 Estimating Station Service Load.

4.6.3.1 Transformer Ratings. The station service transformer ratings should be developed from the expected maximum demand. The expected demand may be determined from a total of the feeder loads with an appropriate diversity factor, or by listing all connected loads and corresponding demand loads in kVA.

4.6.3.2 Demand Factors. Demand factors used for developing station service equipment capacities can vary widely due to the type of plant (i.e., high head stand-alone power plant versus low head power plant integrated with a dam structure and navigation lock). Development of demand factors for unit auxiliaries should account for the type of auxiliaries in the plant based on trends observed at similar plants.

4.6.3.3 Load Growth. Station service systems should be designed to anticipate load growth. Anticipated growth will depend on a number of factors including size of the lock, and location.

4.6.3.4 Capacity Deficits. Capacity deficits in station service systems have not been caused by the designers inability to predict lock auxiliary requirements. However, unforeseeable added demands from providing service for off-site facilities, which are typical of multipurpose projects, have caused problems with station service capacity. Examples of this have been the development of extensive maintenance and warehouse facilities outside the lock, or electrical requirements resulting from environmental protection issues such as fish bypass equipment. The station service design should have provisions for unanticipated load growth for multipurpose projects with navigation locks and fish ladders.

4.6.4 Transformers. The designer should give serious consideration to requiring the utility company own the main power transformers and maintain them. It is true that by accepting power at distribution voltage levels (i.e., 2,400, 4,160, 12,470, or 13,800 voltages) instead of at

utilization voltages (120/240, 480, or 480/277 voltages), that most utilities can offer lower cost per kilowatt-hour. This is due to fact that most metering is at the utilization level and does not include the transformer losses which the utility adjusts its rates so a to pass these costs on to the customer. By accepting the power at distribution voltage levels, the utility has no need to adjust for transformer losses that they do not occur. However, if the lock owns the transformer, the lock will have to perform all maintenance on the transformer. This maintenance will require specialized tools, materials, and electrician skills level that would not otherwise be required at the lock. The utility will normally be better prepared to perform these maintenance actives over what the lock's maintenance crew could handle. In the event of major damage to a main power transformer, the utility normally should be able to replace a damaged transformer faster than the lock personnel could. Since maintaining and operating a distribution system is the utility main job, the utility would be logical choice for maintaining the main power transformers because they have the training, materials, and tools to this type of work.

4.6.5 Station Service Switchgear. Metal-enclosed switchgear with 600V, drawout, power, air circuit breakers should be used for each supply and bus tiebreaker. The switchgear should be located near the station service transformers. A complete station service supply and distribution system should be provided to furnish power for station, lock auxiliaries, lighting, and other adjacent features of the project.

4.6.5.1 Power Circuit Breakers. Each supply and bus tiebreaker should be electrically operated for remote operation from the control room in attended stations. Normally, the supply breakers should be interlocked with the bus tiebreaker so that only two breakers can be closed at any one time. This interlocking scheme is to prevent paralleling the two supply transformers. If the two supply transformers are paralleled, the result is a higher available ground fault current. This would possibly increase the maximum interrupter rating for the switchgear and would increase the cost.

4.6.5.2 Remote Control. As a minimum, bus voltage indication for each bus section should be provided at the remote point where remote plant operation is provided. Transfer between the two normal sources should be automatic. Transfer to the emergency power sources should also be automatic when both normal power sources fail. Feeder switching is performed manually except for specific applications.

4.6.5.3 Duplicate Feeders. Duplicate feeders (one feeder from each station service supply bus) should be provided to important load centers. Appropriate controls and interlocking should be incorporated in the design to ensure that critical load sources are not supplied from the same bus. Feeder interlock arrangements, and source transfer, should be made at the feeder source and not at the distribution centers. All of the auxiliary equipment for a main unit is usually fed from a motor control center reserved for that unit. Feeders should be sized based on maximum expected load, with proper allowance made for voltage drop, motor starting inrush, and to withstand short-circuit currents. Feeders that terminate in exposed locations subject to lightning should be equipped with surge arresters outside of the building.

4.6.5.4 Load Centers. The distribution system control should be thoroughly evaluated to ensure that all foreseeable contingencies are covered. The load centers should be located at accessible points for convenience of plant operation and accessibility for servicing equipment.

Allowance should be made for the possibility of additional future loads. Protective and control devices for station auxiliary equipment should be grouped and mounted in distribution centers or, preferably, motor control centers. The motor starters, circuit beakers, control switches, transfer switches, etc., should all be located in motor control centers.

4.6.5.5 Relays. An overlapping protected zone should be provided around circuit breakers. The protective system should operate to remove the minimum possible amount of equipment from service. Overcurrent relays on the supply and bus tiebreakers should be set so feeder breakers will trip on a feeder fault without tripping the source breakers. Ground overcurrent relays should be provided for wye-connected station service systems. The adjustable tripping device built into the feeder breaker is usually adequate for feeder protection on station service systems using 480V low-voltage switchgear.

4.6.5.6 Control and Metering Equipment. Indicating instruments and control should be provided on the station service switchgear for local control. A voltmeter, an ammeter, a wattmeter, and a watthour meter are usually sufficient. A station service annunciator should be provided on the switchgear for a large station service system. Contact-making devices should be provided with the watthour meters for remote indication of station service energy use. Additional auxiliary cabinets may be required for mounting breaker control, position indication, protective relays, and indicating instruments.

4.6.5.7 Emergency Switching. The station service switchgear should have a sectionalized bus, with one section for each normal station service source. Switching to connect emergency source power to one of the buses, or selectively, to either bus should be provided. If the emergency source is only connected to one bus, then the reliability of the station service source is compromised since the bus supplied from the emergency source could be out of service when an emergency occurred. It is preferable that the emergency source be capable of supplying either bus, with the breakers interlocked to prevent parallel operation of the buses from the emergency source..

4.6.6 Emergency Power. Locks should be equipped with an engine-driven generator for emergency standby service with sufficient capacity to operate the spillway gate motors and essential auxiliaries in the dam. Any emergency source should have automatic start control. The source should be started whenever station service power is lost. The emergency source control should also provide for manual start from the plant control point. It is also important to provide local control at the emergency source for non-emergency starts to test and exercise the emergency source. A load-shedding scheme may be required for any emergency source, if the source capacity is limited.

4.6.7 Other Considerations.

4.6.7.1 Electrical Room. The Electrical Room should contain adequate floor space for all electrical equipment and should be constructed for noise reduction where necessary. The designer should be fully aware of the National Electrical Code (NEC) requires for working space around electrical equipment.

4.6.7.2 Facility Considerations. The design should have adequate lighting and potable and

wastewater treatment facilities. Also, the buildings should provide safe and adequate facilities for visitor access (including persons with disabilities as required by regulation) as well as the features needed for efficient lock operation.

4.6.7.3 Safety Features. Among these features, designing for safety and fire resistance is of primary importance. The design for safety should comply with EM 385-1-1, and it should satisfy local ordinances.

4.7 Onsite Wireless Control.

4.7.1 General. It is preferable to conduct lockage operations from the control room/station where the lock operator has access to all controls and communication systems. However, it may be desirable to operate certain equipment, such as a tow haulage system, from outside the control station on the lock wall to improve line of sight and safety. The Engineer Research and Development Center, Construction Engineering Research Lab (ERDC-CERL) conducted research to determine the viability of onsite wireless command, control and monitoring of lock operating equipment to operate tow haulage systems and for local operation of lock equipment during maintenance procedures. This section provides general information about the results of the research. ERDC/CERL TR-01-40 report titled "Demonstration of Onsite Wireless Control of Lock Operating Machinery" provides detailed information about the results of the research and specification information for the wireless system's components. Two types of onsite wireless control systems were investigated.

- Wireless control/feedback system transported on a motorized cart.
- Handheld wireless control system that could easily be carried by lock operators and maintenance personnel.

This technology was demonstrated at Barkley Lock and Dam in Nashville District. Barkley Lock is 800-ft long x 110-ft wide with a 57-ft lift. The vertical viewing distance is approximately 80 ft. Normally, Barkley Lock has only one operator on duty per shift, and has operated this way for the past 30 years.

4.7.2 Cart-Mounted Wireless Control. The cart-mounted wireless control system consists of a small, lightweight control panel with touchscreen operator interface (OI) control and a wireless modem that enables the transmission of control commands directly to the PLC. Headwater, tailwater and chamber water levels, and filling and emptying valve status can be monitored, and tow-haulage machinery operated. The cart provides mobility that enables the lock operator to control lock machinery from any point along the lock wall, including terminating the operation if any unsafe condition happens.

As shown in Figure 4-12, the wireless system consists of a cart-mounted master controller that contains a touchpad and screen that continuously displays the feedback information transmitted from the PLCs, and a wireless modem, operating in master configuration. It transmits lock machinery commands to a second wireless modem, operating in a slave configuration, which is connected to the PLC and provides feedback data on machinery position and performance. The carts' 12-volt batteries provide the necessary power for the modem and master controller.

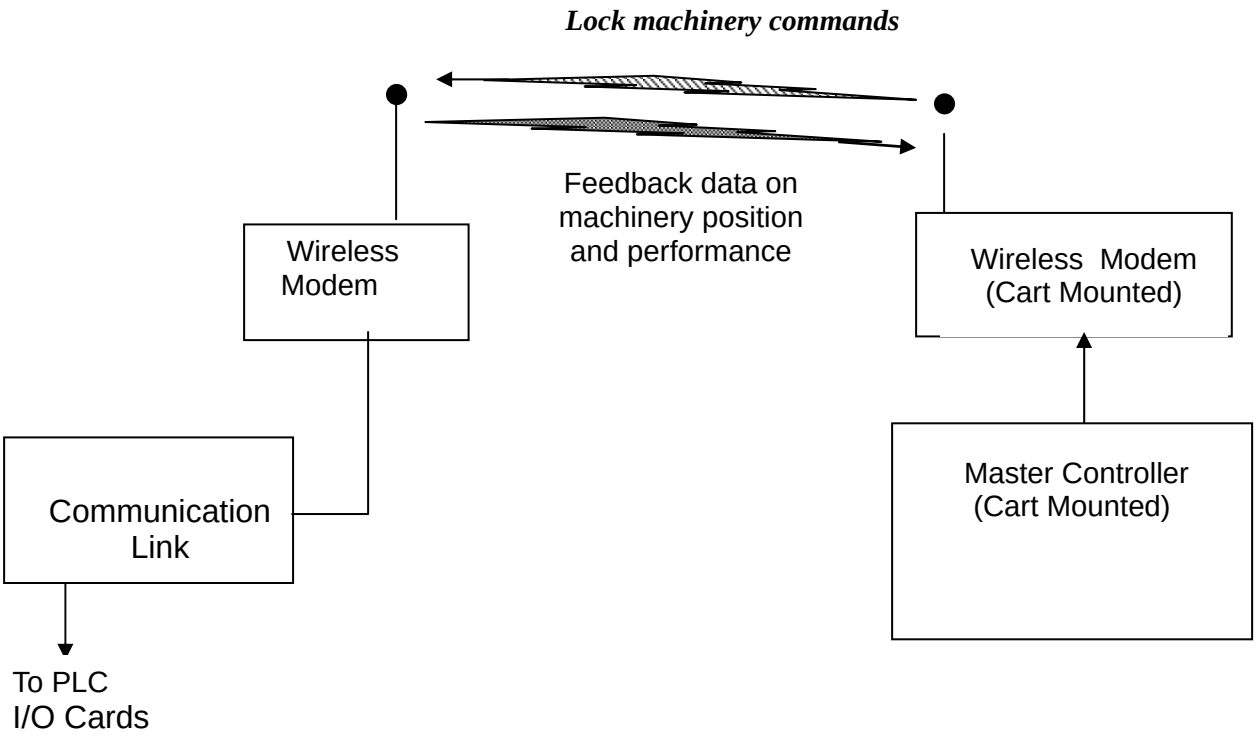

Figure 4-12. Configuration for Onsite Wireless Control

4.7.3 Handheld Wireless Control. During most maintenance procedures, the operator is close to the equipment to be controlled and needs to be able to start and stop equipment intermittently. A handheld remote controller designed to control a particular piece of equipment can provide the necessary control for such operations and it also protects the maintenance technician who is working on a piece of equipment that could be accidentally activated by someone in the control room several hundred feet away.

The handheld wireless system consists of a portable handheld transmitter and a receiver that can be mounted at some central location (e.g., in the equipment room or gallery). This system does not feed back lock data information (i.e., it provides the operator with control only and is similar to the operation of most television remote controllers in the home). When maintenance personnel are performing activities in cramped spaces, they can operate gates and tainter valves via wireless control. A schematic diagram of the control system is shown in Figure 4-13.

The receiver's relay contacts are wired to PLC input cards that communicate with the PLC processor, which in turn communicates with the PLC output cards to start or stop machinery or electronic equipment. The receiver can receive commands from the handheld transmitter and instruct the PLC's output cards to activate and de-activate equipment on command. The transmitter can be used to control equipment inside the gallery area during maintenance operations as long as the operating equipment is within 800 feet of the receiver.

This system may be used at locks where equipment is controlled through either conventional relays or PLCs. It can operate gates, valves, pumps on river or landsides, traffic signals, and control the speed of the gate or valve opening or closing (e.g., increased from slow to fast).

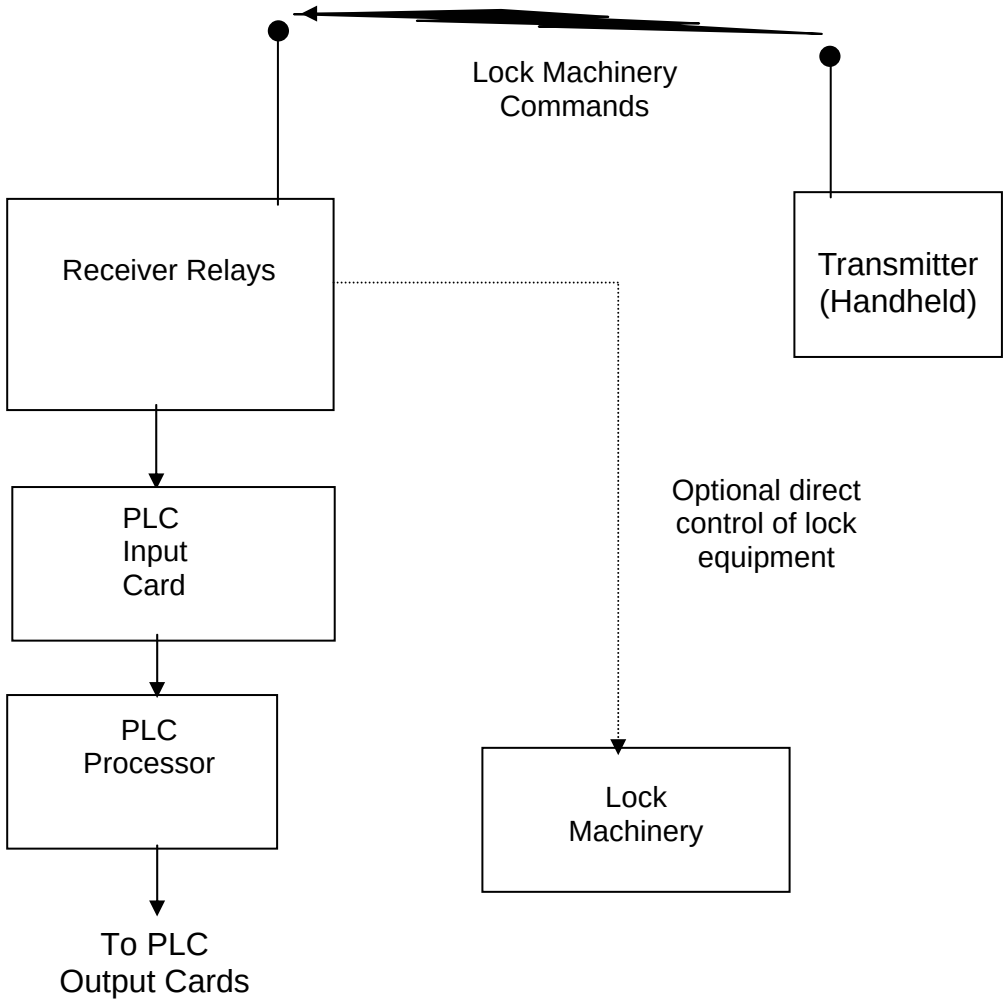

Figure 4-13. Configuration for Handheld Wireless Control

Although the size of the handheld transmitter makes it convenient and portable, it limits the unit's power capacity. This limited capacity confines the range of nominal operation to about 800 feet, and transmitter and receiver must be positioned within "line of sight" of each other. The handheld wireless control system is limited to fairly short-range operations or control, and cannot be used in situations where the signal must be transmitted from the lock wall down to the gallery area. The system is useful for maintenance operations within the lock's gallery when the receiver is positioned there. The handheld transmitter uses three 1.5-volt AA batteries as a power source.

From a practical maintenance standpoint, to ensure movement of only the desired piece of equipment, it is safer to limit the number of systems or pieces of equipment to be controllable at any one time from a single handheld remote, especially considering the lack of feedback. Functioning of existing hard-wired safety interlocks and meeting requirements of lock-out, tag-out regulations during maintenance must still be employed.

CHAPTER 5
System and Component

5.1 General Design Criteria
- 5.1.1 Machinery Component Criteria
- 5.1.2 Standard Manufactured Products
- 5.1.3 Bearings
- 5.1.4 Brakes
- 5.1.5 Couplings
- 5.1.6 Efficiencies.
- 5.1.7 Force Control Limit Switches.
- 5.1.8 Torque Limiting Devices
- 5.1.9 Open Spur Gears
- 5.1.10 Round Link Chain
- 5.1.11Shafts
- 5.1.12 Sheaves
- 5.1.13 Speed Reducers
- 5.1.14 Wire Rope
- 5.1.15 Anchor Bolts
- 5.1.16 Fused Bolts
- 5.1.17 Keys, Pins and Splines
- 5.1.18 Redundancy

5.2 Hydraulic Fluid Power
- 5.2.1 General Description and Application
- 5.2.2 Hydraulic Systems - General
- 5.2.3 Hydraulic Components - General
- 5.2.4 Hydraulic Cylinders - General
- 5.2.5 Hydraulic Motors - General
- 5.2.6 Hydraulic Pumps - General
- 5.2.7 Control Valves - General
- 5.2.8 Reservoirs- General
- 5.2.9 Manifolds
- 5.2.10 Filters
- 5.2.11 Accumulators
- 5.2.12 Piping
- 5.2.13 Hydraulic Fluid
- 5.2.14 Gauges 5.2.15 Special Design Considerations

5.3 Lubrication

5.4 Fire Protection

5.5 Ice and Debris Control
- 5.5.1 Gate Heater
- 5.5.2 High Volume Bubbler Systems

5.6 Safety

5.7 Corrosion Protection
- 5.7.1 General
- 5.7.2 Hydraulic Systems

CHAPTER 5
System and Component

5.1 General Design Criteria.

5.1.1 Machinery Component Criteria. All components of lock gate operating equipment should be designed for the maximum normal full load torque of the electric motor, or the maximum effective hydraulic actuator pressure, with a minimum factor of safety of five (5.0) based on the ultimate tensile strength of the material. All components should be designed for a unit stress not to exceed 75 percent of the yield strength of the material, using the locked rotor torque rating of the electric motor, or the maximum hydraulic actuator pressure available through the control system. A fracture mechanics/fatigue analysis should also be performed which may place a lower limit on the percentage of yield strength that should be used. Components, which may fail in buckling compression, should be designed for a minimum factor of safety of three (3.0), using the Euler or J.B. Johnson formulas, as appropriate. These criteria determine the maximum allowable stresses for all components. Components used as fuses, such as some shear bolts, keys, torque-limiting couplings, etc. will not be designed to this criteria.

5.1.2 Standard Manufactured Products. All standard manufactured products should be selected based upon the manufacturer's published catalog ratings, or actual data procured by correspondence with all known major manufacturers of that type of component. The intent is to provide for full, open competition for standard manufactured items, while permitting the designer to use available data to provide a fully functional design. Plans and specifications should be performed in a manner that defines a range of performance obtainable by a majority of the manufacturers.

5.1.3 Bearings.

5.1.3.1 Antifriction Bearings. Ball, roller, tapered roller and spherical roller bearings should be selected in accord with the manufacturer's published catalog ratings of the group, type and size required. Bearing life should be designed as a B-10 life of 10,000 hours with a maximum design load of 75 percent of the maximum bearing Basic Dynamic Capacity (BDC) rating. Bearings, which remain static for extended periods, should be designed with greater safety factors, using the Basic Static Capacity (BSC) rating. Proper seals and lubricant design are essential to adequate performance. Only one fixed mount bearing should be used on shafts with multi-bearing installations to permit thermal expansion in the axial direction. Manufacturers should be consulted for typical axial capacities of the bearings.

5.1.3.2 Plain Bearings. Plain bearings, also identified as sleeve bearings, bushings, etc., should be designed for a maximum normal bearing pressure of 6.9 MPa, (1000 psi) except for bearings operating below five (5) revolutions per minute. Under special, slow speed, uniform load conditions, the bearing pressure may be designed for up to 27.6 MPa. (4000 psi). Bearing materials should be specified as Alloy C90500, for most slow to moderate speed applications, in accord with ASTM B271, ASTM B505, or ASTM B584. Special materials, or pressure designs, should be coordinated with several manufacturers to insure adequate competition is available.

The length to diameter ratio (L/D) should be designed close to unity (1.0), considering the bearing pressure required, in order to minimize wear and misalignment. Some consideration should be given to spherical plain bearings for such things as tainter gate trunnions, bellcranks, struts and other partial rotation, slow motion joints. Spherical bearings minimize wear between pins and bushings by accommodating modest misalignment.

5.1.3.3 Pillow Blocks. Pillow blocks should be cast iron, cast steel, or fabricated from forged steel. Pillow blocks should be designed to provide full radial and axial capacity in all directions. Mounting bolts, nuts, etc. should be rated for the full BSC in all directions, including upward through the cap. Slotted mounting holes may be used for the base, as required, but dowel pins or keeper bars should be permanently installed after final alignment and testing. Only one fixed mount pillow block should be used on shafts with multiple pillow block installations to permit thermal expansion in the axial direction.

5.1.3.4 Pintle Bushing.

5.1.3.4.1 Pintle bushings for lock gates traditionally have been grease lubricated aluminum bronze. The aluminum bronze alloy used is typically C95400 meeting the requirements of ASTM B148 or ASTM B271. Plate B-51 provides recommended grease groove and seal details. The aluminum bronze bushing is press-fit into the pintle socket and secured by bolting to the socket. The bearing surface should be finished truly hemispherical and the pintle balls fitted to the bushings by scraping or lapped until uniform contact is attained over the entire bearing surface. This can be determined by testing with carbon paper or similar media transfer technique. The pintle and bushing need to be match-marked. Show finish surfaces on the drawings in accordance with ASME B46.1. Determining compliance with surface requirements is typically done by sense of feel and visual inspection of the work and comparing it to the Roughness Comparison Specimens of ASME B46.1. Paragraph 2.1.7 and Plates B-53 and B-54 provides additional information. Grease lubricated bronze continues to work well but environmental issues, created by pumping grease to the pintle bushing, has caused us to also consider using self-lubricated pintle bushings.

5.1.3.4.2 Self-lubricated bearing material, also known as composites, has been produced for many years, but the Corps has been reluctant to recommend its use for pintle bushings since some Corps projects have experienced composite bearing failures. The Construction Engineering Research Lab (CERL) has conducted a number of research projects to study the performance of self-lubricating materials, first for hydropower application and more recently for navigation lock and dam application. Some materials and arrangements have worked better than others. The composite is typically fitted in a bronze housing through interference fit and fasteners. The pintle is typically manufactured of cast steel with bearing surfaces of stainless steel deposited in weld passes to a thickness of not less than 4.8 mm (0.1875 inch) and machined to the required shape. When considering the use of self-lubricated pintle bushing, the reports produced by CERL should be reviewed, especially draft report titled: Field Evaluation of Self-Lubricated Mechanical Components for Civil Works Navigation Structures. Selecting the correct type of self-lubricated bushing, specifying the proper design criteria, i.e., composite thickness, surface finish, interference fit, clearance fit, etc., for each particular application is

critical to ensure a successful installation. The draft CERL report identifies Corps lock and dam projects that have used self-lubricated pintle bushings. Most installations are relatively recent and long term results are still unknown. Designers should contact the districts identified in the CERL report to get an update on the information provided in the report. The better performing bearing manufacturers identified in the report should be consulted about recommendations to select the best bushing arrangement and specify design criteria to best suit each application. Successful use of composites for pintle bushings is still evolving and districts considering its use should proceed with caution.

5.1.4 Brakes. Holding brakes should be the shoe type, spring set, with DC magnet operated release. Brakes should have a minimum continuous duty torque rating of 150 percent of the maximum full load torque rating of the electric motor, or hydraulic actuator, as applied to the brake wheel. Fuses should not be used in the brake control circuit. AC-rectified brakes are acceptable. Brakes should be mounted in a watertight and dust-tight enclosure, with a heater, manual release devices, limit switches, indicators and electrical connections, as required by the operating environment. UFGS 16905A provides specification requirements for brakes.

5.1.5 Couplings. Flexible couplings should be the gear type. Couplings should be selected using the manufacturer's published rating. Couplings should have steel housings, with integral lips to contain the seals and retain the sleeves. Sleeves should be fastened such that they cannot slip or loosen. Couplings, which use snap rings to hold the sleeves, should not be permitted.

5.1.6 Efficiencies. The following operating efficiencies should be used as a design guide.

Silent Chain (including oil-retaining case)	97%	
V-belts (including drive/driven sheaves)		90%
Spur Gear Reduction Unit (up to)		
1:1 to 16:1	88%	
16:1 to 40:1	84%	
40:1 to 150:1	78%	
Helical, Herringbone or Planetary Reduction Unit		
Single Reduction	97%	
Double Reduction	95%	
Triple Reduction	90%	
Quadruple Reduction & Worm Gear Reduction Unit	[1]	
Spur Gear Set	97%	
Bevel Gear Set		95%

[1]Certified starting and operating efficiencies should be obtained from manufacturers' data for the normal operating speeds. Special operating conditions, such as high or low ambient temperatures, or lubricant heaters, should be coordinated with the manufacturers' engineering department. The lowest efficiency obtained from a minimum of three standard manufacturers should be used.

Bearings	
Ball and Roller	98%
Bronze Plain Bearings (> 5 rpm)	95%
Bronze Plain Bearings (< 5 rpm)	93%

5.1.7 Force Control Limit Switches. Force control limit switches can be used to control overloads in multi-part reeved wire rope hoists. The device can be installed between the wire rope and the dead end anchorage of the reeving. High, and low, force control limits can be set with backup trip switches for each limit. A switch can be set for high loads, such as locked rotor torque upon seizing of a gate in its operating slot, while a second switch is set higher as an emergency backup device. A low load switch can be set for the load encountered in raising due to a seized sheave. Low load, at the end anchorage, would be indicative of an overload in the portion of the wire rope from the sheave nest to the drum. The main limit switches interrupt the control circuit, while the backup switches de-energize the hoist. The forces are determined by calculating the wire rope tension that would be produced by the maximum load used in the design of machinery components. Backup switches are typically set at approximately 900 kg (2,000 pounds) differential from the primary switch.

5.1.8 Torque Limiting Devices. Slip clutches can be used to protect gate operating mechanisms by limiting the maximum motor torque applied to them. Multi-plate slip type clutches with fiber type friction discs are recommended. They should be adjustable and use coil springs. Slip clutches are normally rated for 200 percent of the maximum calculated torque requirement, and should be adjusted to provide slightly more torque than required. However, the manufacturers recommendations should be considered for both sizing and adjustment. The torque capacity requirement is minimized if the clutch is located on the motor side of the speed reducer. Heat rejection capacity is not an important consideration as the device would not be expected to slip, except for very short periods. The designer should provide protection from the elements and oil or grease.

5.1.9 Open Spur Gears. Open gears should have spur teeth of the involute form, in compliance with applicable American Gear Manufacturers Association standards. Basic strength should be based upon the static load from the Lewis equation, as modified by the Barth Equation (design stress = Lewis stress x 600/(600 + pitch-line velocity-fpm). Large spur gears should be designed with forged steel rims in accord with ASTM A290, while the hubs and arms can be cast (ASTM A148), or fabricated from rolled steel plate. Large spur gears may be split radially, along two of the support arms, in order to permit more convenient handling and removal. The split line can be fastened by high strength bolting materials, designed for the maximum loads on the gear. Pinions should be fabricated from ASTM A291 forged steel. Pinion gear teeth should have a hardness of approximately 50 Brinell Hardness Number (BHN) greater than the driven gear teeth to equalize wear. Gears should not be overhung on shafts, including speed reducer shafts.

5.1.10 Round Link Chain. See Chapter 3 for a detailed description of round link chain design applications.

5.1.11 Shafts. Shafts should b designed for the machinery component criteria. The design

criteria for all shafts should be the ASME Shafting Code equations with torsional and bending factors for heavy shock loading. The ASME Shafting Code requires additional stress reduction factors for keyways in the shaft. Stress concentration factors should be used, where applicable. Shafts should be fabricated from forged steel, such as ASTM A668. Shafts should be supported at locations required to minimize bending and axial movement yet allow for thermal expansion. The maximum bending moment deflection should be less than 0.83 mm/meter (0.01 in/ft) of length at the maximum rated load. Torsional shaft deflection should not exceed 0.26 degree/meter (0.08 degree/ft)of shaft length at the maximum rated load. Where spur gears are mounted on separate shafts, the relative slope of the shafts, at the centerline of the gear mesh, should not exceed one-third (1/3) of the gear backlash divided by the smallest gear face width. The typical backlash for spur gears is 0.03/DP to 0.05/DP, where DP is the diametral pitch.

5.1.12 Sheaves. Sheaves should be heat-treated cast steel, ductile iron, or manganese steel. Each sheave should have a groove and pitch diameter that corresponds to the recommended factors for the mating wire rope. The hubs should be fitted with plain bearings or roller bearings with appropriate lubrication fittings. The sheave flange, rim thickness, web thickness, angle of contact, and inside diameter of the hub dimensions should be in accord with the standard manufacturers' typical product for the appropriate size and construction of wire rope. The choice of a larger sheave diameter, for a given nominal wire rope size, improves fatigue life and reduces bending stress for the wire rope.

5.1.13 Speed Reducers. Speed reducers should be helical, herringbone, spiral bevel, or worm type in accord with the applicable AGMA standards. Speed reducers should be selected based upon the manufacturers' published ratings, including service factors, for the required operating conditions. Special shaft diameters, or lengths, are available from most major manufacturers, as required. All speed reducers should be equipped with anti-friction bearings. Overhung loads on speed reducer shafts should be discouraged, unless available space is severely limited by design circumstances. Speed reducer lubricants, for the bearings and the gear sets, should be chosen for operation in the existing ambient conditions. Where ambient conditions will exceed the normal lubricant recommendations for the type of speed reducer required, a thermostatically controlled unit heater, or heaters, should be provided in the reducer enclosure. Heating elements should have a maximum watt density of 1.5 watts per square cm (10 watts per square in.). Synthetic hydrocarbon lubricants may be an acceptable oil alternative, as approved by the speed reducer manufacturer for the normal loads and speeds encountered in service. A separate lubricating oil pumping system, which sprays all gears, and non-greased bearings, should be provided for speed reducers that operate infrequently, or will be placed in extended storage. Speed reducers should be specified with a lubricant thermometer, a level gauge, and a hygroscopic oil breather.

5.1.14 Wire Rope. Round wire rope is the typical product used for gate operating machinery. It is constructed to close dimensional tolerances with higher resistance to wear and mechanical damage than flat wire rope (woven wire rope with a rectangular cross-section). Wire rope selection criteria are provided in EM 1110-2-3200. Socket design is an important consideration to the implementation of wire rope installations. Epoxy products provide a viable alternative for the field installation of wire rope into sockets, but they require tighter tolerances on the openings in the sockets through which the wire rope must pass. Standard "zincing" can be very reliable, but does face galvanic corrosion problems in submerged or wet environments.

Any multiple wire rope system must have provisions for equalizing the tension in a group of wire ropes. A wire rope tensioning device should be specified, complete with a detailed tensioning procedure, to insure proper sharing of the load among the wire ropes.

5.1.15 Anchor Bolts. Anchor bolts should be designed for the maximum normal load, as well as the locked rotor torque criteria. Anchor bolt groupings should be de-rated for concrete shear cone overlaps. All anchor bolts should be detailed on the contract drawings with type of material, threads, head, depth of embedment and any special grouting or adjustment provisions. Anchor bolts, even those used only for shear conditions, should have hooks, bolt heads, "chairs" or body deformations designed to resist "pull-out" to the limits of the bolt tension rating. Anchor bolts should be installed with a weather-resistant template made from the actual device to be anchored. The specifications should have a detailed procedure for leveling the machinery on the anchor bolts, grouting, and pre-loading the bolts.

5.1.16 Fused Bolts. Several types of lock operating machinery include devices designed to fail at a pre-determined load to prevent overloading of other machinery components. The most successful method for performing this function is usually a "fused" bolt or bolts. Fused bolts can be designed to fail in tension or shear fairly accurately. Bolts fail most predictably in tension. A standard manufactured bolt, of a particular manufacturing run of bolts from the same material stock, can be load tested to improve the accuracy of a design. The designer, by calculating the approximate reduction in nominal diameter of the bolt required to fracture at a specific load, can test bolts machined to the reduced diameter to failure. Similar methods can be applied to shear connections made by bolts. The designer does, however, have to be very careful to insure that the maintenance personnel realize that replacement of the bolts with bolts of the same material and dimensions is critical. It is dangerous to replace these types of bolts with larger, stronger bolts, because the constant failure is inconvenient. Regular failure indicates another problem with the machine or the original design load criteria. Larger bolts could move the failure to a more critical design component. It's important to never use these devices on a gate that can fall causing damage to the structure. Fused bolts have been used successfully on many miter gate machine items, such as operating struts and cone brakes.

5.1.17 Keys, Pins and Splines. Keys, pins and splines are important connections in lock operating machinery designed to transmit power and motion to the gate. With rare exceptions, these items should be designed for the general design criteria, not for failure at or near design operating loads. Any item that, by its failure, can cause a gate or machine to "free-wheel" to impact with the concrete or steel structures, should not be allowed to be the weak link in the system.

5.1.18 Redundancy. Whenever possible and practicable, spillway gate operating equipment design should include redundant system or systems that will prevent failure of a gate to operate due a single component failure. For example, when a hoist motor fails on a multiple gated structure, a universal joint drive shaft assembly can be installed to cross connect between hoists to use an adjacent gate's drive machinery.

5.2 Hydraulic Fluid Power.

5.2.1 General Description and Application. Hydraulic fluid power systems generate, transmit, control and apply hydraulic fluid to devices which perform work. Power is generated by a pump mounted on a fluid reservoir. Pipe, tubing, hose and manifolds transmit the fluid to the output devices. Valves control the direction, pressure, and volume of the fluid flow. Actuators, such as hydraulic cylinders and hydraulic motors, are the typical output devices. Hydraulic fluid power output devices are often used to operate lock gates and spillway gates. UFGS 15010A, provides detailed assistance in the preparation of contract specifications of hydraulic fluid power systems.

5.2.2 Hydraulic Systems - General. Lock hydraulic systems are usually of a centralized power unit design, a local power unit design, a dedicated power unit design, or an integral power unit design. There are a number of variations of these systems, including adaptations for spillway gates. A typical centralized system has a single power unit location with piping and valves transmitting the fluid power to many different locations. A typical local power unit design places an individual power unit near the actuators to be operated at one corner of the lock. A typical dedicated power unit design has a single power unit adjacent to each actuator. An integral power unit design has a dedicated power unit attached directly to each actuator to form a single self-contained unit.

5.2.2.1 Centralized Power Unit. A typical centralized system has the power units located in a lock control building, usually on the second floor so it is above the flood of record. The building is usually located on the middle wall of a dual chamber lock, but can be on either wall of a single chamber lock. An extensive piping system connects the power unit to the miter gate and valve actuators. The piping system is installed in covered trenches or galleries on each wall and in crossovers to adjacent walls. A typical arrangement for dual chambers consists of a reservoir and three electric motor driven variable volume pumps. Two pumps are selected for service and one for backup on a monthly basis. The two variable volume service pumps operate in tandem and can supply multiple actuators on both chambers at same time. Proportional valves are normally used to provide variable speed control of the miter gates. A typical arrangement for a single chamber has two separate power units, with each dedicated to the actuators on one lock wall. The two power units are located adjacent to each other for cross-connection. Cross-connection of the main pressure, pilot pressure and return piping system allows the use of either system as back-up for the other during malfunctions. Under normal operating conditions each power unit will operate one miter gate or one culvert valve. If one pumping system is damaged, the remaining system can operate two miter gate leaves or two culvert valves at a reduced speed by pumping through the cross-connection system to the appropriate control system. The principal advantage of centralized systems are reduced first cost of power units, centralized maintenance, and smaller space requirements on the lock walls. The principal disadvantages are increased cost for piping, increased piping friction, cost for lock piping crossovers, increased vulnerability to leakage, reduced speed/load capacity during back-up operation or extremely cold weather conditions, and increased noise level when located in a control building.

5.2.2.2 Local Power Unit. A typical local system has a power unit located at each corner of

the lock walls. Each power unit is used to operate the adjacent miter gate leaf and culvert valve. It is often deemed prudent to furnish each power unit with an extra main pressure pump, mounted on the same reservoir, to provide back-up power. The principal advantages of the local system are reduced first cost of piping, reduced piping friction, no cost for piping crossovers, reduced leakage, and lower noise levels in personnel areas. The principal disadvantages are increased first cost, decentralized maintenance, any special provisions for flood protection, and larger total space requirements.

5.2.2.3 Dedicated Power Unit. A typical dedicated system has a power unit located at each miter gate and each culvert valve. Each power unit is normally used to operate the adjacent miter gate leaf or culvert valve, but is cross-connected with the adjacent power unit to provide emergency back-up. The principal advantages of the dedicated system are reduced first cost of piping, reduced piping friction, no cost for piping crossovers, reduced leakage, full speed/load capability during back-up operation, and lower noise levels in personnel areas. The principal disadvantages are increased first cost, decentralized maintenance, any special provisions for flood protection, and larger total space requirements.

5.2.2.4 Integral Power Unit. An integral system combines a hydraulic power unit with a hydraulic cylinder to form a self-contained actuator that is completely sealed and submersible. Instead of directional valving, integral power units utilize a bi-rotational gear pump mounted inside a sealed reservoir and driven by a submersible electric motor attached to the reservoir. The speed and direction of the cylinder rod is controlled by a variable frequency drive, located in the motor control center, which controls the speed and direction of the electric motor. The principal advantages of an integral system are no first cost of piping, negligible piping friction, no cost for piping crossovers, minimal leakage, quiet operation, low maintenance, submersible design, and reduced total space requirements. The principal disadvantage is storing at least one back-up spare actuator of each size used on the lock.

5.2.2.5 Spillway Gate Power Unit. Spillway gate power unit design should be a function of the maximum normal operating requirements of the dam. A centralized system may be adequate where only one or two gates need to be moved in a single operation, and the length of piping is manageable. A local system, with each power unit serving several gates, can be used for situations such as hydraulic operated wicket gates. Dedicated systems would be the most practical solution for large dams with many simultaneous operations or remote control capabilities.

5.2.3 Hydraulic Components - General. Hydraulic system components are generally specified by parameters of flow rate, pressure rating and optional features. Pressure and flow volume are intimately related with temperature and viscosity of the hydraulic fluid. The system design operating pressure can be best determined by requirements for reliability, efficiency, safety, maintainability and life cycle cost analysis. The system flow rating is generally based upon the required gate operating times. Gate operating times should be computed on the basis of established experience and safety considerations.

5.2.3.1 System Operating Pressure. Design system operating pressures are usually

determined by balancing the requirements of the hydraulic pump, the hydraulic actuator design, the piping friction, the control valve ratings and the potential for shock loading. Typical operating pressures for centralized power units are 14 MPa (2,000 psi) or less. Typical operating pressures for local, dedicated, or integral power units are 21 Mpa (3,000 psi) or less. Many modern piston pumps are easily capable of trouble free operation up to 34.5 Mpa (5,000 psi) for the volumes needed for lock and spillway service. Increased system pressure, however, increases the risk of leakage and the size of some transmission components. Increased size translates to increased life cycle costs. Bending and/or buckling loads will often govern when sizing the cylinders (bore and rod diameter), which sometimes reduces the required operating pressure.

5.2.3.2 System Component Ratings. The manufacturer's published pressure, volume, friction, and fluid compatibility ratings should be used for selection of all system components. Components should be specified to have a normal minimum pressure rating equal to at least twice the maximum normal operating design pressure. Components should be specified to deliver the maximum design volume flow rate at a cumulative pressure loss of less than 1 Mpa (150 psi), including main system valves, piping, hose, filters, and manifolds.

5.2.4 Hydraulic Cylinders – General. Hydraulic cylinders convert fluid power into linear motion. There are three basic types of hydraulic cylinders that are used in typical lock and dam machinery applications: the tie rod type, the telescoping type, and the mill type.

5.2.4.1 Cylinder Features. All hydraulic cylinders should be provided with SAE four-bolt flange connections for the supply ports at the top or side of each end. All cylinders should be furnished with air bleeds and oil drains, at the high and low points, respectively, at each end. All cylinders should be provided with "zero-leakage" sealing systems to prevent drift and environmental contamination. All piston rods should be chromium plated over the appropriate steel or stainless steel material. All cylinder mounting features, including trunnions, should be attached by the manufacturer at the factory. The cylinder stroke should be designed with sufficient overtravel to facilitate installation tolerances for proper adjustment. The cylinder rod should be designed with a minimum factor of safety of 3.0 to resist a buckling load under compression.

5.2.4.2 Optional Cylinder Features. The cylinder may be furnished with local control manifolds mounted directly to the cylinder. Cylinders can be furnished with adjustable cushions to assist in deceleration when approaching the stroke limits. Cylinders can be furnished with stop tube or double pistons to assist in resisting side loading of the piston rod.

5.2.4.3 Tie Rod Cylinders. Tie rod cylinders are commonly used in sizes below ten (10) inch bore. These cylinders are more prone to problems caused by field maintenance than other types of cylinders. They are typically designed for lower overall pressure requirements than the mill type cylinder.

5.2.4.4 Telescoping Cylinders. These cylinders are commonly used in situations, similar to an elevator, where installation space is limited, loading is relatively minor, but the cylinder stroke required is very long. Since each stage of the cylinder must be enclosed within another

stage, the available force is limited.

5.2.4.5 Mill Type Cylinders. Mill type cylinders are generally rated for the higher pressures than the other designs. The cylinder heads are generally mounted with bolts or capscrews. Most main operating systems should be designed for this type of cylinder.

5.2.4.6 Packaging for Storage and Handling. All cylinders shall be packaged for the maximum storage time and conditions anticipated under the contract duration, including shipping conditions. Cylinders should be shipped with the piston rod(s) retracted and restrained from movement. Cylinder packaging should include provisions for rotating horizontally stored cylinders every 30 calendar days. Cylinders, filled with hydraulic fluid for storage, should be equipped with accumulators, or similar expansion devices, to accommodate oil expansion due to temperature changes.

5.2.5 Hydraulic Motors - General. Hydraulic motors convert fluid power into rotary motion. Pressurized fluid from the hydraulic pump turns the motor output shaft by pushing on the gears, pistons or vanes of the hydraulic motor. Hydraulic motors can be used for direct drive, where sufficient torque capacity is available, or through gear reductions. Most hydraulic motors must operate under reversible rotation and braking conditions. Motors are often required to operate at relatively low speed and high pressure. Motors can experience wide variations in temperature and speed in normal operation.

5.2.5.1 Gear Motors. Gear motors are compact, basic in design, provide continuous service at rated power levels with moderate efficiency, and are highly reliable with high dirt tolerance. There are several variations of the gear motor, including the gerotor, differential gear motor, and roller-gerotor, which produce higher torque with less friction loss.

5.2.5.2 Piston Motors. The most common type of motor available is the axial piston. Axial piston motors have high volumetric efficiency, which permits steady speed under variable torque or fluid viscosity conditions. This permits the smoothest, most adaptable approach to variable loading conditions. Axial piston motors are available in two types of design, swash plate and bent axis. The swash plate design is the most commonly available hydraulic motor. The bent axis design is the most reliable, and the most expensive. Radial piston motors are extremely reliable, highly efficient and rated for relatively high torque. Radial piston motors are less commonly available, which may require extensive investigation into availability to insure adequate procurement competition is possible. All piston motors are available in fixed and variable volume versions.

5.2.5.3 Vane Motors. Vane motors are compact, simple in design, reliable, and have good overall efficiency at rated conditions. Vane motors use springs or fluid pressure to extend the vanes. Vane motors, generally, use a two or four port configuration. Four port motors generate twice the torque at approximately half of the speed of two port motors.

5.2.6 Hydraulic Pumps - General. Hydraulic pumps convert electrical energy into fluid power. The fluid power is in the form of hydraulic fluid delivered to operating devices at a pressure and volume required to perform the work of the system. Gears, vanes or pistons are

used to compress the hydraulic fluid to the conditions required by the system. Hydraulic pumps, generally, operate at higher speeds and pressures than hydraulic motors without significant thermal shock, speed and load variations. While some systems use reversible pumps, most lock operating systems currently use a uni-directional pump with a directional control valve to reverse the operation of the actuators.

5.2.6.1 Gear Pumps. The gear pump is a simple, rugged, positive displacement design with a large capacity for a small size. Gear pumps have a high tolerance for fluid contamination, good overall efficiency, and are relatively quiet. While these pumps are fixed volume at a given rpm, their flowrate/rpm characteristics are linear within their efficiency range. Speed and direction control of an actuator can therefore be provided by driving a reversible gear pump with a variable speed electric motor, which makes them ideal for integral type power units. Gear pumps are commonly used for pilot pressure applications. Gear pumps are generally restricted to less than 24 MPa (3,500 psi) service.

5.2.6.2 Piston Pumps. The piston pump is the type most often recommended as the main pressure pump for hydraulic power systems. It has the highest volumetric efficiency, highest overall efficiency, highest output pressures, and longest life expectancy. This type of pump is available in variable displacement models with a large variety of control systems for pressure and capacity. It is recommended that the drive motor speed be designed for 900 to 1,200 rpm, if possible, in order to reduce noise and increase pump life. Piston pumps are generally restricted to less than 42 MPa (6,000 psi) service.

5.2.6.2.1 Axial Piston Pumps. Axial piston pumps are used for high pressure and high volume applications. The two basic types of axial piston pump are the swash plate and the bent axis designs. The bent axis design is considered to be a higher quality pump with less noise, vibration and wear than the swash plate design. Swash plate pumps can be designed to drive a separate pilot pressure pump from a shaft extension, while bent axis pumps will require a separate electric motor/pump arrangement for pilot pressure.

5.2.6.2.2 Radial Piston Pumps. Radial rolling piston pumps are an extremely reliable, simple design. A typical design includes solenoid controls for up to 5 discreet operating speeds. Each of the operating speeds has a variable adjustment range from zero to full volume capacity to permit field adaptation to operating conditions. The typical pumping system includes an integral pilot pump, internal pressure relief valves, and associated control devices for speed of shifting between pumping rates.

5.2.6.3 Vane Pumps. Variable volume vane pumps are efficient and durable, as long as a very clean hydraulic system is maintained. In a very simple circuit the pressure compensation feature of the vane pump reduces the need for relief valves, unloading valves or bypass valves. Vane pumps are generally restricted to less than 14 MPa (2,000 psi) service.

5.2.7 Control Valves - General. Various types of valves are used to control pressure, volume and direction of fluid flow in a hydraulic circuit. Typical operating elements of these valves are poppets, sliding spools, springs, stems, and metering rods. Valves can be controlled manually (i.e.: hand wheel, lever, joystick, etc.), mechanically (cam, roller, toggle, etc.),

hydraulically (pilot pressure), or electrically (Linear Variable Differential Transformer, solenoid, etc.). Control valves are used in two basic types of hydraulic circuits, closed loop and open loop.

5.2.7.1 Closed Loop Circuits. Closed loop circuits use a feedback system, which generates input and output electrical signals to track system performance. The electronics compare the input and output signals on a continuous basis in order to automatically adjust the system to the level of performance required. Typical closed loop system valves are servo-valves and proportional valves.

5.2.7.2 Open Loop Circuits. Open loop circuits rely upon the performance characteristics of the individual valve components to meet the system requirements. Basic pressure control valves, flow control valves, and directional control valves are used to alter the pressure, flow, and direction of the fluid power using only simple electrical solenoids for control in an open loop circuit.

5.2.7.3 Proportional Valves. These valves can assume any position between their minimum and maximum settings in proportion to the magnitude of an electrical input signal. They can control direction, flow rate and pressure. Since they are infinitely positionable, the directional valve spools can be designed to throttle the flow rate in each direction of motion. Actuator force or torque can be controlled by varying the pressure. Pressure is often a function of actuator speed in lock and dam operating equipment. Where pressure cannot be related to actuator speed, pressure control valves must be used in the circuit. Proportional valves are mass produced with interchangeable spools and valve bodies. This can lead to slight misalignment, which results in center position “overlap”, or no flow to the outlet ports. This flow “deadband”, while not a problem in flow control type circuits, can cause errors, and instability, in closed loop feedback positioning circuits.

5.2.7.4 Servo-Valves. Servo-valves are made to closer tolerances than proportional valves. These valves have superior response, repeatability, and threshold response. They are, however, considerably more expensive than proportional valves. Repeatability is a measure of the number of times a valve can produce the same flow rate with repeated signals of the same magnitude. Threshold response is the smallest variance in input signal that produces a corresponding change in the flow rate. Meticulous construction is required to produce precise alignment of the spool lands with the valve body ports. The higher cost of servo-valves is usually justified when more sophisticated performance such as high load stiffness, good stability, precise positioning, good velocity and acceleration control, good damping, and predictable dynamic response, is required.

5.2.7.5 Pressure Control Valves. Pressure control valves are used in hydraulic systems to control power and to determine pressure levels at which various operations or actions can occur. Pressure control valves can limit the maximum pressure in a circuit, reduce pressure levels from one part of the circuit to another, provide alternate flow paths for fluid at selected pressure levels, provide resistance to fluid flow at selected pressure levels, and modulate transient pressure shock in a hydraulic circuit. Pressure control valves include pressure relief valves, sequence valves, counterbalance valves, holding valves, unloading valves, reducing valves and shock suppressors. All of these valves have some method of pressure setting adjustment. Valves operating in

enclosed areas should be furnished with key-locked handles to discourage casual adjustment. Valves exposed to weather, such as in grated pits, may be furnished with lock nuts to maintain final settings.

5.2.7.5.1 Pressure Relief Valves. A pressure relief valve limits upstream pressure to a preset value by returning part, or all, when sized correctly, of the fluid flow to the reservoir until the upstream pressure drops below the relief setting. The two principle types of pressure relief valves are the spool type and the poppet type. The poppet type has the shorter response time, but the spool type has more stability and accuracy of operation and adjustment. Most main pressure relief and pilot relief valves should be the balanced piston type (spool type) with an appropriate adjustable pressure range. Pressure relief valves should be furnished for the main pressure pump, pilot pressure pump, and each actuator line between the directional valve and actuator inlet ports.

5.2.7.5.2 Sequence Valves. Sequence valves direct flow to a circuit in a predetermined logical sequence by sensing that adequate pressure has been developed in one circuit before allowing flow in another circuit. Sequence valves may have to actuate two or more spools or poppets to connect primary and secondary passages. Sequence valves are generally used in circuits where one actuator must complete its operation before another actuator, at a higher pressure, can begin its operation.

5.2.7.5.3 Counterbalance Valves. A counterbalance valve is a normally closed pressure control similar to a relief valve, but it has a reverse free-flow check valve. Counterbalance valves are used to control an overrunning or overhauling load. They are commonly used on culvert valve control circuits to prevent the open valve from drifting downward when main pump pressure has been blocked by the directional control valve. Counterbalance valves can be used with an internal pilot or a remote pilot actuation. Using a remote pilot can significantly reduce the power required to lower the load at a controlled rate.

5.2.7.5.4 Holding Valves. A holding valve is basically a special type of counterbalance valve, and are functionally similar to a pilot-operated check valve. Pilot-operated check valves trap fluid to prevent actuator movement, but during actuator travel produces little resistance. Counterbalance valves, in addition to preventing movement, add resistance during travel, which increases the power required to operate. Holding valves avoid the objectionable features of both the counterbalance and pilot-operated check. Holding valves also provide built-in thermal-relief protection.

5.2.7.5.5 Unloading Valves. The straight unloader and the differential unloader are two basic types of unloading valves. The straight unloading valve is a two-stage relief valve with its pilot port connected externally to a separate signal source. The differential unloading valve operates on an area differential between the control poppet seat and a pilot piston of 10 to 20 percent. Unloading pressure is controlled by the spring force on the control poppet. The pilot piston is actuated by external pilot pressure such that it unseats the poppet at a preselected pressure. When the poppet opens, the main valve spool shifts to the open position. The pilot piston then prevents the poppet from reseating until the pressure drops below the required

differential.

5.2.7.5.6 Reducing Valves. A reducing valve is a normally open valve, which modulates, or blocks, flow at a preset pressure. They control downstream pressure by restricting flow due to the positioning of the spool with respect to the outlet port.

5.2.7.5.7 Shock Suppressors. Sometimes called safety valves, shock suppressors are two-way-valves that "snap" open to relieve hydraulic shock. Hydraulic shock is simply an excessive pressure instantaneously applied to the circuit. When high pressure, high flow rate events occur, the two-way-valve "snaps" open to allow the fluid to pass from the inlet to tank. The small amount of fluid bypassed decreases the rate of pressure rise, thus preventing the shock.

5.2.7.6 Flow Control Valves. Flow control valves are used to control the rate of fluid flow from one part of the hydraulic system to another part. These valves can be used to:

- Limit the maximum speed of the actuating devices,
- Limit the maximum power available to sub-circuits,
- Proportionally divide or regulate the flow to different branches of a circuit, and
- Control the speed of pilot controlled valves.

Flow control valves operate in three general configurations, meter-in, meter-out, and bleed-off. Meter-in and meter-out methods use a throttling approach to restrict the size of the fluid path, while bleed-off bypasses the flow to tank or a lower pressure area of the circuit. Flow control valves can be compensated or non-compensated. Compensated valves automatically adjust to provide uniform pressure drop across the valve to furnish constant flow rates.

5.2.7.6.1 Meter-In Circuits. Meter-in flow controls should be used when the load may "kick back", the circuit power or pressure level must be retained when the actuator pressure level falls off, and for dividing flows to multiple branch circuits.

5.2.7.6.2 Meter-Out Circuits. Meter-out flow controls should be used when the load is overhauling or overrunning, the load can decrease causing lunging, and when a back pressure is desired for rigidity in motion.

5.2.7.6.3 Bleed-Off Circuits. Bleed-off flow controls should be used when a soft circuit is desired, and when the power to be controlled is a fraction of the circuit power to the actuator.

5.2.7.7 Directional Control Valves. Directional control valves, by providing a choice of flow paths, do one or more of the following:

- Control direction of actuator motion,
- Select alternate circuits, and
- Perform circuit logic functions.

The check valve is the simplest of all directional controls. Other directional controls are described by the number of primary ports available for control. They are usually referred to as two-way, three-way or four-way valves.

5.2.7.7.1 Check Valves. Check valves can be used for a wide variety of functions in a circuit. They can be used to prevent flow in one direction, while permitting free flow or pilot-controlled flow in the other direction. They can be externally piloted to provide an actuator locking function. They can be used in pilot lines to provide rapid release of a pilot-operated spool.

5.2.7.7.2 Two-Way Directional Valves. Two-way valves are generally used to perform logic functions such as AND, OR, and AND/OR decisions. These valves allow flow in one position and no flow in the other position. These valves can be in the normally open or the normally closed position until actuated by levers, solenoids, pilot pressure, etc. Two-way valves can be used to perform interlock or safety functions.

5.2.7.7.3 Three-Way Directional Valves. Three-way valves have a pressure supply port, a tank port, and one actuator port. These valves are generally used with an actuator designed with springs or other means of returning to a rest position, since they can address only one actuator inlet port. This type of valve is not generally recommended for normal lock and dam machinery design, since it is important to use pump flow to control operation in both directions of travel.

5.2.7.7.4 Four-Way Directional Valves. The typical system directional valve for lock and dam projects is the four-way, three position, directional valve. This valve has four main ports; main pressure, tank, actuator A, and actuator B. This permits the valve to reverse actuator direction in a controlled manner with the main pump flow. These valves can be furnished with a wide variety of spools for controlling flow. The directional control valve is usually the single greatest pressure loss point in a hydraulic circuit, therefore it is customary to design this valve for 1.5 to 2.0 times the maximum system flow rate in order to minimize system losses.

Spools. The typical spool used for modern lock and dam hydraulic systems is the blocked center, solenoid-controlled, pilot-operated, spring centered type spool. This type of spool is used successfully in hydraulic systems, which can be remotely operated with a series of interlocks to prevent conflicting machinery behavior. A solenoid operated pilot pressure four-way valve applies pilot pressure to shift the pilot-operated spool in the main pressure four-way valve. The pilot pressure to each side of the spool is usually passed through a combination flow control-reverse free flow check valve to permit adjustment of main pressure spool actuation speed. The spring-centered feature is used in the pilot valve and the main pressure valve to return the system to blocked center when the solenoids are <u>not</u> energized to permit machinery operation. The tandem center type spool has been used with some success, when proper pressure control valves are included in the circuit to prevent actuator drift after main pressure pump shut down.

Controls. Solenoid-controlled, pilot operators are usually used on the more modern open loop type systems to allow remote, or centralized, operation with appropriate electrical or electronic interlocks. Direct solenoid operated valves are generally available in smaller flow rate capacities. All solenoids should be equipped with manual operating pins for troubleshooting and emergency operation. Lever, or other manual, type operators should only be used on the most basic systems, or where human observation of the operation from the local controls is essential.

Mounting Systems. Directional control valves should be mounted on steel manifolds with the associated pressure control valves. Manifold systems are economical, reduce leakage, minimize piping fabrication costs, and reduce space requirements. Aluminum manifolds should not be used with steel piping or steel bolted SAE flange connections due to the localized yielding of the aluminum threads under installation, shock and vibration. The specification should ask for detailed drawings of the drilled passages of the steel manifolds. A manifold, properly prepared for long term storage, of each different type, should be included in the spare parts.

5.2.8 Reservoirs. Hydraulic fluid reservoirs should have a minimum capacity of approximately three (3) times the maximum main pressure pump output capacity. Maximum capacity will be determined by other factors such as the number and size of actuators served, long lengths of large diameter delivery piping or excessive thermal expansion. Since the typical hydraulic cylinder has substantially more fluid per length of stroke on the cap end side than on the rod end side (the rod takes up volume as it retracts into the cylinder), more fluid will be returned to tank when a cylinder is retracted. Where multiple hydraulic cylinders are served, an analysis of all potential operating cases (number of cylinders that can be extended or retracted at the same time) should be performed to determine the maximum and minimum reservoir levels required for the complete system. After the initial reservoir size is determined, its heat dissipation capacity should be checked to determine if it is adequately sized to dissipate heat generated by the individual components of the system and any ambient or solar heat gain. The reservoir should have sufficient capacity to provide a flooded pump suction, without vortex formation, under all operating conditions. The reservoir should be fabricated from annealed and pickled steel or stainless steel plate, designed for the loads applied by all accessories and pumping equipment. Coating the interior of the reservoirs not made of stainless steel with an epoxy system is no longer recommended by many hydraulic system manufacturers. The reservoir should be internally reinforced, as required, with vertical baffles to separate the return oil from the pump suction. The baffles shall be designed to prevent turbulence at the pump suction. The pumps and motors should be mounted with vibration isolators and connected with flexible hoses and conduit, to prevent noise and vibration transmission to the reservoir and fluid. The reservoir should be provided with appropriate oil level gauges, low and high level shutoff switches, magnetic particle collector, drain valves, removable clean-out plates for suction and return sides, suction filters (if required for pumping unit design), and reservoir heaters (if required by the hydraulic fluid design). Separate reservoirs and sealed reservoirs are two basic types of reservoirs that should be considered.

5.2.8.1 Oil level gauges. Oil level gauges should be one, or more, sight gauges placed to show the full normal operating range of fluid levels within the middle 80 percent of the gauge range. The lowest sight gauge installed shall have a thermometer, designed for the maximum normal hydraulic fluid operating range.

5.2.8.2 Shutoff Switches. Float-type shutoff switches have proven to be reliable. Switches can be provided to prevent low suction level, and overfill, as well as issue alarms when approaching fault conditions.

5.2.8.3 Magnetic Particle Collectors. These devices are permanent magnets immersed in the hydraulic fluid which collect metal particles that can cause pump damage. Periodic inspection, and cleaning, of these devices can be essential in the early identification of pump wear problems.

5.2.8.4 Drain Valves and Cleanouts. Reservoir drain valves should be designed to permit easy access for draining the hydraulic fluid to the bottom of the reservoir. This includes placing the location well above the surrounding floor level sufficient to place a disposal container of modest size for collection of the fluid. Cleanouts should be properly sealed, bolted or clamped, and placed for easy access when in service.

5.2.8.5 Reservoir Heaters. Reservoir heat is not required for most installations. There are a large number of viscosity stable hydraulic fluids, designed for aircraft and missile service, which are usable with piston pumps at temperatures down to –40°C (–40°F). Where it is determined to be necessary, the reservoir heating elements should not exceed a watt density of 1.5 watts per square cm (10 watts per square in) of element in order to eliminate “charring” of the fluid.

5.2.8.6 Breathers. Hydraulic systems usually use a replaceable filter-breather device which permits atmospheric air to be drawn into the reservoir. These devices can be furnished with a desiccant type filter for moisture control. Recent experience indicates the best method of breather protection for hydraulic systems in the damp, lock and dam environment is the use of a bladder-type breather system. Where sufficient space is available, the flexible bladder-type breather system seals the hydraulic system against dirt, water, and other contaminants.

5.2.8.7 Control Valve Manifolds. It is beneficial to mount any control valves associated with the pumping system on a control manifold mounted on the reservoir for convenience of adjustment and maintenance. In some cases the directional control valves, pressure controls and flow controls can be mounted on the reservoir to conserve space.

5.2.8.8 Separate Type Reservoirs. Separate reservoirs are the most common design in industrial, or lock and dam, applications. A separate reservoir can be designed for a single pump/motor group serving one or more actuators or multiple pump/motor groups serving many actuators. Some dual chamber locks with centralized power units have one reservoir supplying three pump groups (two of the three are normally used), which operate all of the actuators for both chambers. The three principle versions of separate reservoirs are rectangular, “L”-shaped,

and vertical.

5.2.8.8.1 Rectangular Reservoirs. These types of reservoirs use a rectangular steel box to hold the fluid and house the accessories. They can be designed with the pump groups mounted on top, underneath, or inside the reservoir. With top mounting a short suction line is required for each pump which extends below the minimum suction submergence of the fluid. With

underneath mounting the pump groups are provided with a flooded suction which improves pump operating conditions significantly. With inside mounting the pumps are submerged in the fluid and the drive motors are mounted vertically on top of the reservoir.

5.2.8.8.2 "L"- Shaped Reservoirs. "L" – shaped reservoir packages have the pump groups mounted next to the reservoir on a common base. This arrangement provides good access to components for maintenance and repair.

5.2.8.8.3 Vertical Reservoirs. Vertical reservoirs have the pump group in a vertical plane with the pump below a removable reservoir cover. While this arrangement is very compact with a low suction lift requirement, the size is limited by the requirement for lifting the entire pump group, controls and reservoir cover to service any equipment.

5.2.8.9 Sealed Reservoirs. Sealed reservoirs are primarily used for the integral power unit of a self-contained actuator, which consists of a power unit attached directly to the hydraulic cylinder it operates. These actuators can be configured in many different ways by changing the shape of the reservoir and where/how it is attached to the cylinder. The direct connected miter gate actuators recently installed on several locks have long slender reservoirs, made from square structural tubing, bolted to brackets on the side of the cylinder. Tainter valve actuators have also been designed with shorter reservoirs made from round structural tubing and permanently welded to the rear of the cylinder tube during fabrication. This arrangement allows the actuators to fit existing recesses without modification. Sealed reservoirs have a pump mounted inside and submersible motor mounted outside. Since these reservoirs do not have breathers or accumulators, the air pressure inside will vary with cylinder rod position and oil temperature. The actuator should be designed so the normal pressure range in the reservoir is between 21 kPa and 69 kPa (3 and10 psig). Care should be taken to make sure the pressure never goes below atmospheric or above 207 kPa (30 psig).

5.2.8.10 Secondary Containment. Some method of secondary containment for the contents of the fluid reservoir should be provided to eliminate spills and waterway contamination. The reservoir can be specified as "double-walled" with leak detection electronics between the walls. The reservoir can be contained within a containment pit similar to aboveground fuel tanks with leak detection electronics within the pit. This is required for any reservoir with direct drainage features to the waterway, such as floor drains, sump pumps or lock wall recesses. Oil/water separators may be used to treat drainage prior to discharge into the waterway, but these devices should be thoroughly tested prior to installation to insure that the effluent meets all state and local environmental pollution criteria.

5.2.9 Manifolds. Pre-drilled steel manifold blocks have proven to be extremely reliable for

connection of control valve assemblies in hydraulic systems. Manifolds provide short, direct flow paths between controls, which reduces friction and response time. Subplate mounted type control valves can be directly mounted, or stack mounted, to the manifold, which eliminates excess piping and fittings. This mounting arrangement reduces leakage. Maintenance costs are reduced by eliminating piping connections. Manifolds can be sensitive to filtration problems, but proper preventative maintenance should yield excellent results. It is essential to specify that

all manifolds should be furnished with re-manufacturing drawings that document the dimensions and locations of all pre-drilled passages, including where fabricating passages have been plugged.

5.2.10 Filters. Pressure-side and return-side filters should be provide on all hydraulic power units. "Spin-on" pressure line filters, rated for full maximum discharge pressure of the pump, should be furnished for the main supply and pilot supply pumps. A large, multiple cartridge, return line filter should be mounted adjacent to the reservoir. Return line filters should be the full-flow type, designed to pass all flow through the filtering elements. Return line filters should, however, include a bypass relief valve system designed to shunt flow around the filter after a pre-set pressure drop is exceeded. Return line filters should be provided with a maintenance indicator which clearly shows when the cartridges need to be replaced. All filters should be rated for a minimum10 micron particulate filtration with a B_{10} filtration ratio of 4.0 in accord with ANSI B93.30M. The system must be designed such that all hydraulic fluid passes through one or more of these filters during installation, testing and normal operation. A 200-mesh suction strainer should be used on hydraulic pump inlets only when required by the pump manufacturer.

5.2.11 Accumulators. Accumulators store hydraulic energy in a manner similar to electric storage batteries. They store potential energy by accumulating pressurized hydraulic fluid in a vessel for later release into the system. Accumulators can improve energy efficiency, absorb shocks, damp pulsation, reduce noise, prevent pump cavitation, compensate for leakage or thermal expansion, and provide emergency operation capability. Accumulators are nominally designated by their energy storage mode, either pneumatic, spring loaded, or weight loaded.

5.2.11.1 Pneumatic Accumulators. Pneumatic accumulators use compressed inert gas, such as nitrogen, to force hydraulic fluid back into the hydraulic system. Compressed air is not used due to the danger of explosive air-oil vapor. Accumulators should be the separated type, which use bladders, diaphragms, or pistons, to separate the hydraulic fluid from the compressed gas. Bladder designs are the most versatile.

5.2.11.2 Spring Loaded Accumulators. These accumulators use a spring compressed by a piston to force fluid into a hydraulic circuit. They are typically used in applications below 3.5 MPa (500 psi).

5.2.11.3 Weight Loaded Accumulators. These accumulators use a heavy weight to push the piston downward, forcing fluid into the circuit. They are typically very large with installation and maintenance problems, and, therefore, not recommended.

5.2.12 Piping. All piping, including tubing and flexible hose assemblies, should be designed for a factor of safety of eight (8), based upon the maximum normal operating pressure. This should provide adequate design tolerance for shock and vibration. Proper design of hose assemblies should include adequate length, swivels, end connections and outer coverings to account for exposure to the environment, equipment movement and adjacent hazards. Black steel pipe should be furnished in the pickled and oiled condition. Stainless steel pipe has,

however, been found to be economically justifiable on a life cycle cost basis with reduced maintenance and leakage due to corrosion. Hydraulic tubing can be used for diameters below approximately 40 mm (1-1/2 in). Hydraulic tube fittings should be swaged-type or flare type. Bite-type tube fittings should not be used. All pipe hangers should be furnished with phenolic shock-absorbing inserts to accommodate hydraulic system shock and vibration.

5.2.12.1 Required Design Features. All piping systems shall have air bleed valves at the high points in the system. All piping systems shall have drain valves at low points in the system. An analysis should be performed to locate shutoff valves in the piping system at sufficient intervals to permit localized drainage of piping for pipeline repairs. Gauge, and pressure transducer, connections should be furnished at appropriate locations for future system troubleshooting. Piping shall be tested to the maximum normal working pressure rating of the pipe, tubing or hose in the system.

5.2.12.2 Fluid Velocity Requirements. Main pressure lines should be designed for a velocity of 3 to 4.5 meter per second (10 to 15 feet per second). Hydraulic return lines should be designed for a velocity no greater than 3 meter per second (10 feet per second). Pump suction lines should be designed for a velocity of 0.6 to 1.5 meter per second (2 to 5 feet per second). Pilot and drain lines should be designed for a velocity of 3 to 4.5 meter per second (10 to 15 feet per second).

5.2.12.3 Piping Layout. The piping system should be arranged to permit convenient removal of all valves, pumps, filters, actuators and associated appurtenances. Shutoff valves should be place around equipment which may need to be removed from the circuit for service. Piping should be sloped slightly to encourage complete drainage during servicing. Expansion and contraction should be considered in any design with long pipelines, with the inclusion of accumulators and hoses as required.

5.2.12.4 Hydraulic Tubing. Tubing is specified by outside diameter and wall thickness. Commercially available tubing is clean and easy to bend. Tubing provides easier installation and less fittings are required. Stainless steel and carbon steel tubing is available in welded and seamless versions. Some difficulty has been encountered with the application of tube fittings to tubing above 40 mm (1-1/2 in) outside diameter.

5.2.12.5 Hydraulic Hose. Hydraulic hose should be used to connect hydraulic components where relative motion, or thermal expansion, must be accommodated. Hose is specified by inside diameter and type of construction. Hose has three basic parts: the tube is the inner liner that carries the fluid, the reinforcement is the part that covers the inner liner with woven, braided,

wrapped or spirally-wound materials for strength, and the cover is the exterior material that protects against abrasion, chemicals, weather and ultraviolet rays. Hydraulic hose should be specified as indicated in SAE J517. Plastic hose is lighter, smaller, and lower in electrical conductivity than synthetic rubber hose. Plastic hose is inert to most chemical, hydraulic fluids and ozone. Rubber hose is more resilient and flexible.

5.2.12.6 Piping Fittings. Most piping system leaks occur at fittings or the connection of fittings with valves, pumps, manifolds or actuators. Leaks are generally caused by shock, vibration, thermal expansion/contraction or human impact at joints. Piping fittings should match the type of pipe system in use, such as butt-welded, socket welded, swaged or flare tube, and swaged or crimped hose. Swivel fittings should be used with hydraulic hose to avoid crimping and adverse bending. "Quick" disconnect couplers, which incorporate check valves to shut off flow, can be used for infrequent or emergency connection of equipment to the hydraulic system.

5.2.13 Hydraulic Fluid. Hydraulic fluid is generally selected for compatibility with the main hydraulic pumping unit. The operating range of the pump is the primary consideration for system performance. Most normal operating systems, which experience widely variable temperature and climate conditions, require the use of a petroleum based fluid with a high viscosity index (VI). The permissible viscosity range does vary with different manufacturers and types of pumps.

5.2.14 Gauges. All systems should have properly sized pressure and temperature gauges at locations near important system operating equipment such as the pumps, pressure control valves, actuators and directional control valves. Pressure gauges should be rated for the maximum operating pressure of the system. Gauges with smaller scale ranges have, in general, higher accuracy. Manual pressure gauges should have minimum intermediate graduations of 0.35 MPa (50 psi). Pressure gauges are essential for proper troubleshooting of system performance. All pressure gauges should be provided with pressure snubbers, to protect against shock. Shutoff valves should be used to isolate the gauges until readings are required. Glycerine filled pressure gauges are not required, unless severe vibration is expected at the gauge location.

5.2.15 Special Design Considerations.

5.2.15.1 Limiting System Pressure. In general, pressure relief valves should be provided to insure that pressures cannot exceed 125 percent of pressure during normal operation. In practice, this is accomplished by adjusting by adjusting the relief valve operating pressure to be barely high enough so the gate can be raised or the valve opened.

5.2.15.2 Cylinder Tubes and Rods. Guide specifications indicate cylinder tubes should be ASTM A 519 Grade 1018 heavy wall seamless tubing. However, cylinder tubes fabricated from one piece AISI 4340 steel with one piece ASTM A36 steel trunnions have given satisfactory service for hinged crest gates. Leakage of hydraulic fluid from cylinders. The most common problem occurring with hydraulic cylinders has the leakage of hydraulic fluid. This is generally caused by corrosion and scoring of piston rods. For this reason the material and finish on the piston rods must be matched to the conditions in which the cylinder will be used. Various piston rod coatings have been developed for resistance to corrosion and abrasions. Guide specifications

indicate piston rods should be ASTM A 564 or ASTM A 705, Type 630 or XM-12, heat treated to a condition of H-1150 and hard-chrome plated. The manufacturer should be completely responsible for the selection of surface preparation of the rod, the chrome plating, the quality of the chrome plating, and the bonding to the base metal and the finish.

5.2.15.3 Pistons. Pistons should be precision fitted to the cylinder body bore. They should be fine-grained cast iron and should be designed and equipped with seals and bearing rings as needed, and fabricated from materials as recommended by the Contractor to provide zero leakage. The design should protect the piston rings from blow-out and oversqueezing.

5.2.15.4 Seals. Dynamic seals should be suitable for both frequent and infrequent operation and should be capable of not less than 500,000 cycles of operation in properly maintained systems. Cylinder tubes should also have the bore honed to a surface finish compatible with the seals being used to result in zero leakage past the seals. All seals should be of material suitable for use with the hydraulic fluid specified.

5.2.15.5 Guarantees. Although an exception to DOD policy, designers of some installations have specified guarantee periods greater than one year. In some cases the guarantee period for hydraulic cylinder parts other than the rods have been specified as two years from date of acceptance, and the hydraulic cylinder piston rod's guarantee period has been specified as five years from date of acceptance. The warranty should be against defective materials, design, chrome plating of the rod, and workmanship.

5.2.15.6 Design/Build. When advantageous, providing the hydraulic system by means of a design/build supply contract should be considered. The design should be based upon the conditions under which they will operate, and hydraulic cylinders are typically used in exterior locations and may be exposed to hot or cold, humid, moist, and/or dusty conditions. Therefore, the conditions in which the cylinders are to be located should be specified in the contract.

5.2.15.7 Spare Cylinders/Parts. Spare hydraulic cylinders are not recommended for gates actuated by direct connected hydraulic cylinders, unless they can be properly stored and maintained in accordance with the cylinder manufacturer's recommendations for long term storage. Synthetic materials for cylinder bearings and seals have greatly reduced the seal problems (compression and drying out) associated with long-term horizontal storage of large cylinders. However, most manufacturers still recommend that stored cylinders should be protected from the elements and fitted with stand pipes to insure they are completely filled with oil. Provisions for periodically exercising stored cylinders are also recommended. Spares should be considered for other hydraulic system components such as control and relief valves, hydraulic

pump and motor, etc.

5.2.15.8 Piping. Piping should be pitched a minimum of 1/2 in. per 50 ft in order to provide high and low points, and accumulator tanks should be used in systems with long lines to minimize the effect of hydraulic surge.

5.3 Lubrication. The designer should review the guidance provided in EM 1110-2-1424 for the proper selection of oils, greases and fluids.

5.4 Fire Protection.

5.4.1 Hydraulic Systems. The need for fire protection for hydraulic systems will vary depending on the location of the various parts of the system and the hydraulic fluid used. Options may need to be considered for fire protection such as: providing a sprinkler, spray or

fog water system for the hydraulic system, locating a portion of the system to a fire resistant room, or using a fire resistant hydraulic fluid. However, as a minimum NFPA and Building Code regulations must be followed.

5.4.2 EM 1110-2-2608 establishes fire protection guidelines for navigation locks.

5.5 Ice and Debris Control.

5.5.1 Gate Heater. REMR Bulletin Vol.12, No. 2, May 1995 reports on radiant heaters installed at lock and dam projects in the Rock Island District and in St Paul District. Design and installation details are provided for roller gate application. The results of the heater installation were reported as successful.

5.5.2 High Volume Bubbler Systems. This information is taken from a presentation given at the 1998 Heartland Technology Transfer Conference. Additional technical information available to designers considering installing high volume bubbler systems are EM1110-8-1(FR), REMR Bulletin Vol.12, No. 2, May 1995, and the Cold Regions Technical Digest, No. 83-1. These documents provide valuable guidance in designing high volume bubbler systems and the theories involved with using air to melt ice. High volume bubbler systems provide lock personnel a means to control debris and ice formation and ice movement. Controlling the formation and movement of brash ice improves the efficiency of lockages. The benefits obtained by this increase in efficiency are:

- Fewer lock personnel are required to assist with the lockage. This allows more time for lock personnel to be available for other duties.

- Less physical work from lock personnel is required to "push" ice with long pick poles. This promotes a safer working environment for the employees and higher morale among the workers.

- The time required to perform a lockage during winter ice conditions can be

reduced.

- Controlling ice against the lock gates reduces gate operating machinery wear and tear. Stresses imposed upon the gate structural members are lower. Machinery and structural components life and time between periods of major maintenance are extended.

- Adhesion of ice to the lock structure and gates can be minimized by the melting action associated with the use of high volume bubblers. Ice of varying thickness can be melted in areas contacted by the released air bubbles.

5.5.2.1 Installation. For existing locks, the installation of high volume bubbler systems should be included as part of lock and dam major maintenance contracts. This allows the installation of the submerged pipe and accessories while the lock is dewatered. This reduces the

overall cost to install submerged high volume bubbler piping. Sufficient time needs to be provided to install the piping for the gate recess flushing screens and main chamber screen at both sets of gates. The landwall compressor and piping can be installed both as part of the major maintenance contracts and in separate contracts that included the same type of work at multiple sites.

5.5.2.2 System Component/selection. The major components of high volume air systems are modeled from the research and design calculations conducted by the Cold Regions Research & Engineering Laboratory. The findings of the research laboratory are from a prototype installation at Starved Rock and Peoria Lock. This research should form the basis of design for high volume air systems to control ice at locks. The components of the high volume system described below are particular to systems installed on the Mississippi River.

5.5.2.2.1 Compressor. The compressors are 150 HP electric motor driven positive displacement rotary screw type. Each compressor is capable of delivering 1275 cubic meter per hour (750 cfm) of free air at 690 kPa (100 psig) full flow and is designed for continuous operation. One compressor serves each bubbler system. The compressor delivers flow to the upstream and downstream gates. Compressor sizing is determined by an iterative air system analysis. The air system analysis determines air discharge rates from orifices in the piping assuming a dead-end pressure. A computer program (Bub-300) developed by the Cold Regions Research & Engineering Laboratory is capable of making this simulation to achieve a one-percent difference between the calculated and specified compressor outputs.

5.5.2.2.2 Supply Pipes. Supply pipes have traditionally been three-inch schedule 40 galvanized steel piping. The piping is routed from a centrally located compressor to each end of the lock chamber. Valve manifolds are installed near the gate recesses to control the delivery of air to each submerged flushing screen. The control valves have typically been three-inch butterfly valves with manual control. Electric control valves were installed at Starved Rock Lock and are well liked by the operators.

5.5.2.2.3 Flushing Screen Pipes. The submerged piping is schedule 40 galvanized steel and varies in size from 76 mm (3 in) to 32 mm (1 1/4 in). The varying size is dependent upon the flushing screen being served and the proximity to the dead-end of pipe. The chamber screen is maintained at 76 mm (3 in.) due to the volume of air being delivered and the distance across the lock chamber. This screen is 29 meter (96 ft) long for a 33.5 meter (110 ft) wide chamber and is designed with 2.4 meter (8 ft) orifice spacing. Gate recess screens are supplied with 76 mm (3 in) piping and reduced accordingly to meet the requirements established by the Cold Regions Research & Engineering Laboratory. The gate recess screens have varying orifice spacing to provide more air near the quoin end of the gate. The orifice spacing follows the recommendations of EM 1110-8-1(FR). Nine orifices are installed along each gate recess-flushing screen.

5.5.2.2.4 Orifices. Drilled pipe plugs provide the desired quantity of air to the water. The pipe plugs are installed in vertical tee fittings along the horizontal pipe runs. 9.5 mm (3/8 in) diameter holes have been determined to deliver the desired quantity of air from the prototype installations. A design flow of 51 cubic meter per hour (30 cfm) per orifice is desired.

5.5.2.2.5 Check Valves. Freeze protection of the airlines near the water's surface requires the installation of spring loaded check valves. The check valves are installed near the bottom of the lock chamber in each vertical leg of the air supply piping. Check valves have had limited success and are subject to periodic maintenance by divers.

5.5.2.3 Lessons Learned.

5.5.2.3.1 The following lessons learned are based on seven high volume bubbler systems installed within Rock Island District over the last 15 years.

- Specify low ambient temperature compressor enclosures to permit operation in ambient air temperatures as low as -29EC (-20EF).

- Specify compressor lubricant to be food grade polyalphaolefin and environmentally friendly.

- Size back-up generators to accommodate both the electrical load from the lock and dam and the electrical load of the compressor.

- Check valves within the vertical piping have not been 100 percent reliable and freezing in the pipes has been experienced. It may be better to install isolation valves, cross fittings and pipe plugs to allow lock personnel to either charge the vertical piping with air or fill them with environmental RV anti-freeze. Charging the piping with air forces the static water level below the freezing surface and is the preferred method.

- Ball valves or positional butterfly valves with 90 degree full open to full close operation are best suited to deliver the air to the bubbler screens. These valves are

preferred over gate valves by lock personnel.

- Ultra violet protection is required for all exposed compressor controls to prevent deterioration.

- When zebra mussel infestation is a problem increased periodic operation should be employed to flush the juvenile mussels from the orifices before they are allowed to reach adulthood. More permanent remediation measures should be incorporated, as they become known. One potential, yet untried, solution would be to incorporate elastomeric pinch valves over the orifices to prevent zebra mussel and sediment intrusion.

5.5.2.3.2 The following lessons learned are based on high volume bubbler systems installed within Pittsburgh District.

- A quoin flusher does a good job of clearing floating debris before a miter gate is opened, while consuming much less air than a gate recess screen. These flushers consist of a single orifice located near the pintle of each miter gate. Each flusher is supplied by a smaller 19 mm (0.75 in.) line and is solenoid operated from the control station. Standard procedure is to operate the quoin flushers briefly each time the gates are opened. The gate recess screens are still needed for ice and heavy debris.

- Bubbler systems were installed on two identical locks with the exact same arrangement except for the orientation of the orifices. The orifices for one system were installed pointing up, while the orifices for the other system were installed pointing down. This was done to see if the response time of these systems could be improved. Each system had quoin flushers and flushing screens for the miter gate recesses, upper bulkhead seal, and upstream approach. As expected, the system with the orifices pointing down had a significantly faster response time (time required for all orifices in a screen to begin bubbling). Orifices installed pointing up allow all of the air remaining in the screen piping after it is shut off to escape. As a result, the pipes are full of water the next time the screen is needed. It takes time for the incoming air to displace the water in the piping thru the orifices. The orifice closest to the supply line starts bubbling first and each successive orifice follows until the last one in the screen begins to bubble. Orifices installed pointing down trap the air remaining in the screen piping after the screen is turned off. The trapped air substantially reduces the amount of water in the pipes the next time the screen is needed. As a result, the orifices in the screen begin bubbling sooner with many starting at about the same time. Once all of the orifices in a screen were bubbling fully, there was no observable difference in the bubbling action between the two systems.

5.6 Safety. Cylinder operated gate hoists present some special concerns. Personnel working on hydraulic systems would normally be mechanics who would be aware of most of the potential

dangers, but three items will be discussed. First, oil or gases compressed at high pressures present serious dangers. Gases store enough energy to hurl objects at high velocities. Hydraulic fluids at high pressures can cut or otherwise inflict serious or lethal injuries. Before working on any portions of hydraulic systems they must be de-pressurized. Second, verify that dogging devices are locked before de-pressurizing hydraulic systems or before personnel enter areas under hydraulic operated gates. Procedures must be established for engaging dogging devices, locking out actuation controls, and posting necessary signs for protection of personnel. Third, all personnel who work on the hydraulic systems should be trained in regards to safety as it applies to that equipment.

5.7 Corrosion Protection.

5.7.1 General. Corrosion protection is a combination of the proper selection of materials and selecting the proper coating system for the application. In some instances it may also include the use of cathodic protection systems. Cathodic protection systems are normally more suitable to the gates than to the gate operating equipment. The designer should become familiar with the guidance provided in the CERL technical report “Material Selection Guide for Mechanical Components Used in Civil Works Projects” for the proper selection of materials and EM 1110-2-3400 and UFGS-099702 for the proper selection of coating systems.

5.7.2 Hydraulic Systems. The design of systems for gates actuated by direct connected hydraulic cylinders must consider the environment. Material selection must be based on the corrosively of the water and atmosphere. Cylinders, which are normally in a damp area, should be bead blasted and painted with epoxy paint system. Rods, which are normally under water, should be of stainless steel and be given cathodic protection. Means must be provided so that the system is always under pressure to prevent water from entering the hydraulic fluid and all piping should be of stainless steel. In addition, heating and/or de-humidification may be required to protect pumps and controls.

Chapter 6
Installation, Operation & Maintenance, and Inspection

6.1 Installation
- 6.1.1 General
- 6.1.2 Designer Involvement
- 6.1.3 Contract Requirements
- 6.1.4 CQC/QA Responsibilities
- 6.1.5 Acceptance Criteria
- 6.1.6 As-Built Drawings
- 6.1.7 Operation and Maintenance (O&M) Manual
- 6.1.8 Submittal Review

6.2 Operation and Maintenance

6.3 Inspection and Testing
- 6.3.1 General
- 6.3.2 System Condition
- 6.3.3 Inspection Guidelines
- 6.3.4 Test Operation of Equipment

6.4 Access for Inspection and Maintenance Activities

CHAPTER 6
Installation, Operation & Maintenance, and Inspection

6.1 Installation.

6.1.1 General. This section discusses some of the factors that affect the quality of construction during the manufacturing and installation of gate operating equipment for new construction, for major rehabilitation, and for major maintenance work. It discusses the gate operating equipment and does not include the gate itself except when the operation of the gate, misalignment of the rollers or maladjustment of the gate seals for example, affects the operation of the gate operating equipment.

6.1.2 Designer Involvement. It is important that the designer be involved with construction activities from shop drawing review, through shop inspection, to final field inspection. ER 1110-2-112 establishes policy that requires field construction participation by design personnel. The designer needs to maintain a good working relationship with the Corps construction office and needs to include engineering's involvement in the Engineering Considerations and Instructions to Field Personnel as provided in ER 1110-2-1150.

6.1.3 Contract Requirements. The contract specifications should require the contractor to perform all testing associated with the manufacturing and installation of equipment. The Contractor Quality Control (CQC) representative should be present and witness the testing. The contract documents should identify the test data that needs to be recorded and the contractor should record all test data required by the contract. The contract documents should hold the contractor responsible for any re-testing required due to the contractor's inability to fulfill the contract requirements.

6.1.3.1 Shop Assembly and Test. Each hoist should be fully assembled in the shop. Alignment of component parts, correctness of fabrication, and tolerances, as shown on the shop drawings, should be checked. Each hoist should be given a no load operational test in the shop. In addition to the proper operation of the hoist assembly, items such as limit switches, motor brake, torque switches, and control panel should be checked for proper settings and operation in accordance with the manufacturer's recommendations.

6.1.3.1 Field Installation and Tests. The contractor should be required to submit a detailed installation procedure. The installation procedure should show items such as storage and handling requirements, installation sequence, alignment techniques and criteria, bolt torque requirements, anchorage requirements, fits and tolerances, lubrication requirements, fluid levels, inspection and testing requirements, operation and maintenance information. The hoist units should be shipped assembled, ready for field installation in accordance with the contractor's installation procedure. All installed equipment should undergo field testing. The field test should include operational tests of the installed equipment with the gate in the dry and if possible at or near design head. The gate should be operated through a number of complete cycles in the dry to check the alignment of gate operating equipment and gate rollers and seals, and operation of the

controls, limit switches, and brake. The gate operating system should also show that it can hold the gate in any position on demand. A dynamometer or load test should then be conducted at or near design head (if possible) with the measurements of the motor current, voltage, temperature, and vibration taken. For hydraulic operating systems, the pressure and leakage tests should be witnessed and the operating pressures should be checked against the design pressures. Relief valve and torque switch settings should be checked.

6.1.4 CQC/QA Responsibilities. In order for the CQC program to be effective it must be enforced. The designer, as a member of the command's QA team, can assist the construction office in program enforcement.

6.1.4.1 The designer should have the opportunity to review the CQC plan to ensure that the plan includes the manufacturing and installation of the gate operating equipment. A Preparatory Inspection should be conducted for this phase of the contract work and the designer should have the opportunity to attend the Preparatory and Initial Inspections. The designer should also have the opportunity to review Follow-up Inspection reports.

6.1.4.2 Also as part of the QA responsibilities, the designer should attend the shop inspection and test. To prepare for this, the designer should review the appropriate technical and non-technical parts of the contract documents. The designer should also review the referenced industry standards and shop drawings and check with the CQC representative to make sure that the contractor is working from the same documents. Both CQC and QA should spot check to confirm that the equipment is being manufactured in accordance with the shop and manufacturing drawings.

6.1.4.3 When multiple hoists are being built, as is common to many of the Corps facilities, the designer should witness the shop and field assembly and testing of at least the first unit. The assembly and testing procedures should be reviewed with the contractor's CQC representative and the calibration of the testing equipment should be checked by the CQC.

6.1.4.4 During installation and prior to operation, the CQC representative should perform the following and the QA representative should spot check for compliance.

- Verify that an approved welding procedure has been submitted and qualified welders are on-site when field welds are required.
- Witness the tensioning of the wire rope for multiple rope hoists.
- Witness dynamometer testing.
- Visually check alignment of shafts, couplings, gears, etc.
- Check operation of electrical components, i.e., motors, controls, limit switches, brakes, etc.

- Verify that all fluid levels and lubrication of components are in accordance with the manufacturer's recommendations.

- Check that the effects of corrosion have been minimized by a properly applied paint or coating system and that there is adequate drainage designed into the hoists to prevent water retention.

- Verify that all reporting requirements have been met.

6.1.5 Acceptance Criteria. The designer should assure that the installation acceptance criteria are provided in the contract documents. When a performance specification is developed for contractor-designed equipment, the specification should also require the contractor to develop the acceptance criteria. The acceptance criteria should be based on Corps standards or applicable industry standards when such standards exist.

6.1.6 As-Built Drawings. The development of as-built drawings is a continuous process and should be a contract requirement. As the contractor is manufacturing and installing the equipment, the as-built drawings should be revised to reflect actual conditions. The CQC and QA representatives should monitor this process. All proposed changes should be coordinated with the designer. The as-built drawings, shop drawings, assembly drawings and installation procedures should be revised as changes occur. The contractor should be required to furnish CADD drawing files on disc or CD compatible with the customer's existing CADD system.

6.1.7 Operation and Maintenance (O&M) Manual. Similar to the as-built drawings, the development of the O&M manual is a continuous process and its development should be a contract responsibility. The O&M manual is developed based on the equipment manufacturer's recommendations. The O&M manual gives basic operating and maintenance procedures, guidelines for troubleshooting and repair procedures, and assembly/disassembly details. It should also include the procedure and frequency of the testing and inspection of components or systems. The O&M manual should be considered a living document. This means that as the project ages and equipment is changed, the O&M manual should be continuously updated to reflect those changes. The O&M manual produced by the contractor will eventually become a part of the project O&M manual developed by the designers.

6.1.8 Submittal Review. The designer should review the shop drawings, assembly drawings, installation drawings, installation procedure, O&M manual and as-built drawings. The assembly drawings, installation drawings, and installation procedure can be submitted for information purposes only. Shop drawings that detail components specifically fabricated for the project should be submitted for approval. Shop drawings for purchased components should be submitted for approval. They should include catalog cuts and sufficient information to determine compliance with the specifications.

6.2 Operation and Maintenance. The operation of a Corps of Engineer lock and dam falls directly under the responsibility of the on-site lockmaster. However, in executing its mission, everyone

connected with the project has a responsibility to improve safety and increase efficiency. All projects should be operated within the guidelines provided in the project O&M manual. The O&M manual should be continually updated to reflect all changes in operating procedures at the project. The manual should contain provisions to record equipment failures and to post maintenance records to enable operators to identify developing trends to avoid an unexpected failure.

As discussed in Chapter 4, automation of a lock and dam project can range from the simple manual start-auto stop of a single gate to the complete lockage and recording of a vessel without operator intervention. The appropriate level of automation for a project is a judgment made by all those involved with the project. As a minimum, new and electrically rehabbed projects should be operated with a Programmable Logic Controller (PLC) control system and Human Machine Interface (HMI) computer interface. In order to improve the effectiveness of the project, the process of locking a boat and operating a dam must be examined for inherent inefficiencies. The PLC is an excellent tool for monitoring such parameters. The PLC never forgets to log movement of equipment, or accurately record gate operating times and other parameters. Inefficiencies will become evident when such data is closely monitored. The time it takes for a vessel to approach the lock may seem to be based entirely upon the vessel operator, but the truth may be that the operation of the lock and dam has a lot to do with the length of time required for this process. Circumstances such as traffic light signaling, traffic queuing, outdraft, operation of the dam, inefficiencies in direction change, operation of adjacent locks, pleasure craft, and visibility may all cause a potential delay to traffic. Only careful monitoring of the process, along with these and other circumstances surrounding it, will present useful data to operations management. This data can be used to improve the operation of the project. Amount of improvement will vary by project but the information gathered will be useful knowledge to have and much of it will come for a one-time set up cost of programming the PLC to monitor particular portions of the project.

6.3 Inspection and Testing

6.3.1 General. Project specific inspection requirements, i.e., items to be inspected, inspection procedure and inspection frequency should be included in the O&M manual. These inspections are also included as part of the Periodic Inspection program as defined in ER 1110-2-100. Typical items include motors, brakes, gears, shafts, couplings, bearings, controls, limit and torque switches, hydraulic systems, wire rope, chain, structural base frames, emergency generators and any other integral parts that transmits the necessary power to operate a gate. Machinery should be inspected not only for its current condition, but also for its condition relative to the last inspection. The operation and maintenance procedures should be reviewed for their adequacy. Operational tests should be performed on a regular basis.

6.3.2 System Condition. The general condition and operation of the gate operating equipment should be observed. Operation should be smooth; any abnormal performance should be noted. Noise and vibration should also be noted and the source determined. The inspector

should report any unsafe or detrimental procedures followed by the operator that could cause injury to personnel or damage to the equipment. The condition of the paint system should also be recorded. Maintenance procedures should be in accordance with the O&M manual. Maintenance records should be reviewed with maintenance personnel. Maintenance procedures should include the periodic operation of equipment that sits idle for long periods of time.

6.3.3 Inspection Guidelines. The following are meant to be condensed guidelines for the major components of gate operating equipment.

6.3.3.1 Open Gearing. Open gearing should be inspected for alignment, including under/ over-engagement, and wear patterns away from the gear pitch line. Alignment problem indicators can predict bent shafting, misaligned bearings, loose mounting bolts, improperly fitted keys or eccentric loading. Excessive or abnormal wear of the tooth mating surfaces should be noted, including pitting, scoring, spalling, and plastic flow. Most tooth wear problems are related to improper fabrication or improper lubrication. Inspect the teeth, spokes, and hub for cracks, which may be the result of fabrication, heat treatment or mishandling during installation. Cracks are often obscured by a coating of paint. Examine lubrication quality and quantity. Meshing gear surfaces that are scarred in the areas from slightly below the pitch line to the tooth tips is an indication of lubrication failure. Check gear teeth for excessive backlash, pitch line mesh, dirt, and corrosion. Inspect all keys, keyways, retainer caps, and bolting materials for proper fit, alignment and tension.

6.3.3.2 Speed Reducers. Speed reducer housings and mounting base should be inspected for cracks. All seals and gaskets should be inspected for lubricant leaks. All fasteners should be inspected for corrosion and proper tension. After removing the inspection cover, the interior should be examined for signs of condensation, corrosion, general condition of the gears (see open gearing) excessive shaft movement, and excessive backlash. The lubricant level should be checked daily, while oil samples should be laboratory tested quarterly.

6.3.3.3 Shafts and Couplings. Shafting should be inspected for cracks, twist, bending, strain, and misalignment. Any suspicion of cracking or excessive strain should be verified by dye-penetrant testing. Bending can be estimated by the use of dial indicators. Coupling components should be examined for adequate lubrication, proper fastener tension, damaged keys, and improper alignment.

6.3.3.4 Bearings. Bearing housings, pedestals, and supports should be inspected for cracks and misalignment. Fasteners should be checked for tightness and corrosion. All bearings should be checked for condition and quantity of lubricant. Plain bearings (bushings) should be examined for excessive wear, using feeler gauges, as well as the condition of any seals, as applicable.

6.3.3.5 Brakes. All braking devices should be inspected for proper braking torque setting, and complete release at actuation. On shoe brakes, check brake wheels and shoes for wear, corrosion, misalignment and proper clearance at release. Linkages should be free but not loose. Check that there is no leakage at connections or seals on enclosed hydraulic disc brakes. All limit

switches should be tested for proper setting and actuation.

6.3.3.6 Hoist Motor. Motors should be inspected to insure that nothing is interfering with the motor ventilation. Any unusual noise or odor, such as from scorched insulation varnish, should be cause for more detailed inspection. Bearings should be examined for adequate lubrication, indications of wear (free movement), vibration, and seal leakage. The motor should be started several times to insure that it comes up to proper operating speed. Operation of winding heaters should be verified. Fasteners should be tight and in good condition.

6.3.3.7 Hydraulic System. All hydraulic components should be inspected for signs of leakage. All flexible hoses should be examined for deterioration, flaking, cracking, kinks, and wear. Hydraulic pumps should be checked for noise and vibration. Hydraulic fluid should be tested for viscosity, moisture content and other contamination. Hydraulic fluid should be sampled and analyzed at least quarterly. Filters, tank trappers, breathers and other devices should be examined for contaminants or replacement indication. Personnel should review maintenance records for filter and fluid changes at least quarterly. Hydraulic cylinders should be regularly inspected for misalignment, seal leakage, piston rod coating deterioration and proper function of associated valves. All valves should be inspected for loose locknuts, damaged handles, stems, or wiring connections. All limit switches, speed change switches and pressure switches should be tested for proper function. All pressure relief valve settings should be verified annually by an independent, properly calibrated pressure gauge. All flow rate settings should be verified. Seasonal changes to pump, valve or other equipment adjustable settings should be recorded in the maintenance records.

6.3.3.8 Machinery Supports. Machinery support frames should be inspected for cracking in the steel, grout pad and concrete. All welds should be examined for cracking. Any corrosion should be noted and scheduled for repair. Deformation of any steel members, or anchor bolts, should be cause for immediate analysis of the safety of continued operation. All drain holes should be clear such that there is no standing water.

6.3.3.9 Wire Rope, Drums and Sheaves. Wire rope, drums and sheaves should be inspected in accordance with the guidance provided in Corps of Engineers manual EM 1110-2-3200.

6.3.4 Test Operation of Equipment. ER 1110-2-100 requires at least annual operation of components that are vital to the safe operation of major Civil Works projects under emergency conditions. These components should be test operated using emergency power. The emergency power generator should be full load tested at more frequent intervals such as every other month to maintain its integrity. To satisfy these requirements, the standard operating procedure at most projects is to annually operate one third of the spillway gates through a full open and close cycle. Bulkheads or stop logs may need to be installed at the times when reservoir levels prohibit the full opening of the gates. This establishes a maximum interval between full travel tests of 3 years for each gate. Partial opening of the gates does provide some test benefits, but it is essential that full travel tests be performed to verify non-binding operation at all gate positions. A partial opening test of each gate should be conducted at least every year, except for the year that a full

travel test is scheduled. The gate should be raised as high as reservoir conditions allow without the use of bulkheads or stop logs. Additionally, gates and gate operating equipment should be test operated prior to a flood event.

6.4. Access for Inspection and Maintenance Activities. Designers and those responsible to review completed designs should ensure that access has been provided to inspect and maintain equipment and components. Planning this access should happen early in the design phase of the project and needs to be coordinated with the structural engineer and others responsible for the design and layout of the structure. The designer also needs to develop an inspection and maintenance plan and include that plan in the O&M manual.. The details of the plan needs to be coordinated with those responsible to operate and maintain the project. Details should include locations of removable inspection covers, permanent or portable access platforms, etc. Provide proper lighting and a safe working environment to perform the inspection and maintenance procedures.

GLOSSARY
Terms and Abbreviations

AFD – Adjustable Frequency (speed) Drive. See also VFD.

AIC – Amperes Interrupting Rating. Short circuit rating of electrical equipment.

ATA – Advanced Technology Attachment. The official name for the disk drive interface standard commonly known as Integrated Drive Electronics (IDE).

AUI – Attachment Unit Interface. A transceiver cable that provides a path between a node's Ethernet interface and the media access unit.

Automatic Lockage – Lockage of a vessel without operator intervention. The PLC system has devices to sense movement of the vessel and moves the lock machinery accordingly.
BNC – Bayonet-Neill-Concelman. A common connector for coaxial cable.

CCD – Charge-Coupled Device. A semiconductor technology used to build light-sensitive electronic devices such as cameras and image scanners.

CCTV – Closed Circuit Television.

CPU – Central Processing Unit. The main processor in a PC or PLC processor card.

CRT – Cathode Ray Tube.

DAT – Digital Audio Tape. A format for storing information on magnetic tape, developed in the mid-1980s by Sony and Philips.

DMA – Direct Memory Access. A facility of some architectures which allows a peripheral to read and write memory without intervention by the CPU.

DPI – Dots Per Inch. Refers to print density.

EIA – Electronic Industries Association.

EIDE – Extended Integrated Drive Electronics. An improved version of AT Attachment, with faster

data rates, 32 bit transactions, and (in some drives) DMA.

Emergency Hardwired – Pushbuttons, selector switches, and pilot lights that are directly wired to motor starters, solenoids, drives, etc. without any connection to the PLC system.

Emergency Lockage – Lockage of a vessel using the emergency hardwired system. Movement

of individual lock gates and valves without use of the PLC system.

EOT LS – End of Travel Limit Switch.

Gbps – Gigabits per Second. Billions of bits per second. A unit of information transfer rate.

GFE – Government Furnished Equipment.

GUI – Graphical User Interface. Also referred to as man-machine interface (MMI). The operating interface used to control a lock and dam.

I/O – Input/Output.

IDE – A disk interface standard based on the IBM PC ISA 16 bit bus but also used on other personal computers.

IEEE – Institute of Electrical and Electronic Engineers.

Internet – A three level hierarchy composed of backbone networks, mid-level networks, and stub networks interconnected with routers.

Intranet – Any network that provides similar services within an organization to those provided by the Internet outside it but which is not necessarily connected to the Internet.

IPC – Industrial Personnel Computer. Industrial hardened PC for use in harsh environments or process-critical applications. Uses passive backplane CPU mounting, extra fans with filters for additional cooling capacity, larger power supply, etc.

IPX – Internetwork Packet eXchange. Novell's protocol used by Novell Netware. A router with

IPX routing can interconnect Local Area Networks so that Novell Netware clients and servers can communicate.

ISA – Industry Standard Architecture. A bus standard for IBM-compatibles that extends the XT bus architecture to 16 bits.

ISDN – Integrated Services Digital Network. A set of communications standards allowing a single wire or optical fiber to carry voice, digital network services and video.

Keypad Controller – This device controls and programs the matrix switcher in the CCTV system. The device is used to switch the cameras between the monitors in the system. The device is equipped with a joystick to pan and tilt the moveable cameras and a pushbutton or lever to control the camera zoom.

LAN – Local Area Network. A data communications network which is geographically limited (typically to a 1 km radius) allowing easy interconnection of terminals, microprocessors and computers within adjacent buildings.

LCD – Liquid Crystal Display. An electro-optical device used to display digits, characters or images, commonly used in digital watches, calculators, and portable computers.

LED – Light-Emitting Diode. A type of diode that emits light when current passes through it.

Manual Lockage – Lockage of a vessel, via the PLC system, moving each gate and valve individually.

MB – Megabyte. 1024 kilobytes.

Mbps – Megabits per Second. Millions of bits per second. A unit of information transfer rate.

MCC – Motor Control Center.

MMI – Man-Machine-Interface. Also referred to as graphical user interface (GUI). The operating interface used to control a lock and dam.

NEMA – National Equipment Manufacturer's Association.

Network – An interconnection of computer systems, terminals, or data communications facilities.

NIC – Network Interface Card. An adapter circuit board installed in a computer to provide a physical connection to a network.
PC – Personal Computer. Standard desktop model.

PLC – Programmable Logic Controller. A computer-like device for controlling a system or process.

PLC Hardwired – Pushbuttons, selector switches, displays, and other operator interface devices that are directly wired to PLC inputs.

PPM – Pages per Minute.

PPP – Point-to-Point Protocol, Provides the Internet standard method for transmitting IP packets over serial point-to-point links.

PTZ – Pan/Tilt/Zoom. Functions included in a CCTV system.

RHNC – Relative Humidity Non-Condensing.

SAW – Surface Acoustical Wave. A type of touchscreen monitor.

SCSI – Small Computer System Interface. A processor-independent standard for system-level interfacing between a computer and intelligent devices including hard disks, floppy disks, CD-ROM, printers, and scanners.

SECC – Single Edge Contact Cartridge. The type of mounting configuration for Intel's Pentium II processor.

Semi-Automatic Lockage – Lockage of a vessel in two steps in which the operator initiates commands only after a vessel has moved. In general, one command prepares the downstream end of the lock for entry or exit, and one prepares the upstream end of the lock. The rest of the lockage equipment is moved by the PLC system.

SIMM – Single In-line Memory Module. A small circuit board or substrate with RAM integrated circuits or die on one or both sides and a single row of pins along one long edge.

SMA – Sub-Miniature Assembly. A type of fiber optic cable connector.

SNMP – Simple Network Management Protocol. The Internet standard protocol developed to manage nodes on an IP network.

ST – Straight Tip. A type of fiber optic cable connector.

TCP/IP – Transmission Control Protocol/Internet Protocol. The most common transport layer protocol used on Ethernet and the Internet.

µm – Micrometer or micron. Unit of measure for fiber optic cable dimensions.

UPS – Uninterruptible Power Supply. A (battery powered) power supply that is guaranteed to provide working voltage to a computer regardless of interruptions in the incoming electrical power.

VCR – Video Cassette Recorder.

VFD – Variable Frequency Drive. A type of motor drive that provides different speeds and torques based on frequency.

VHS – Video Home System. VC's video cassette format.

WAN – Wide Area Network. A network, usually constructed with serial lines, extending over distances greater than one kilometer.