Appendix F

Drawings

Courtesy Docks and Fishing Piers

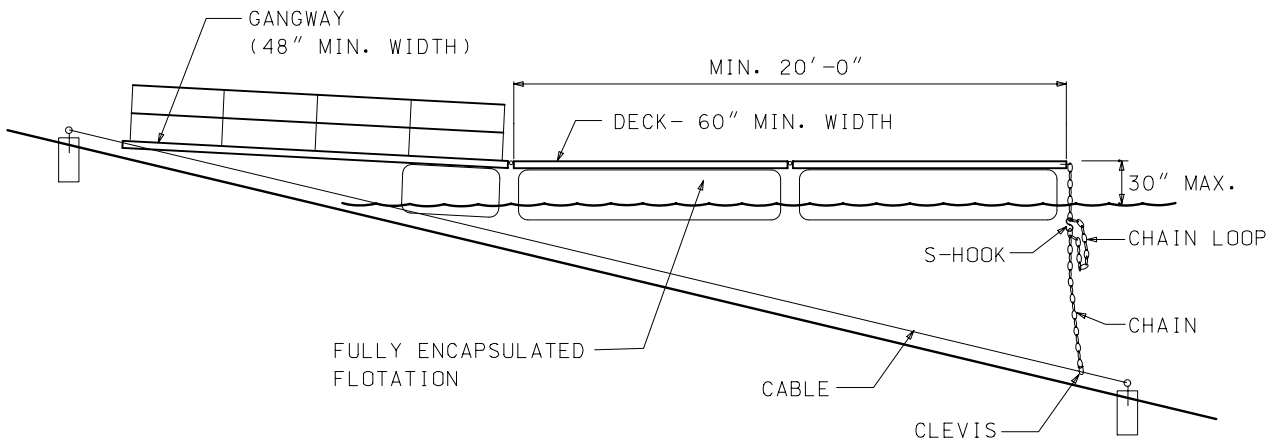

DRAWING NO. F-1
COURTESY DOCK

NOTES:
1. FOR GANGWAYS WITH SLOPE GREATER THAN 1:20, HANDRAILS ARE REQUIRED.
2. MAXIMUM HEIGHT FROM THE DECK TO WATER 30".
3. INSTALL DOCK STABILIZATION CHAIN ASSEMBLY TO KEEP DOCK IN PLACE.
4. SEE TABLE 5.9

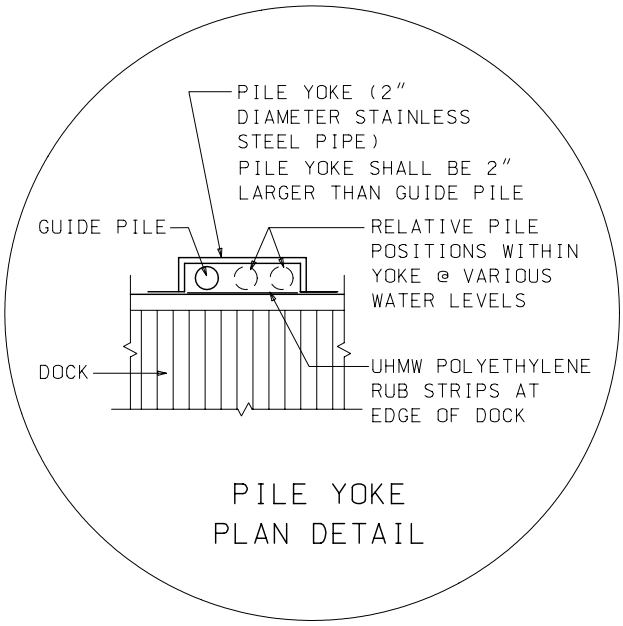

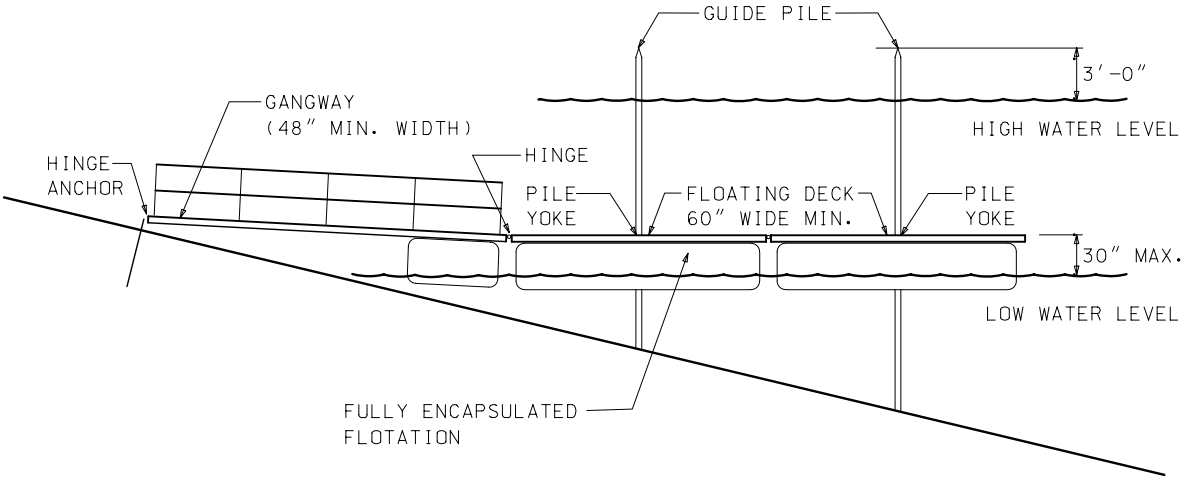

DRAWING NO. F-2
COURTESY DOCK WITH GUIDE PILE

NOTES:
1. THIS SYSTEM IS PARTICULARLY USEFUL WITH ANNUAL FLUCTUATIONS OF LESS THAN 20 FEET.
2. ALLOWS THE DOCK TO BE PERMANENTLY LOCATED AND IS SELF ADJUSTING TO CHANGING WATER LEVELS.
3. GUIDE PILE ELEVATION SHOULD BE A MINIMUM OF 3 FEET ABOVE ORDINARY HIGH WATER.
4. GUIDE PILE PLUMB TOLERANCE IS 1 INCH PER 10 FEET.
5. THE WIDTH OF PILE YOKE IS CALCULATED FROM WATER FLUCTUATION.
6. SEE TABLE 5.9

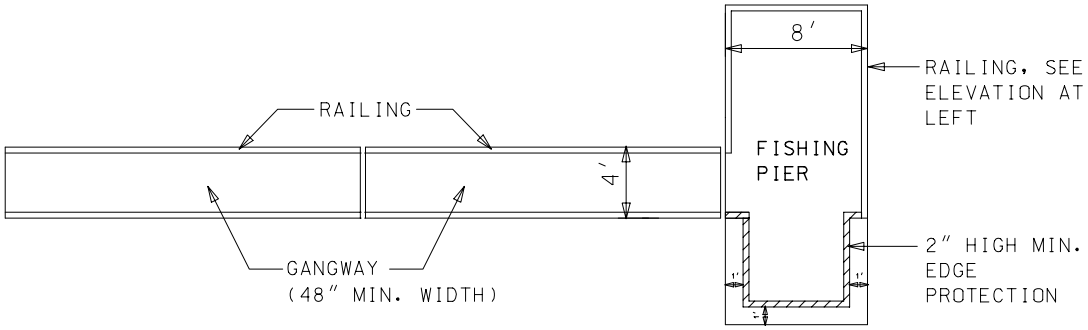

A – FISHING PIER PLAN

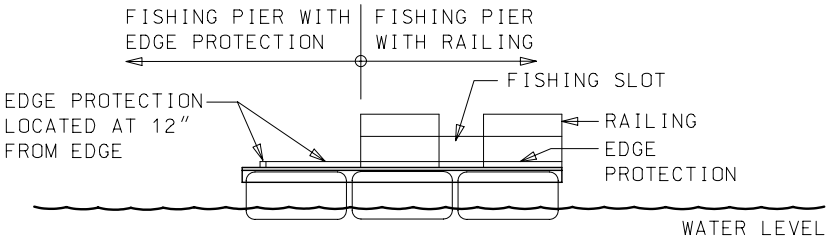

B – FISHING PIER ELEVATION

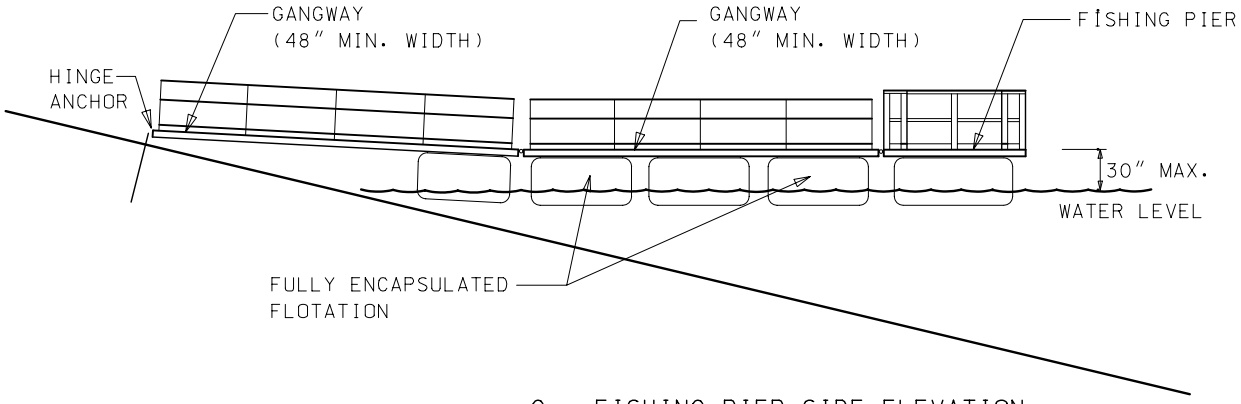

C – FISHING PIER SIDE ELEVATION

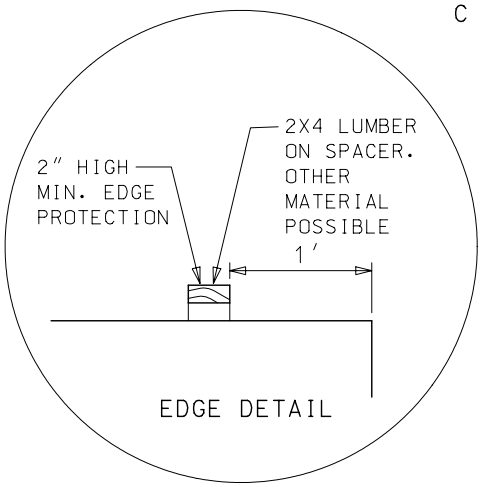

DRAWING NO. F-3
FISHING PIER

NOTES:
1. EDGE PROTECTION MUST BE PROVIDED
   -WHERE HANDRAILS ARE PROVIDED EDGE PROTECTION IS FLUSH WITH DECK EDGE.
   -WHERE HANDRAILS ARE NOT PROVIDED EDGE PROTECTION MUST BE INSET 12 INCHES FROM DECK EDGE.
2. AT LEAST 25% OF RAILING MUST BE 34″ MAXIMUM ABOVE DECK SURFACE.
3. SEE TABLE 5.9

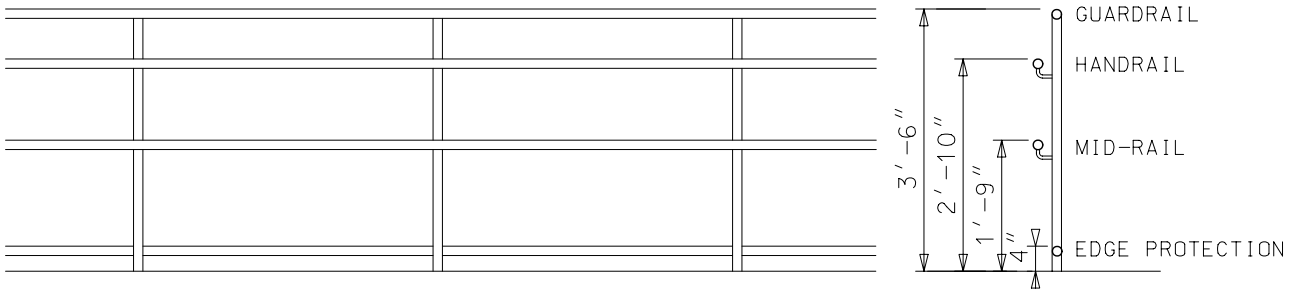

ELEVATION SECTION

A – GANGWAY RAIL

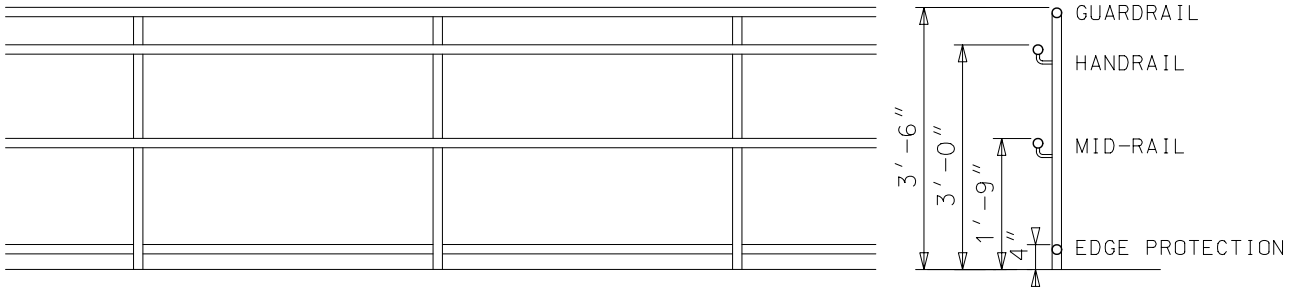

ELEVATION SECTION

B – PIER/DOCK/PLATFORM RAIL

DRAWING NO. F-4
HANDRAIL AND GUARDRAIL

NOTE:
1. GANGWAY HANDRAIL SHALL BE 34" ABOVE DECK.
2. PLATFORM HANDRAIL SHALL BE 36" ABOVE DECK.
3. SEE TABLE 5.9